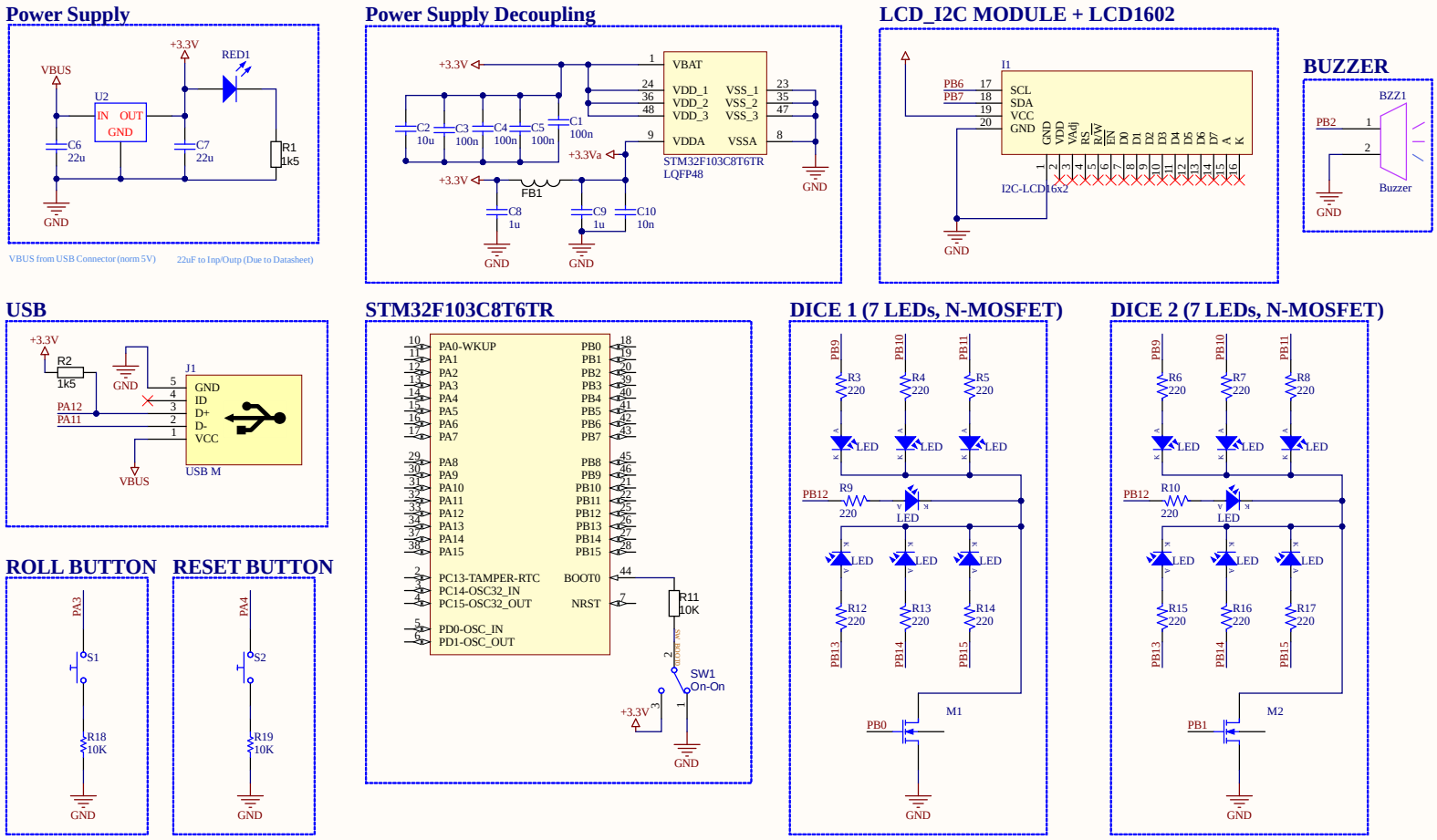

Title		
Size A3	Number	Revision
Date: 3/09/2026		Sheet of
File: C:\Users\..\Connectors.SchDoc		Drawn By: