Laboratory 1:

RTL DESIGN

OBJECTIVES

- Understand and apply the digital logic simulation workflow in VLSI design using **Cadence Xcelium**, including compilation, simulation execution and result analysis to verify logic correctness.
- Use **SimVision** for waveform visualization, signal analysis, and debugging during the **Logic Design** phase of the VLSI design process.

PREPARATION FOR LAB 1

- Understand the concept of RTL (Register Transfer Level) design.
- Read the server access guide and the user guides for the Xcelium and SimVision tools.

REFERENCE

1. Intel FPGA training

Note:
In this lab, the use of arithmetic operators (+, -, *, /, modulo) in hardware description is not allowed.

Laboratory 1:

RTL DESIGN

EXPERIMENT 1

Objective: Know how to program a system to add the value of an input A to itself repeatedly.

Description: The circuit in Figure 1, which is often called an *accumulator*, is used to add the value of an input *A* to itself repeatedly. The circuit includes a carry out from the adder, as well as an *overflow* output signal. If the input *A* is considered as a 2's-complement number, then *overflow* should be set to 1 in the case where the output *sum* produced does not represent a correct 2's-complement result.

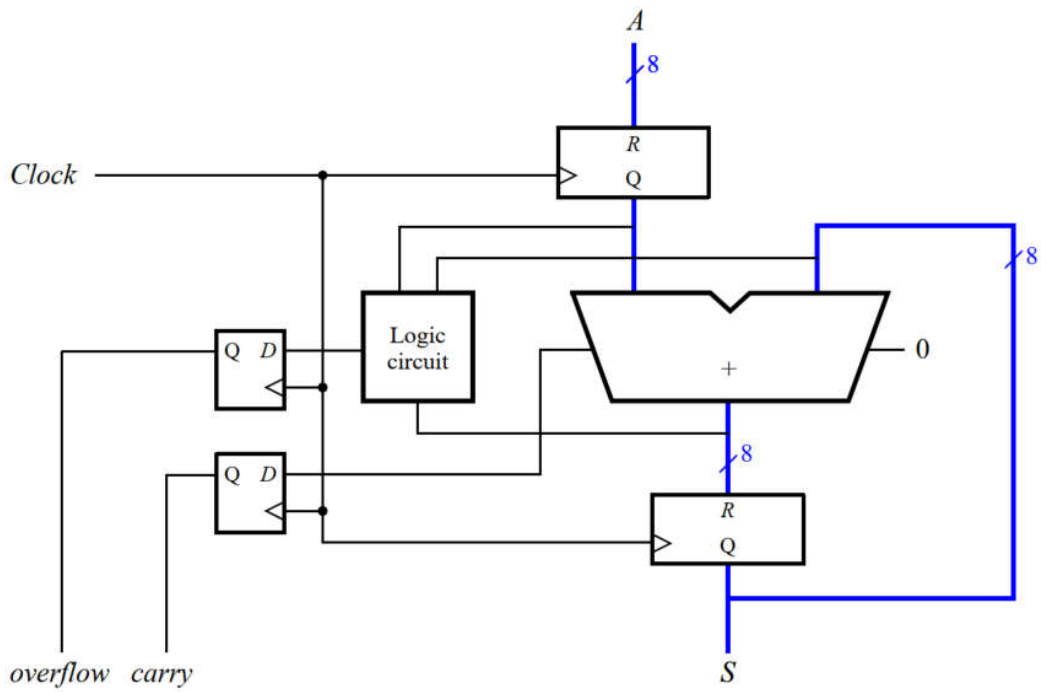

Figure 1: An eight-bit accumulator circuit.

Instruction:

- There are two ways to detect overflow for 2's complement:

  - Compare inputs and outputs: The inputs and outputs always have the same sign. If not, the overflow must be set.

  - Compare carry bits: The circuit for checking overflow of 8-bit adder is shown in the example below.

Laboratory 1:

RTL DESIGN

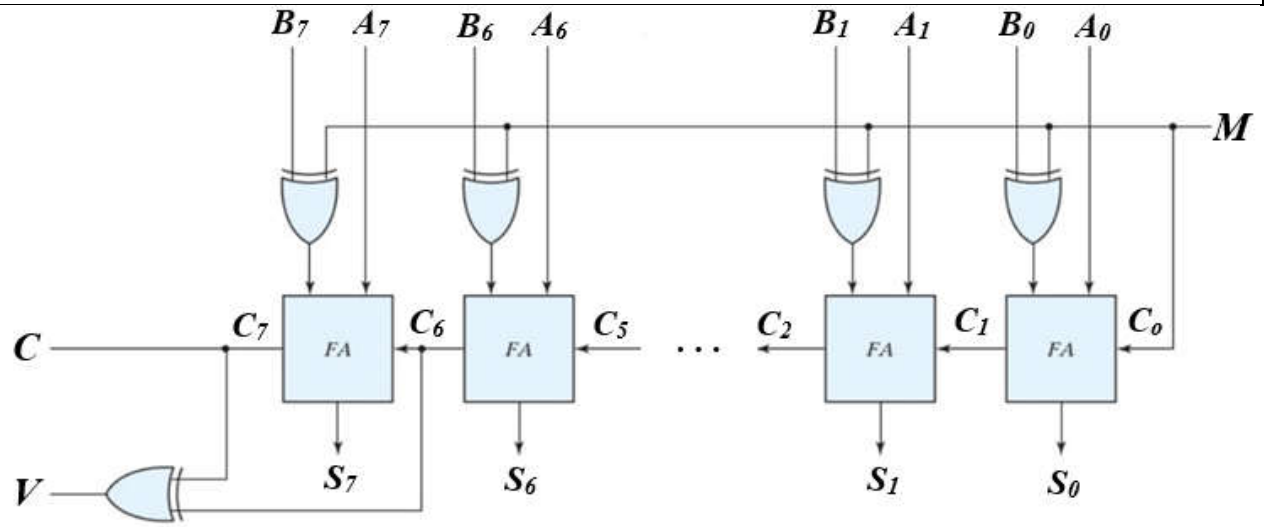

In the figure, C is the carry out flag and V is the overflow flag.

Requirements:

- Draw your design circuit.
- Write System Verilog HDL code to describe the circuit given in Figure 1.
- Write a testbench for the logic circuit with the requirement to test all typical (especially special) cases of the circuit.

Your report has to show two results:

- Draw your design circuit.
- Describe the operation of the circuit.
- The waveform to **prove the circuit** works correctly. You must show all the typical cases of overflow flag and carry flag.

Laboratory 1:

RTL DESIGN

EXPERIMENT 2

Objective: Know how to program a system to add or subtract the value of an input A to itself repeatedly.

Requirements:

- Extend the circuit from Experiment 1 to be able to both add and subtract numbers. To do so, add an *add_sub* input to your circuit. When *add_sub* is 1, your circuit should subtract *A* from register *S*, and when *add_sub* is 0 your circuit should add *A* to register *S* as in experiment 1.
- Draw your design circuit.
- Write System Verilog HDL code to describe your circuit.
- Write a testbench for the logic circuit with the requirement to test all typical (especially special) cases of the circuit.

Your report has to show three results:

- Draw your design circuit.
- Describe the operation of the circuit.
- The waveform to **prove the circuit** works correctly. You must show all the typical cases of overflow flag and carry flag.

Laboratory 1:

RTL DESIGN

EXPERIMENT 3

Objective: Know how to design a circuit that finds the larger and smaller numbers between two 8-bit numbers.

Description: The circuit in Figure 3 is an example of a design that determines the larger and smaller values between two 8-bit numbers. The circuit is built using one comparator and two multiplexers. The comparator provides the select signal for the multiplexers' outputs.

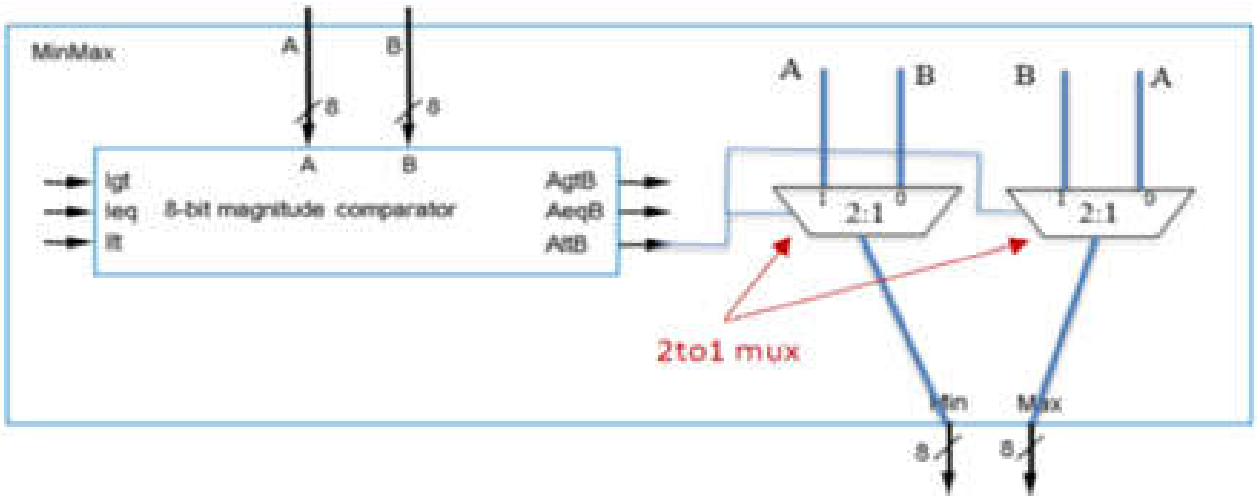

Figure 3: 8-bit comparator circuit for determining the larger and smaller values.

Requirements:

- Draw your design circuit.
- Write System Verilog HDL code to describe your circuit.
- Write testbench to test the your circuit.

Your report has to show three results:

- Draw your design circuit.
- Describe the operation of the circuit.
- The waveform to **prove the circuit** works correctly. You must show all the typical cases of the circuit.

Laboratory 1:

RTL DESIGN

EXPERIMENT 4

Objective: Know how to program ALU circuit with registered inputs and outputs.

Desription: The circuit in Figure 4 shows an ALU circuit with registered inputs and outputs. The ALU can implement add, subtract, find maximum and minimum depending on *Sel* input which is shown in Table 1. Write System Verilog code to implement this system.

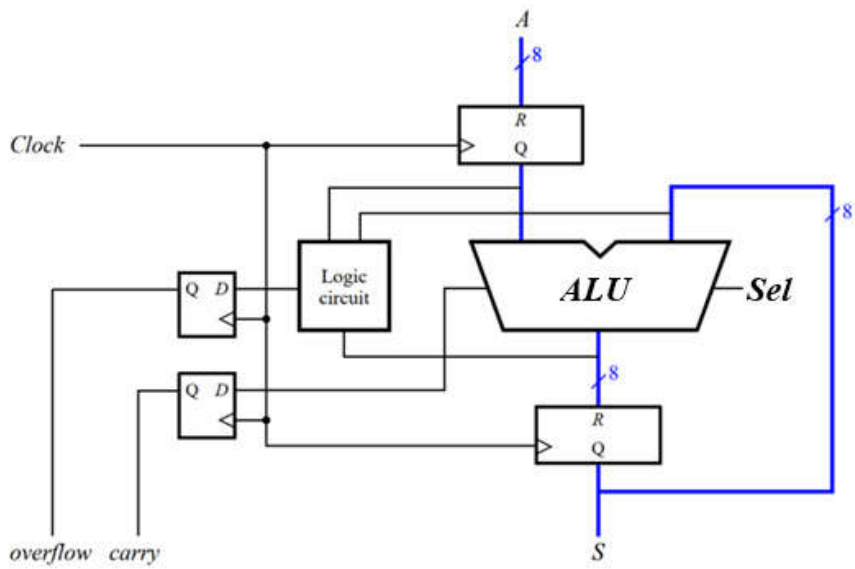

Figure 4: A registered ALU circuit.

Sel Input	ALU operator
00	Add
01	Subtract
10	Maximum
11	Minimum

Table 1: Operation of ALU circuit.

Requirements:

- Draw your design circuit, especially inside the ALU.
- Write System Verilog HDL code to describe your circuit.
- Write testbench to test the your circuit.

Your report has to show three results:

- Draw your design circuit.

- Describe the operation of the circuit.
- The waveform to **prove the circuit** works correctly. You must show all the typical cases of the circuit.