Laboratory 5:

Layout of Basic Standard Cells

OBJECTIVES

- The objective of this lab is for students to perform the complete digital design flow from layout design → post-layout simulation using **Cadence Virtuoso**.
- After completing the circuit design process, students proceed to the layout design phase using the **Cadence Virtuoso Layout Suite** and perform DRC and LVS verification using **PVS**.

PREPARATION FOR LAB 5

- Understand the concept and design flow of basic standard cell circuits.
- Read the server access guide and the user guides for the Cadence Virtuoso.
- Read layout reference file to understand how to Cadence Virtuoso to design layout, run post-layout simulation and measure post-layout parameters.
- Read file *GPDK045_design_rule* to understand the layout rules for digital circuits using 45 nm technology.

REFERENCE

Note: In this 251 semester, notice that the PDK will be used is GPDK045 by TSMC Foundry. The document for layout is designed for the FreePDK45; the layout instruction for the PDK45 will be released later. Thank you!

Laboratory 5:

Layout of Basic Standard Cells

EXPERIMENT 1

Objective: Perform layout design for a CMOS NOT logic gate.

Description: In this experiment, we perform layout design for a CMOS NOT logic gate. We did the circuit design process in Lab 4. Students design layout for this logic gate.

The sizing for each NMOS and PMOS (width/length/finger=120n/45n/2).

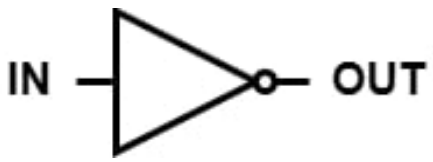

Figure 1a: The symbol of an inverter

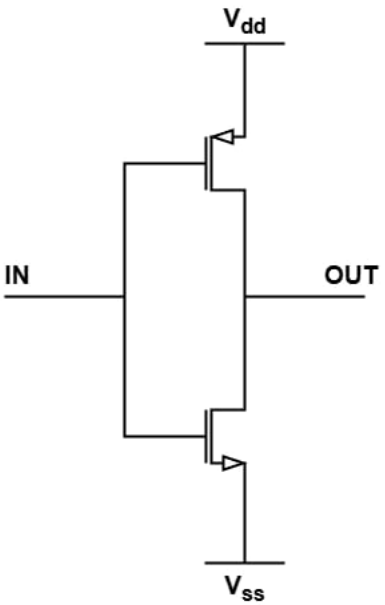

Figure 1b: The schematic of a CMOS inverter

Requirements:

- Use Cadence Virtuoso Layout Suite XL to create logic gate, need to show layout DRC and LVS violations when you run these for the first time and how your group fixes these violations, need to specify every step when laying out the logic gate.
- Your report should include images of the final layout (e.g., Figure 1) and the DRC/LVS reports.

Laboratory 5:

Layout of Basic Standard Cells

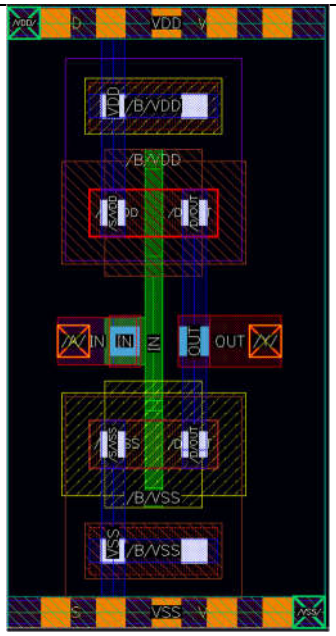

Figure 1: The complete layout of a CMOS inverter ***with 1 finger***

Laboratory 5:

Layout of Basic Standard Cells

EXPERIMENT 2

Objective: Perform layout design for CMOS NOR, NAND and XOR logic gates.

Description: In this experiment, we perform layout design for CMOS NOR, NAND and XOR logic gates. We did the circuit design process in Lab 4. Students design layout for these logic gates.

The sizing for each NMOS and PMOS (width/length/finger=120n/45n/2).

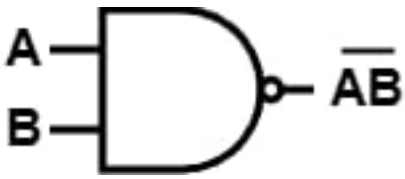

Figure 2a: The symbol of a NAND gate

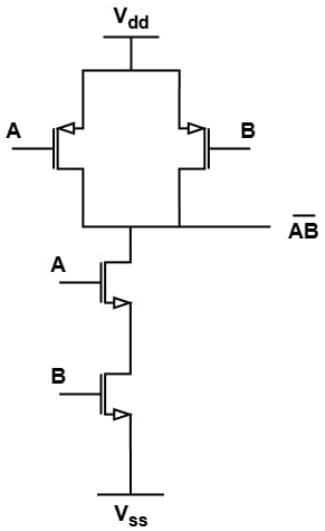

Figure 2b: The schematic of a CMOS NAND gate

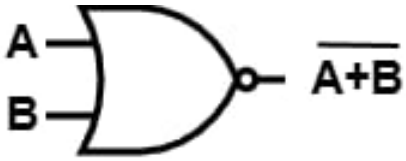

Figure 3a: The symbol of a NOR gate

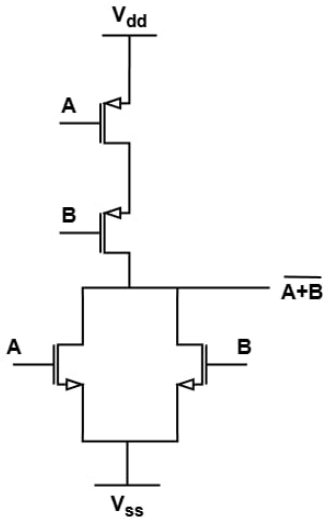

Figure 3b: The schematic of a CMOS NOR gate

Laboratory 5:

Layout of Basic Standard Cells

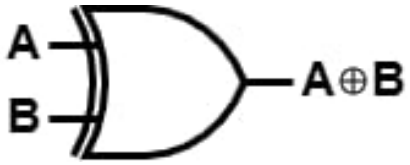

Figure 3a: The symbol of a XOR gate

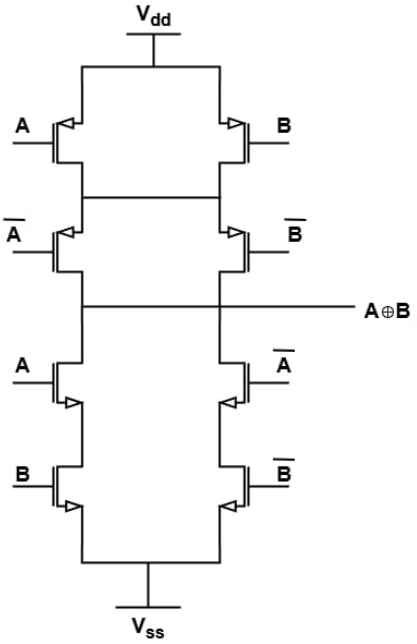

Figure 3b: The schematic of a CMOS XOR gate

Requirements:

- Use Cadence Virtuoso Layout Suite XL to create logic gate layout (each schematic must have a corresponding layout), need to show layout DRC and LVS violations when you run these for the first time and how your group fixes these violations, need to specify every step when laying out the logic gate.
- Your report should include images of the final layout and the DRC/LVS reports.

Laboratory 5:

Layout of Basic Standard Cells

EXPERIMENT 3

Objective: Perform layout design for a CMOS MUX circuit.

Description: In this experiment, we perform layout design for CMOS MUX circuit. We did the circuit design process in Lab 4. Students design layout for these circuits.

The sizing for each NMOS and PMOS (width/length/finger=120n/45n/2).

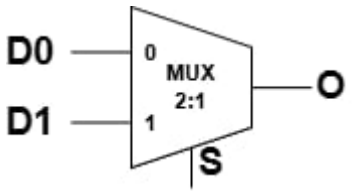

Figure 5a:
The symbol of MUX

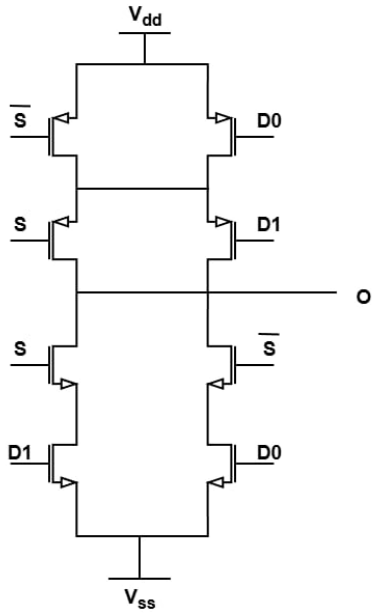

Figure 5b:
The schematic of MUX

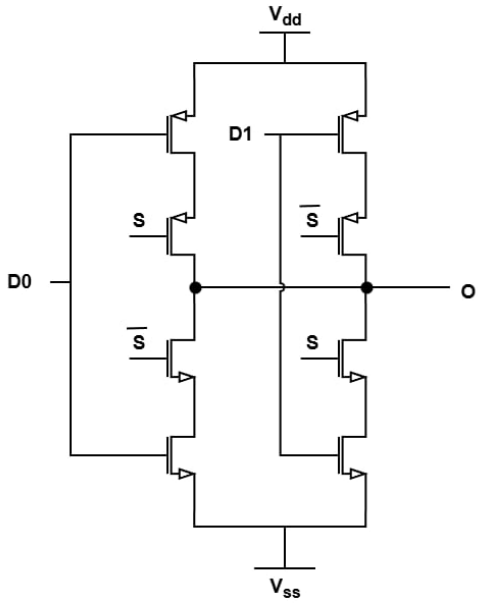

Figure 5c:
The schematic of MUX

Requirements:

- Use Cadence Virtuoso Layout Suite XL to create logic gate layout (each schematic must have a corresponding layout), need to show layout DRC and LVS violations when you run these for the first time and how your group fixes these violations, need to specify every step when laying out the logic gate.
- Your report should include images of the final layout and the DRC/LVS reports.