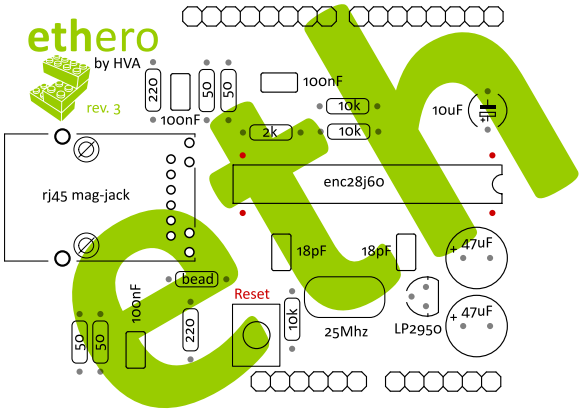
ethero
by HVA
rev. 3
220
50
50
100nF
100nF
10k
10k
2k
10uF
rj45 mag-jack
enc28j60
18pF
18pF
47uF
bead
Reset
10k
25Mhz
LP2950
47uF
100nF
50
50
220

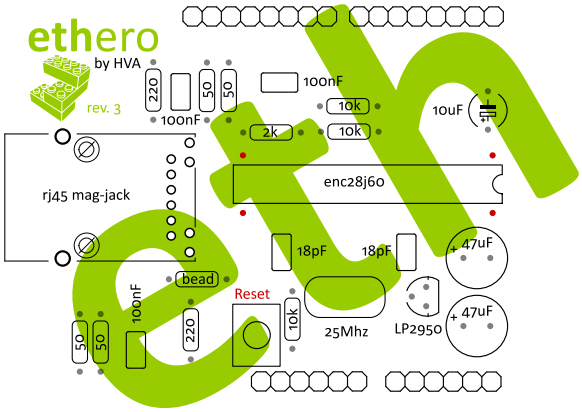
ethero
by HVA
rev. 3
220
50
50
100nF
100nF
10k
10k
2k
10uF
rj45 mag-jack
enc28j60
18pF
18pF
47uF
bead
Reset
10k
25Mhz
LP2950
47uF
100nF
50
50
220

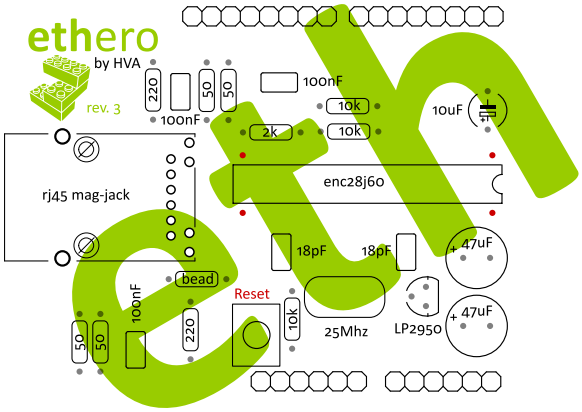
ethero
by HVA
rev. 3
220
50
50
100nF
100nF
10k
10k
2k
10uF
rj45 mag-jack
enc28j60
18pF
18pF
47uF
bead
Reset
10k
25Mhz
LP2950
47uF
100nF
50
50
220

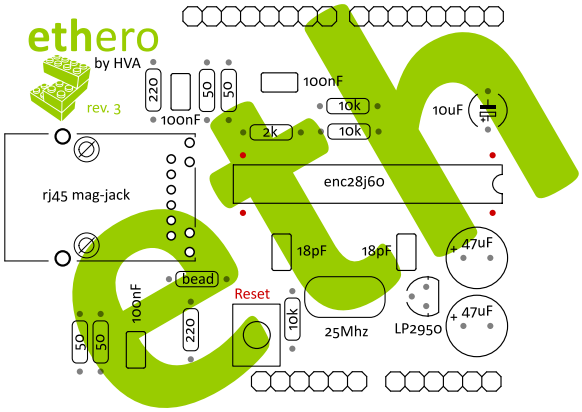
ethero
by HVA
rev. 3
220
50
50
100nF
100nF
10k
10k
2k
10uF
rj45 mag-jack
enc28j60
18pF
18pF
47uF
bead
Reset
10k
25Mhz
LP2950
47uF
100nF
50
50
220

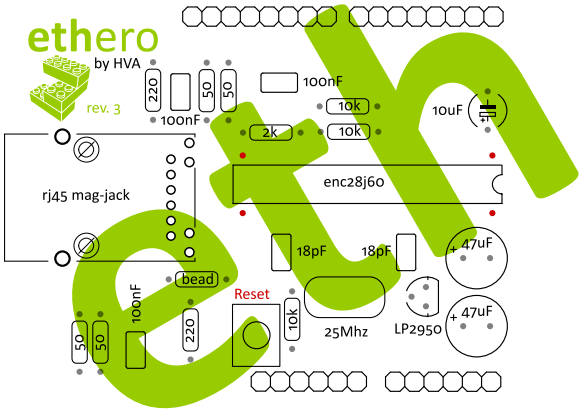
ethero
by HVA
rev. 3
220
50
50
100nF
100nF
10k
10k
2k
10uF
rj45 mag-jack
enc28j60
18pF
18pF
47uF
bead
Reset
10k
25Mhz
LP2950
47uF
100nF
50
50
220

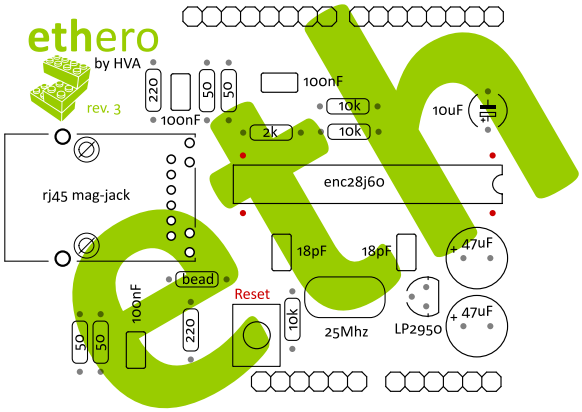
ethero
by HVA
rev. 3
220
50
50
100nF
100nF
10k
10k
2k
10uF
rj45 mag-jack
enc28j60
18pF
18pF
47uF
bead
Reset
10k
25Mhz
LP2950
47uF
100nF
50
50
220