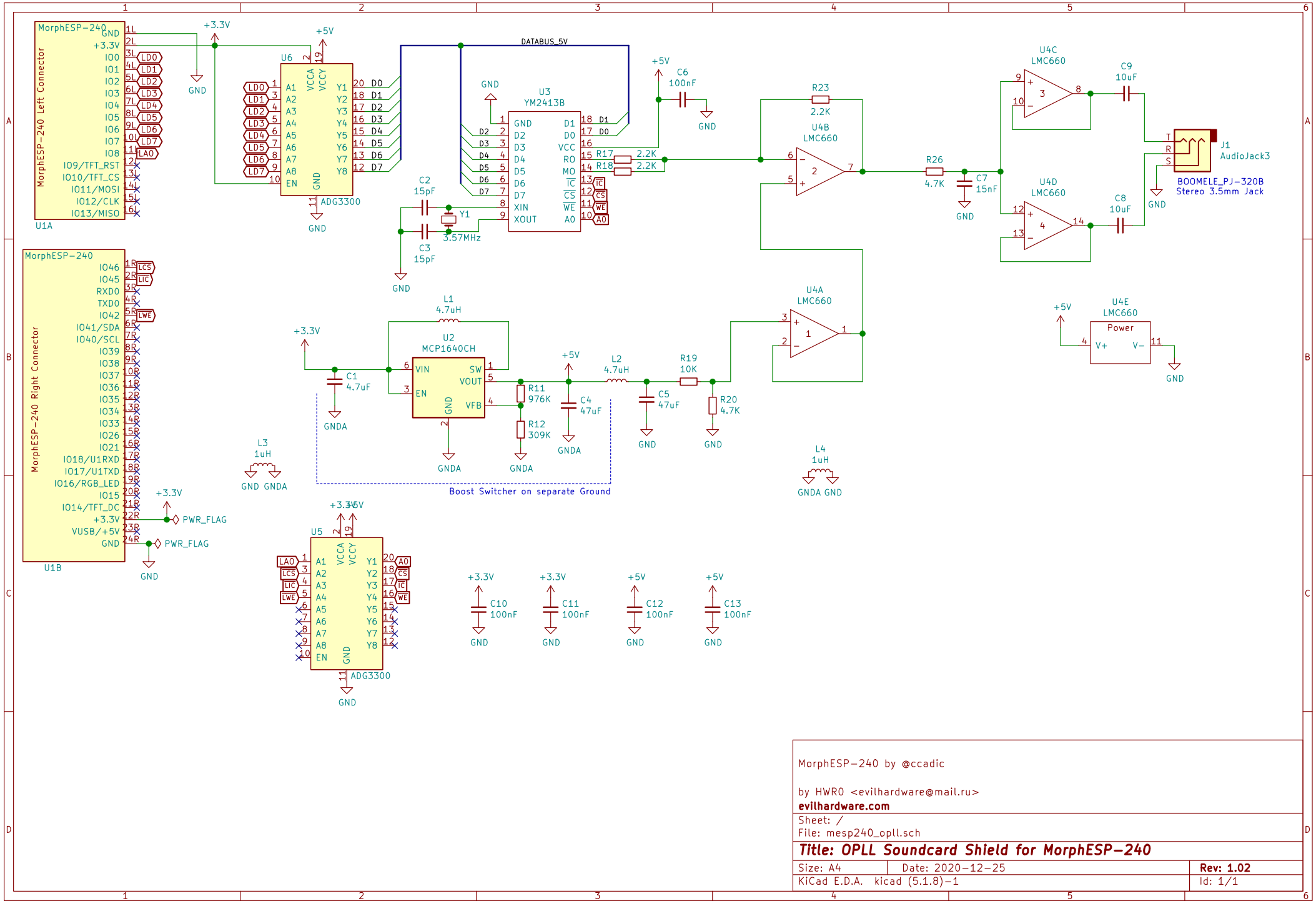

MorphESP-240 by @ccadic

by HWR0 <evilhardware@mail.ru>
evilhardware.com

Sheet: /
File: mesp240_opll.sch

Title: OPLL Soundcard Shield for MorphESP-240

Size: A4	Date: 2020-12-25	**Rev: 1.02**
KiCad E.D.A. kicad (5.1.8)-1		Id: 1/1