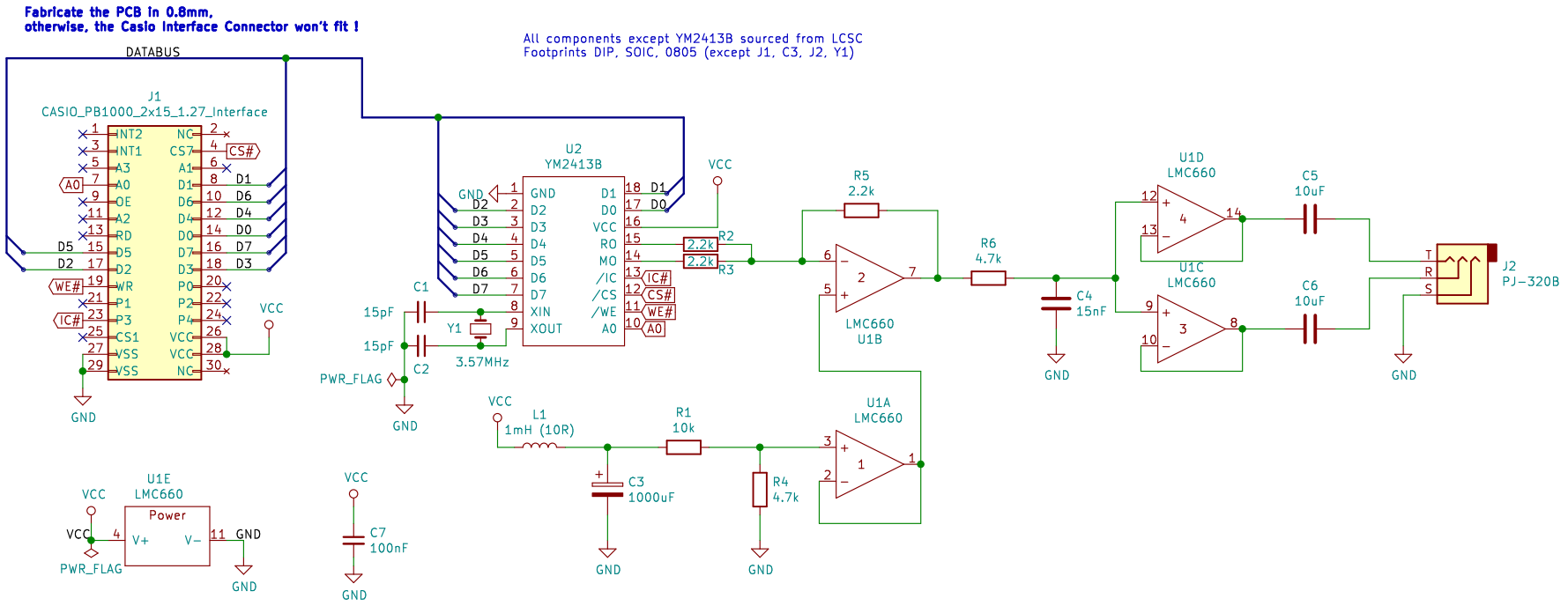

by HWR0[evilhardware(at)mail.ru]
based on the first design from 'Miyura' 2010

unverified as of 14.01.2020

Sheet: /
File: CASIO PB-1000 YM2413 Soundcard.sch

Title: Casio PB-1000 OPLL YM2413B Soundcard

Size: A4	Date: 14.01.2020	Rev: v1.1
KiCad E.D.A. kicad (5.1.5)-3		Id: 1/1