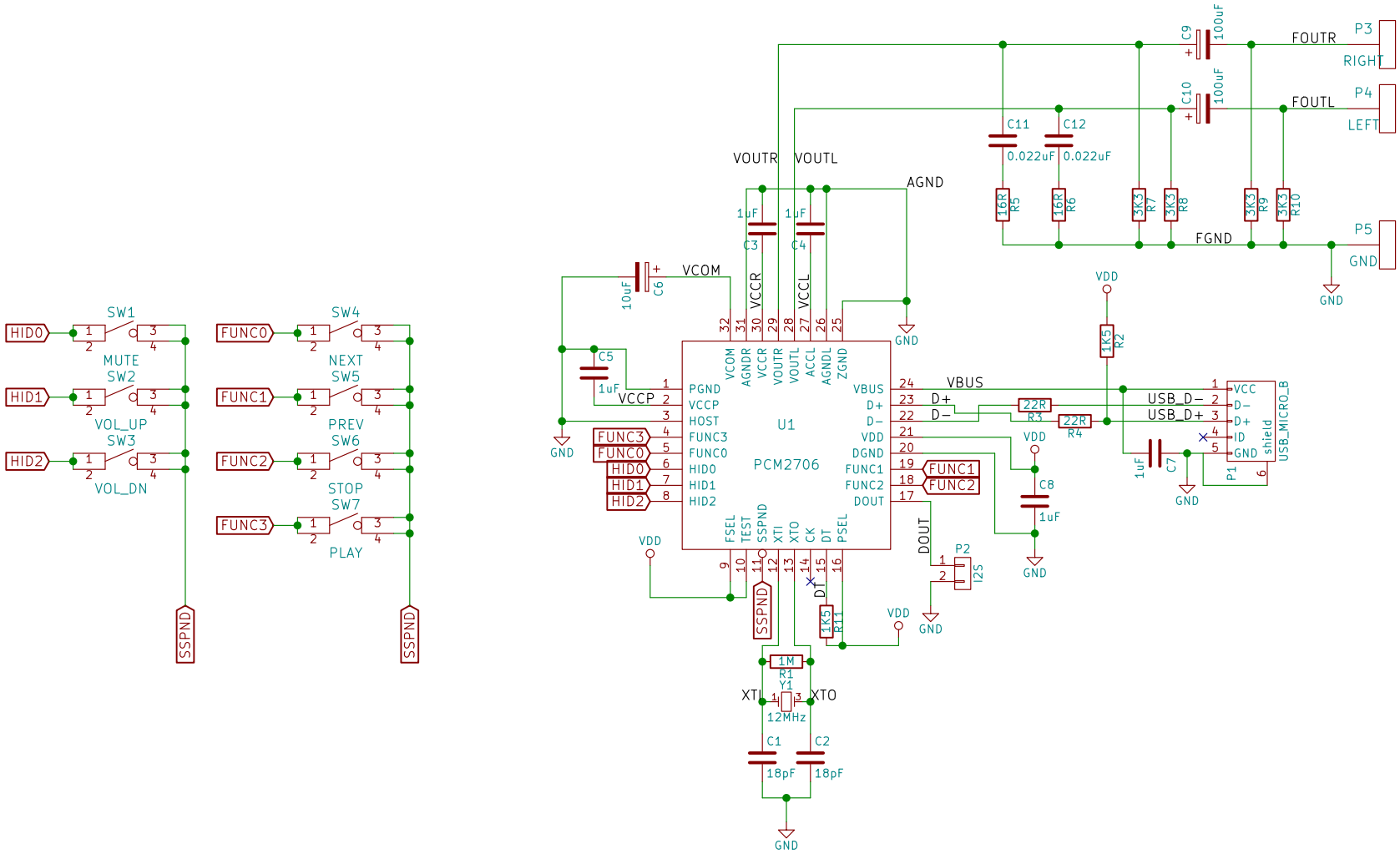

Licensed Under CERN OHL 1.2

Jacob Creedon

Sheet: /

File: SIUSBSC.sch

Title: Square Inch USB Sound Card

Size: USLetter	Date: 2015-11-27	**Rev: 1.00**
KiCad E.D.A. kicad 4.0.0-rc2-stable		Id: 1/1