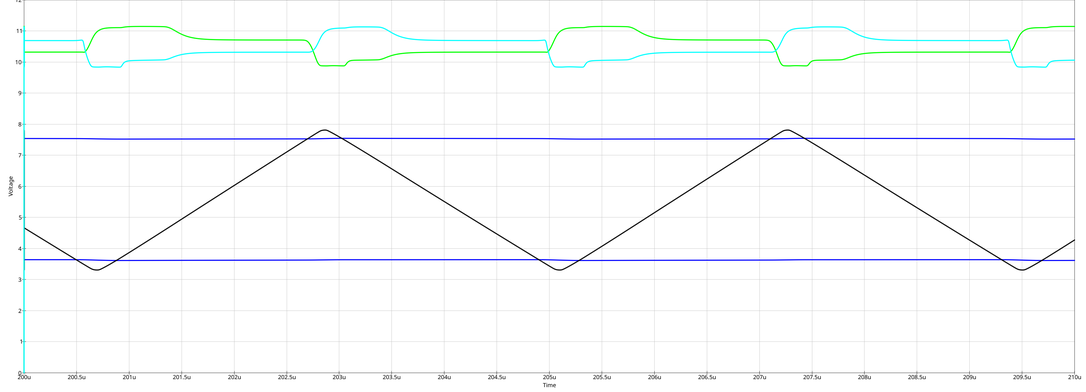


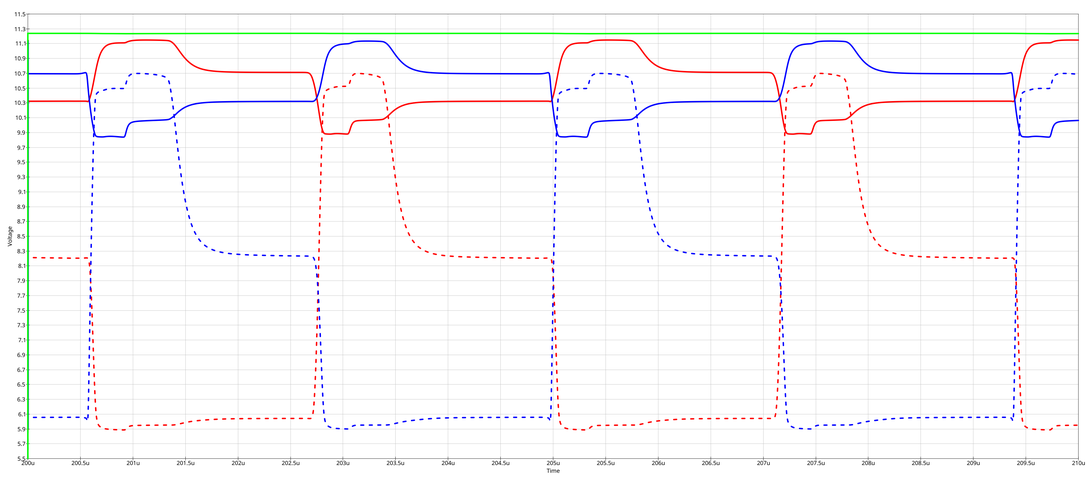


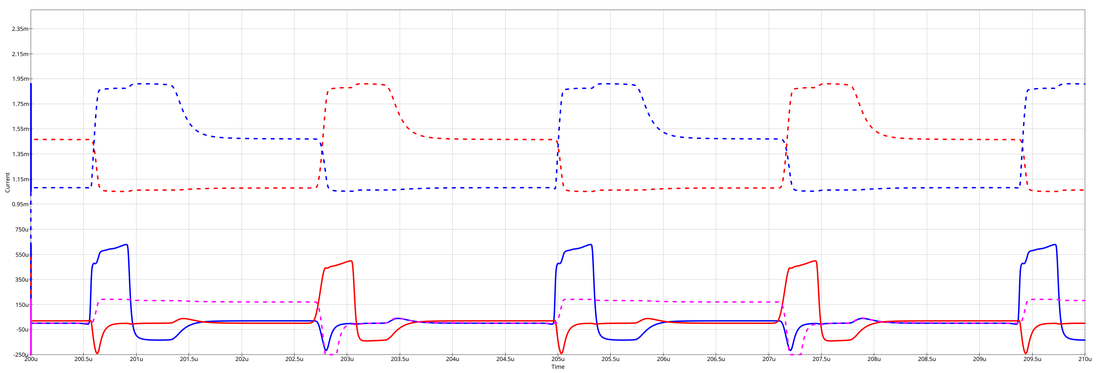


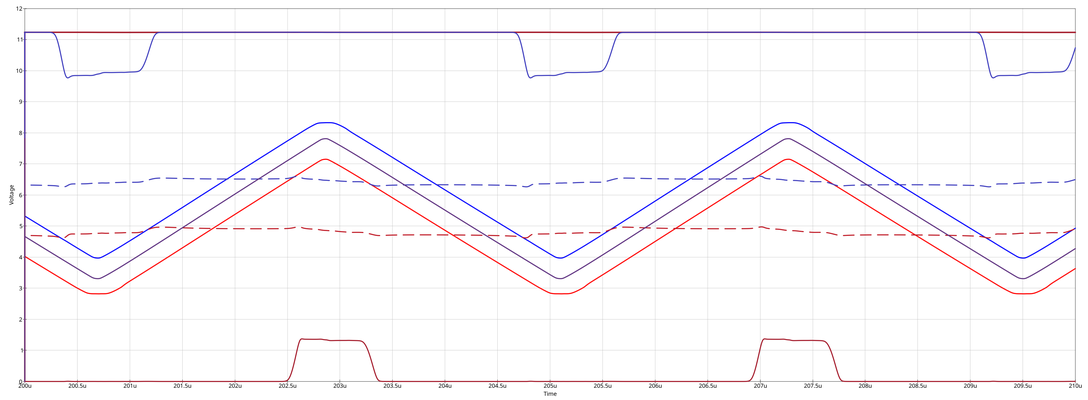


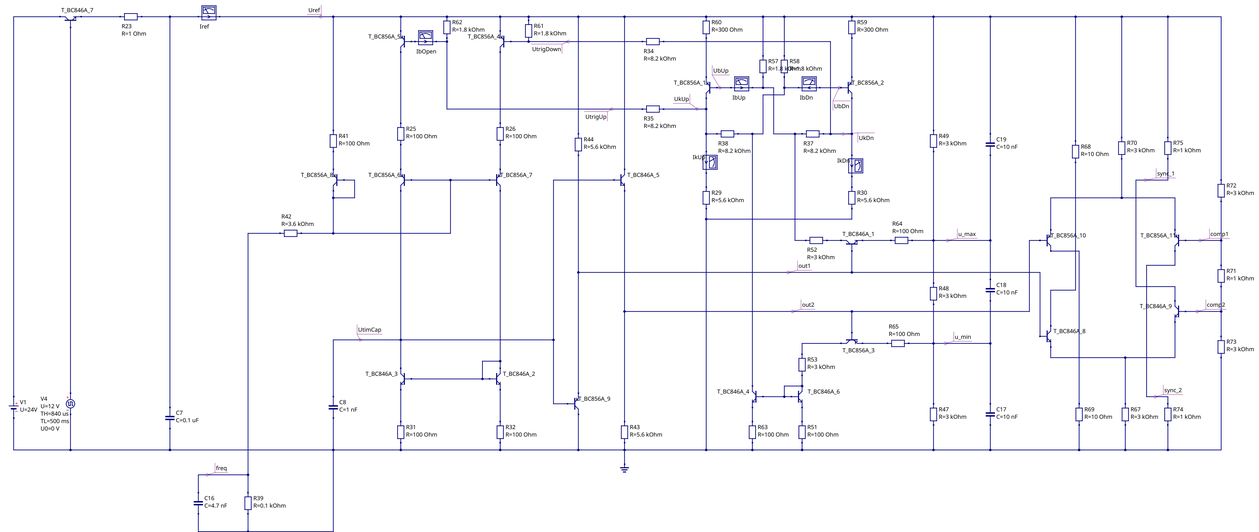


transient
simulation
TR1
Type=lin
Start=0
Stop=1000 us