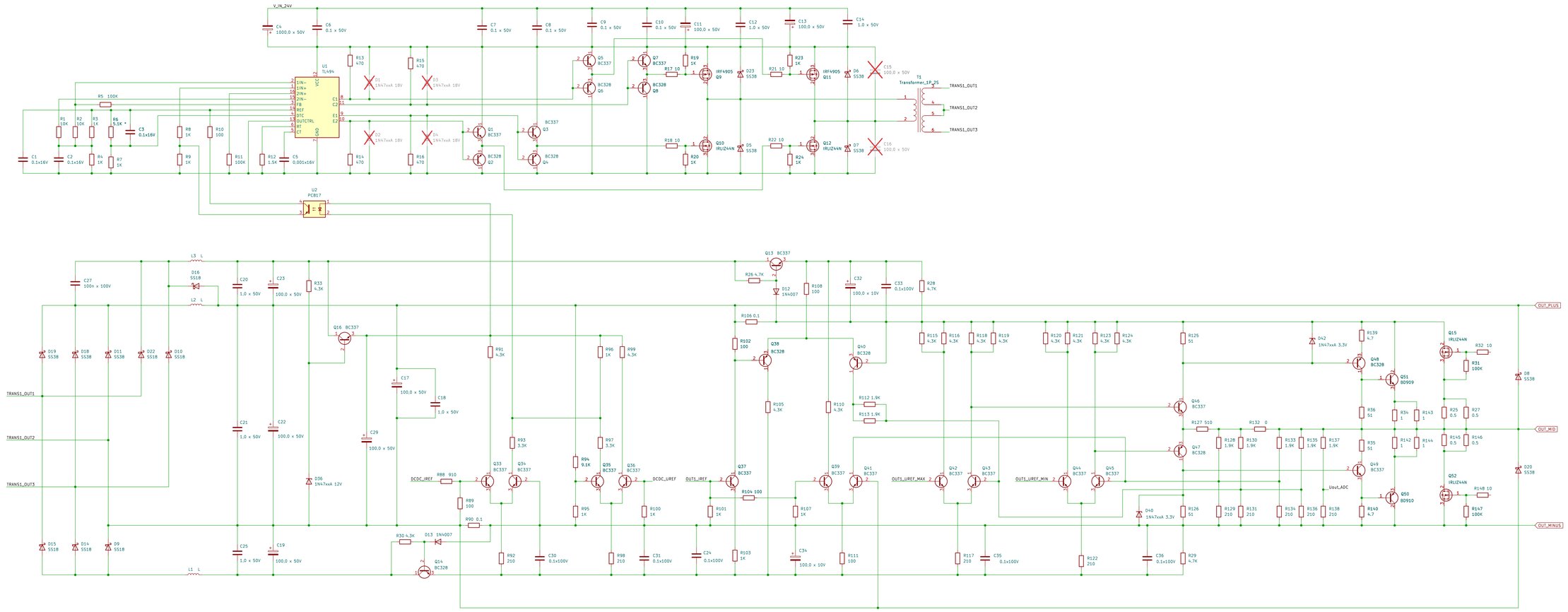

Modes of operation

1. Linear mode dual power supply
OUT_PLUS – Power supply "+"
OUT_MID – Power supply "0/GND"
OUT_MINUS – Power supply "-"

2. Pulse mode power supply
OUT_PLUS – Power supply "+"
OUT_MINUS – Power supply "0/GND"

3. Signal generator mode
OUT_MID – Signal generator "OUT"
OUT_GND – Signal generator "GND"

Project: Radio Amateur Lab (Power Supply, Soldering Station)
© Evgeny Sobolev 09.02.1984, sub Yaroslavl, Russia
International Passport TR 1375783
Tel.: +79003030374

State: Prototyping (08.03.2026)

Sheet: /
File: PowerSupply.kicad_sch

Title:

Size: A1	Date:	Rev:
KiCad E.D.A. 9.0.2		Id: 1/1