Version	Date	Author	Change Note	Approved
V21	20180708	XieXiaoMin	见附件：PinebookPro_V21项目修改评审记录.docx 充电电流参数更改，PD充电电路优化 键盘控制IO加密功能修改：初始化为高阻，启用时为低电平 1.增加Q15，R151 实现高电平通，低电平断。控制麦克风的电源 2.增加D13.实现高电平不干扰WIFI功能，低电平使WIFI无法打开 3.增加D14.实现高电平不干扰USB摄像头的工作，低电平使摄像头的电源打不开 增加U7005 EEPROM 保存键盘状态 增加工作状态灯IO使能控制，Standby LED：GPIO0_A2，Work LED：GPIO0_B3 LCD电源增加MOS管控制，控制IO口为GPIO1_C6，初始化状态为高，休眠时拉低	WenXue

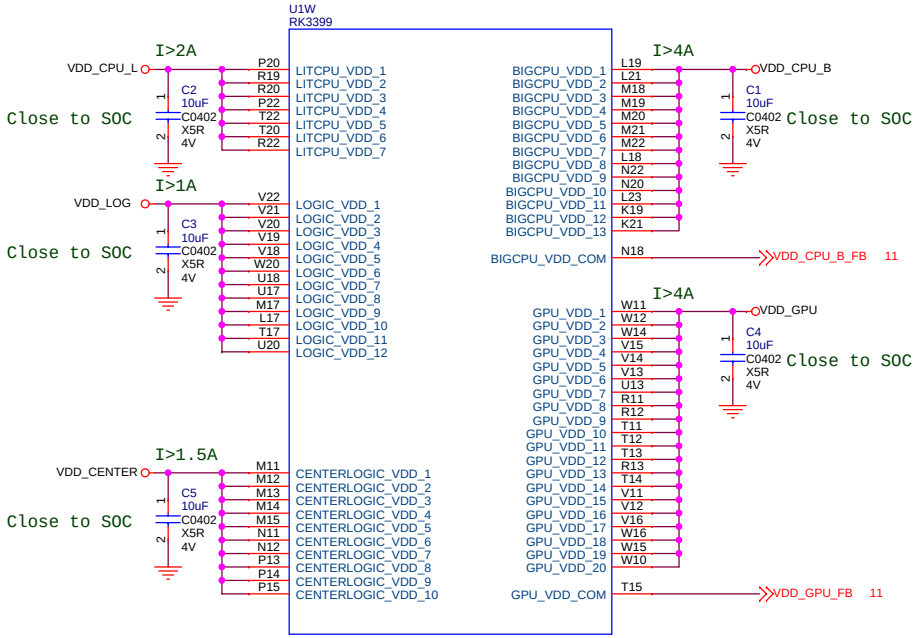

Note:Power filter CAP please place back of SOC or close to SOC

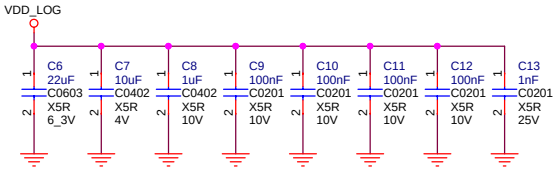

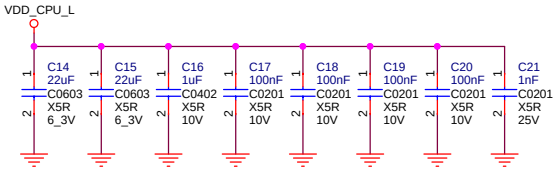

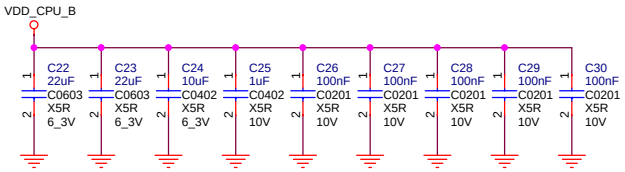

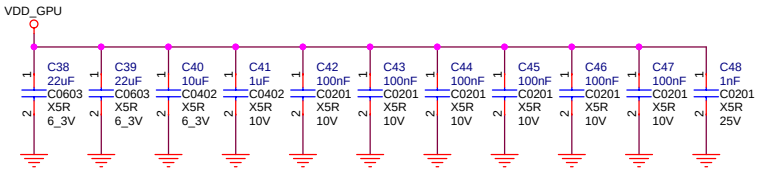

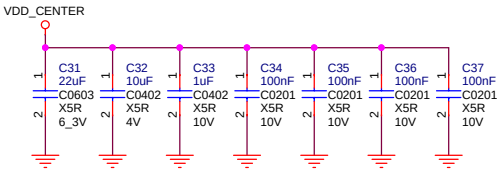

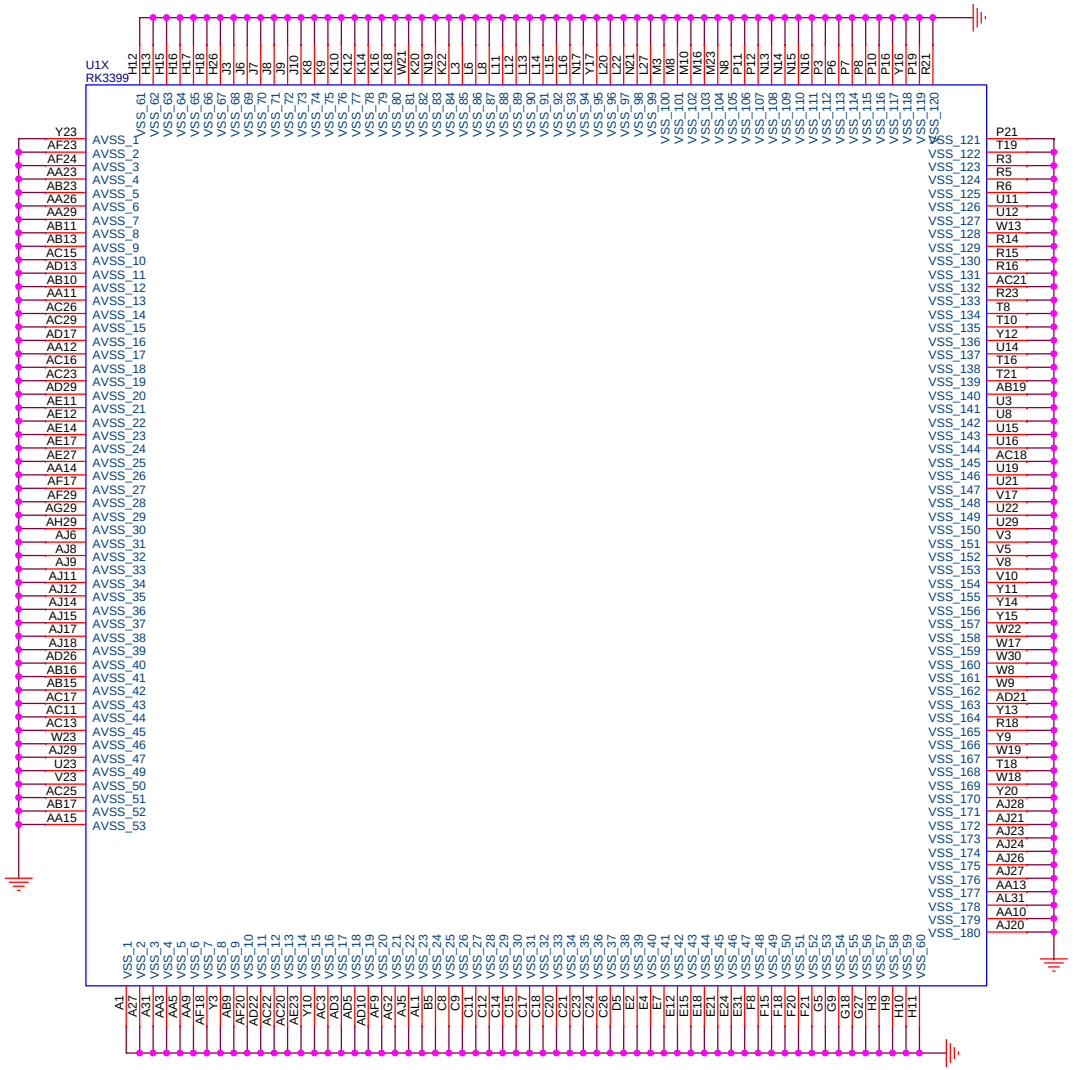

PINE64		
Title: Pinebook Pro		
Size: A3	Document Number: RK3399 POWER	Rev: V2.1
Date:	Sheet 1 of 23	

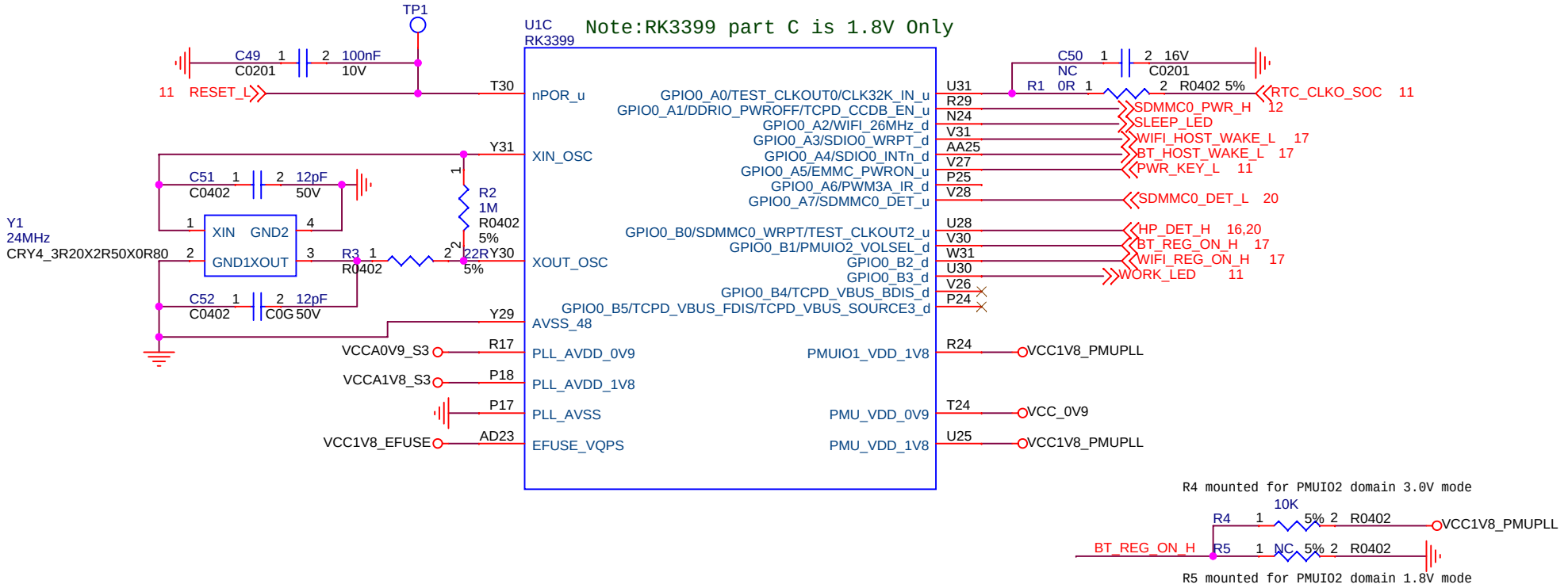

PINE64		
Title: Pinebook Pro		
Size: A4	Document Number: PMU controler	Rev: V2.1
Date:	Sheet 2 of 23	

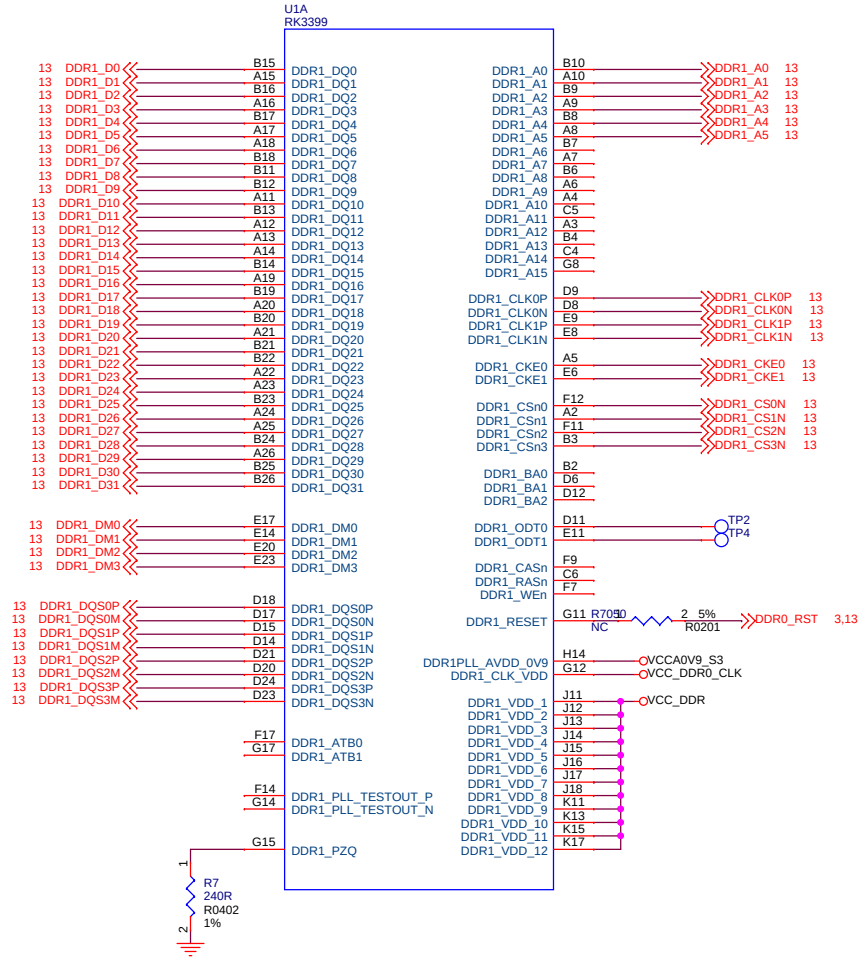

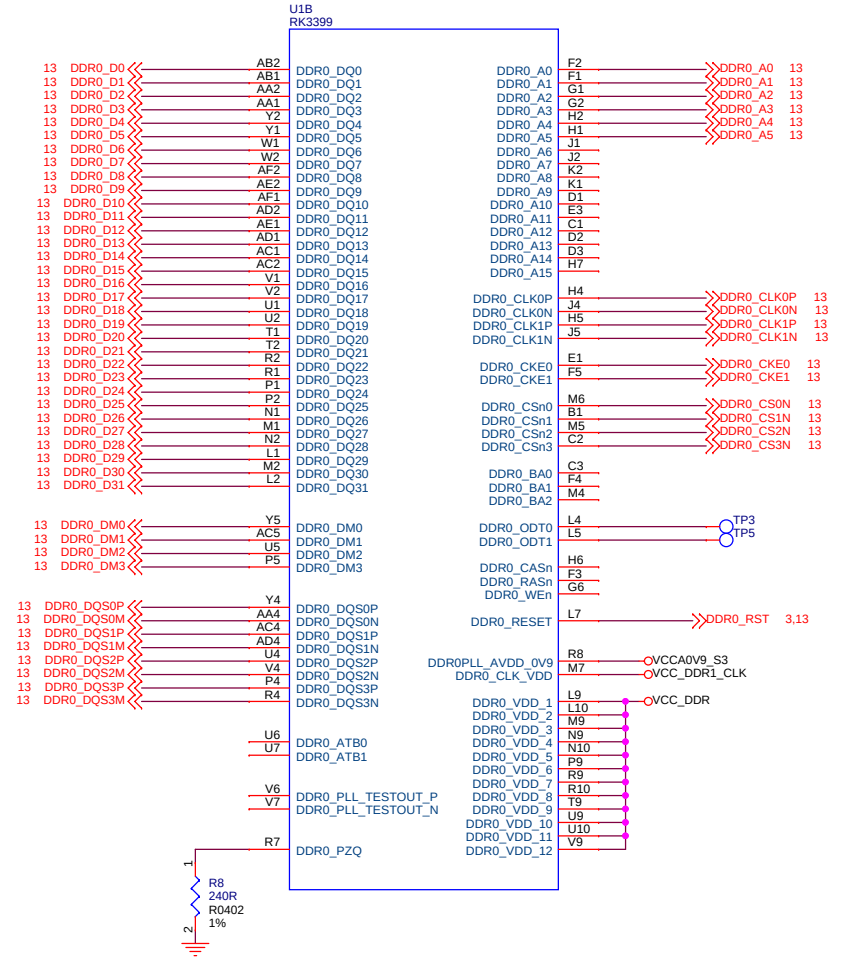

DDR FILTER

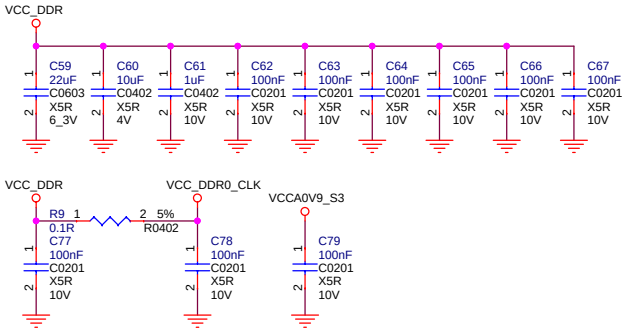

DDR FILTER

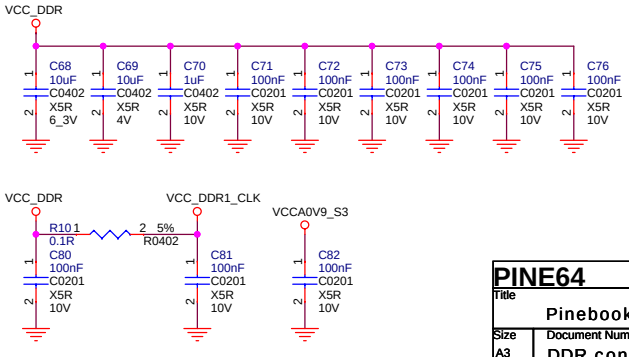

PINE64

Title: Pinebook Pro

Size	Document Number	Rev
A3	DDR controler	V2.1

Date: Sheet 3 of 23

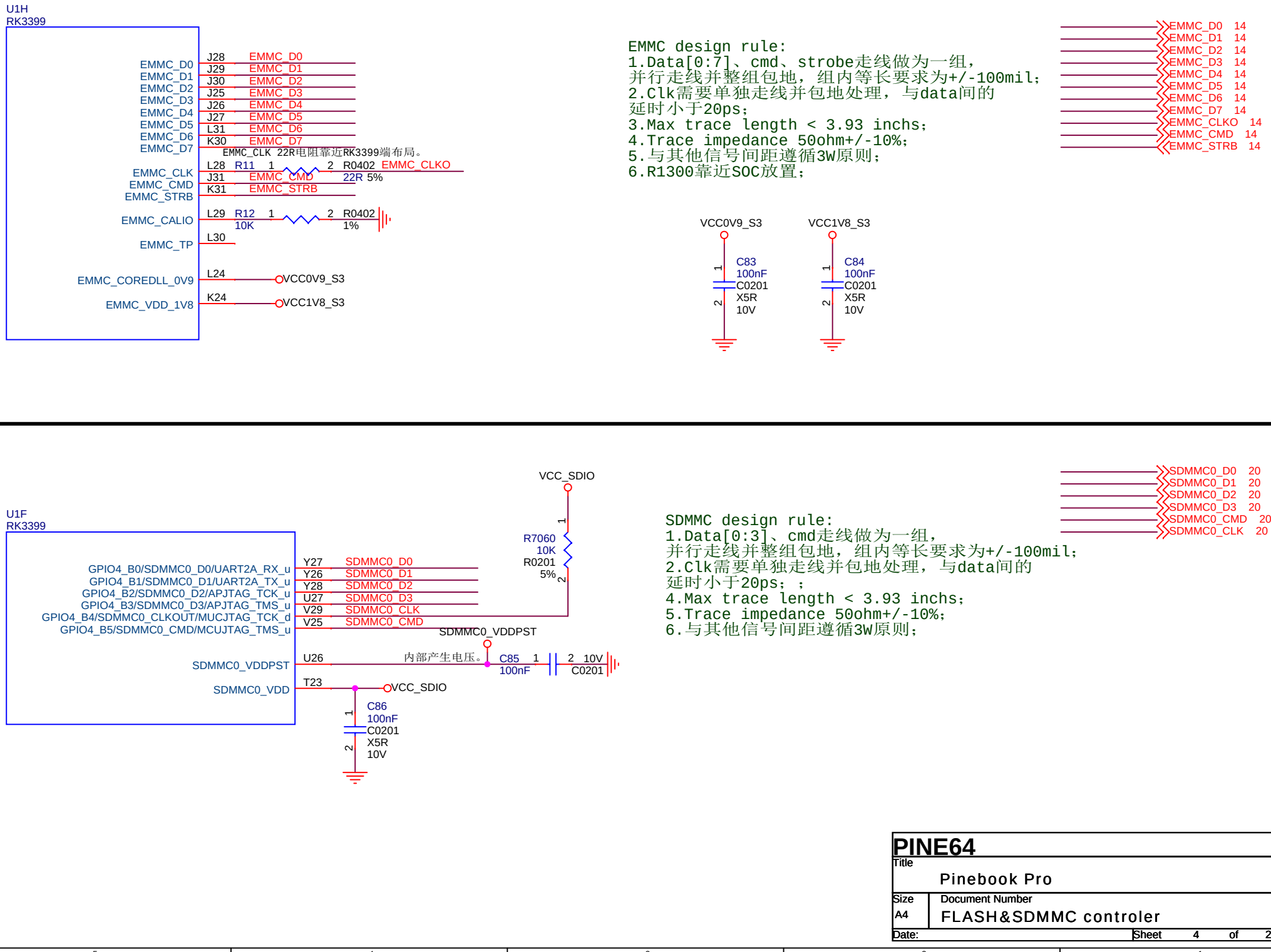
U1H
RK3399
EMMC_D0
EMMC_D1
EMMC_D2
EMMC_D3
EMMC_D4
EMMC_D5
EMMC_D6
EMMC_D7
EMMC_CLK
EMMC_CMD
EMMC_STRB
EMMC_CALIO
EMMC_TP
EMMC_CORELDLL_0V9
EMMC_VDD_1V8
J28 EMMC_D0
J29 EMMC_D1
J30 EMMC_D2
J25 EMMC_D3
J26 EMMC_D4
J27 EMMC_D5
L31 EMMC_D6
K30 EMMC_D7
EMMC_CLK 22R电阻靠近RK3399端布局。
L28 R11 1 2 R0402 EMMC_CLKO
J31 EMMC_CMD 22R 5%
K31 EMMC_STRB
L29 R12 1 2 R0402
10K 1%
L30
L24 VCC0V9_S3
K24 VCC1V8_S3
EMMC design rule:
1.Data[0:7]、cmd、strobe走线做为一组，
并行走线并整组包地，组内等长要求为+/-100mil；
2.Clk需要单独走线并包地处理，与data间的
延时小于20ps；
3.Max trace length < 3.93 inchs；
4.Trace impedance 50ohm+/-10%；
5.与其他信号间距遵循3W原则；
6.R1300靠近SOC放置；
EMMC_D0 14
EMMC_D1 14
EMMC_D2 14
EMMC_D3 14
EMMC_D4 14
EMMC_D5 14
EMMC_D6 14
EMMC_D7 14
EMMC_CLKO 14
EMMC_CMD 14
EMMC_STRB 14
VCC0V9_S3
C83
100nF
C0201
X5R
10V
VCC1V8_S3
C84
100nF
C0201
X5R
10V
U1F
RK3399
GPIO4_B0/SDMMC0_D0/UART2A_RX_u
GPIO4_B1/SDMMC0_D1/UART2A_TX_u
GPIO4_B2/SDMMC0_D2/APJTAG_TCK_u
GPIO4_B3/SDMMC0_D3/APJTAG_TMS_u
GPIO4_B4/SDMMC0_CLKOUT/MUCJTAG_TCK_d
GPIO4_B5/SDMMC0_CMD/MCUJTAG_TMS_u
SDMMC0_VDDPST
SDMMC0_VDD
Y27 SDMMC0_D0
Y26 SDMMC0_D1
Y28 SDMMC0_D2
U27 SDMMC0_D3
V29 SDMMC0_CLK
V25 SDMMC0_CMD
VCC_SDIO
R7060
10K
R0201
5%
SDMMC0_VDDPST
U26
内部产生电压。
C85 1 2 10V
100nF C0201
T23
VCC_SDIO
C86
100nF
C0201
X5R
10V
SDMMC design rule:
1.Data[0:3]、cmd走线做为一组，
并行走线并整组包地，组内等长要求为+/-100mil；
2.Clk需要单独走线并包地处理，与data间的
延时小于20ps；；
4.Max trace length < 3.93 inchs；
5.Trace impedance 50ohm+/-10%；
6.与其他信号间距遵循3W原则；
SDMMC0_D0 20
SDMMC0_D1 20
SDMMC0_D2 20
SDMMC0_D3 20
SDMMC0_CMD 20
SDMMC0_CLK 20
PINE64
Title
Pinebook Pro
Size
A4
Document Number
FLASH&SDMMC controler
Rev
V2.1
Date:
Sheet 4 of 23

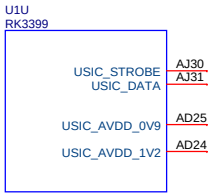

USB2.0

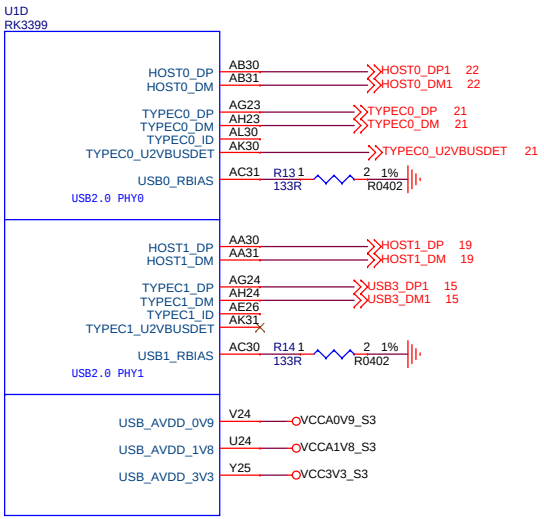

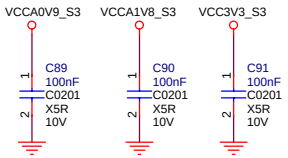

USB2.0 design rule:
1.Max intra-pair skew < 4 ps;
2.Max trace length < 6 inchs;
3.Max allowed via < 6;
4.Trace impedance 90ohm+/-10%;
5.与其他信号间距遵循3W原则;

USB3.0

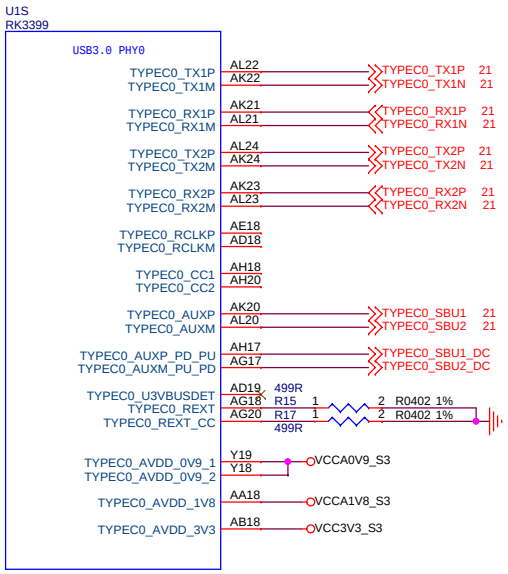

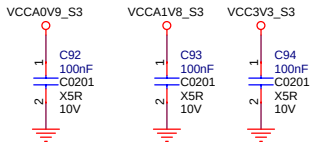

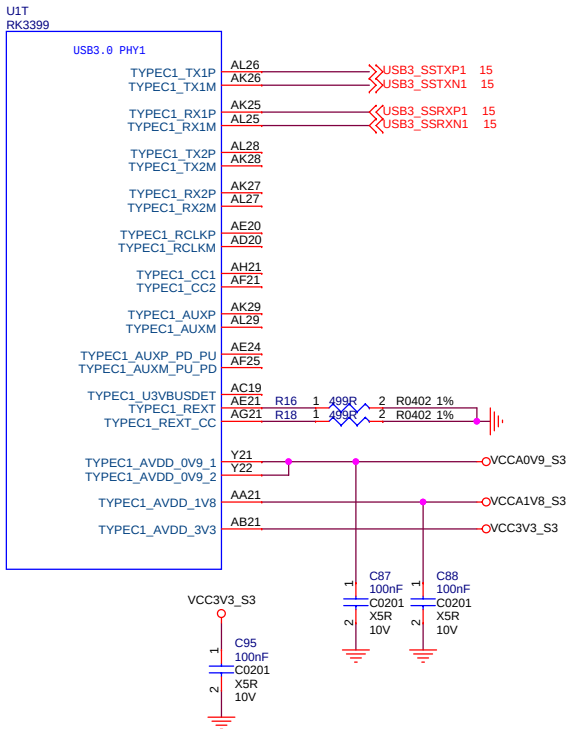

USB3.0 design rule:
1.Max intra-pair skew < 4 ps;
2.Max length skew between TX and RX < 1.6 ns;
3.Max trace length < 6 inchs;
4.Max allowed via < 4;
5.Trace impedance 90ohm+/-10%;
6.与其他信号间距遵循3W原则;

DP design rule:
1.Max intra-pair skew < 4 ps;
2.Max trace length < 6 inchs;
3.Max allowed via < 4;
4.Trace impedance 90ohm+/-10%;
5.与其他信号间距遵循3W原则;

PINE64		
Title: Pinebook Pro		
Size: A3	Document Number: USB CONTROLER	Rev: V2.1
Date:	Sheet 5 of 23	

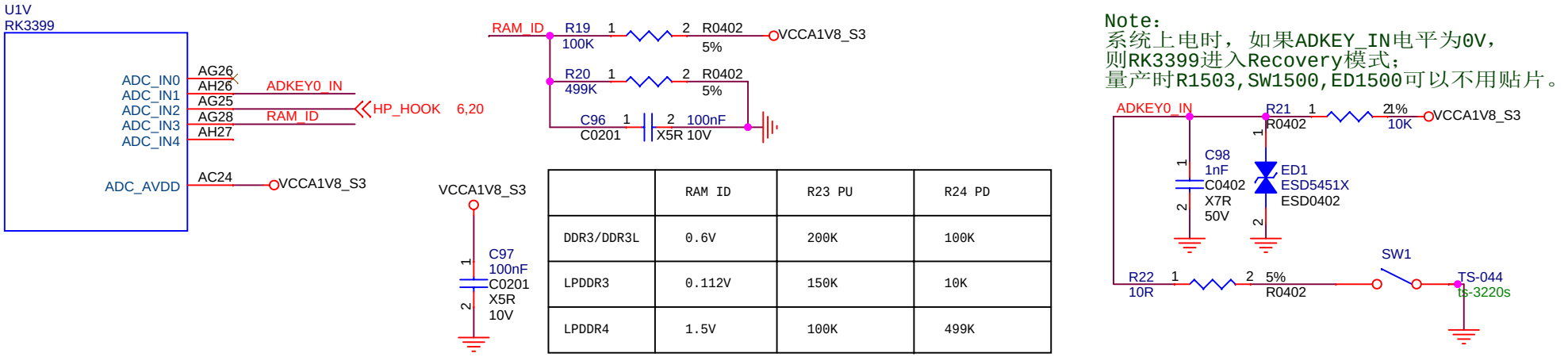

	RAM ID	R23 PU	R24 PD
DDR3/DDR3L	0.6V	200K	100K
LPDDR3	0.112V	150K	10K
LPDDR4	1.5V	100K	499K

Note:
系统上电时，如果ADKEY_IN电平为0V，
则RK3399进入Recovery模式；
量产时R1503,SW1500,ED1500可以不用贴片。

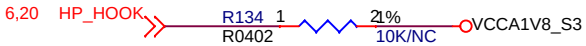

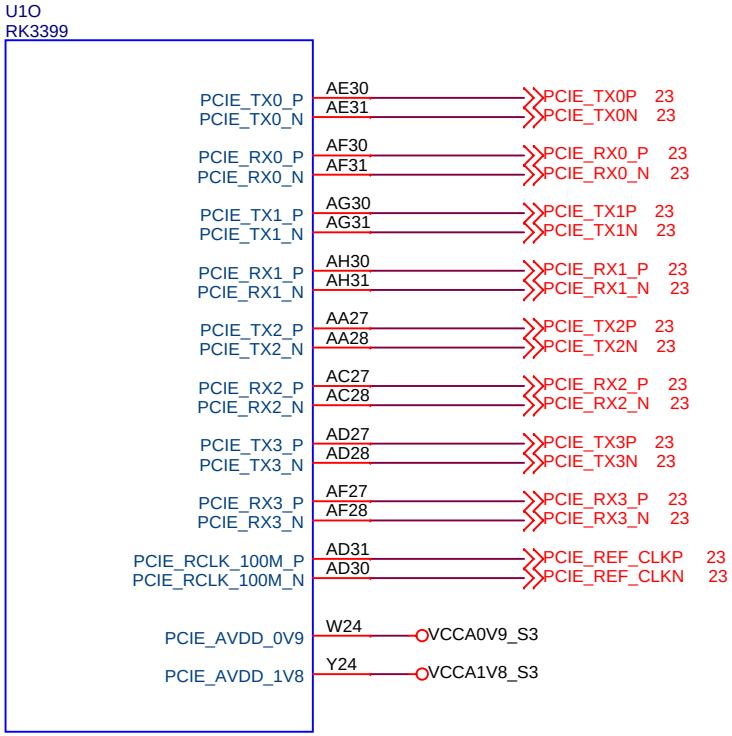

PINE64		
Title: Pinebook Pro		
Size: A4	Document Number: SARADC/KEY	Rev: V2.1
Date:	Sheet 6 of 23	

U1L
RK3399

GPIO2_A0/VOP_D0/CIF_D0/I2C2_SDA_u	G31
GPIO2_A1/VOP_D1/CIF_D1/I2C2_SCL_u	H25
GPIO2_A2/VOP_D2/CIF_D2_d	H30
GPIO2_A3/VOP_D3/CIF_D3_d	F28
GPIO2_A4/VOP_D4/CIF_D4_d	H29
GPIO2_A5/VOP_D5/CIF_D5_d	F29
GPIO2_A6/VOP_D6/CIF_D6_d	H27
GPIO2_A7/VOP_D7/CIF_D7/I2C7_SDA_u	G30
GPIO2_B0/VOP_CLK/CIF_VSYNC/I2C7_SCL_u	H28
GPIO2_B1/SPI2_RXD/CIF_HREF/I2C6_SDA_u	F30
GPIO2_B2/SPI2_TXD/CIF_CLKIN/I2C6_SCL_u	H24
GPIO2_B3/SPI2_CLK/VOP_DEN/CIF_CLKOUTA_u	H31
GPIO2_B4/SPI2_CSn0_u	F31
APIO2_VDDPST	J24
APIO2_VDD	K23

U1R
RK3399

MIPI_RX0_D0P	AK15
MIPI_RX0_D0N	AL15
MIPI_RX0_D1P	AK14
MIPI_RX0_D1N	AL14
MIPI_RX0_CLKP	AK13
MIPI_RX0_CLKN	AL13
MIPI_RX0_D2P	AK12
MIPI_RX0_D2N	AL12
MIPI_RX0_D3P	AK11
MIPI_RX0_D3N	AL11
MIPI_RX0_REXT	AF14
MIPI_RX0_AVDD_1V8	AB14

U1P
RK3399

MIPI_TX1/RX1_D0P	AK6
MIPI_TX1/RX1_D0N	AL6
MIPI_TX1/RX1_D1P	AK7
MIPI_TX1/RX1_D1N	AL7
MIPI_TX1/RX1_CLKP	AK8
MIPI_TX1/RX1_CLKN	AL8
MIPI_TX1/RX1_D2P	AK9
MIPI_TX1/RX1_D2N	AL9
MIPI_TX1/RX1_D3P	AK10
MIPI_TX1/RX1_D3N	AL10
MIPI_TX1/RX1_REXT	AF11
MIPI_TX1/RX1_AVDD_1V8	AC10

PINE64

Title: Pinebook Pro

Size	Document Number	Rev
A4	DVP interface	V2.1

Date: | Sheet 7 of 23

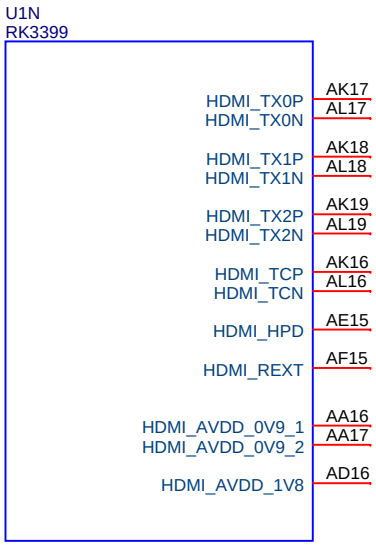

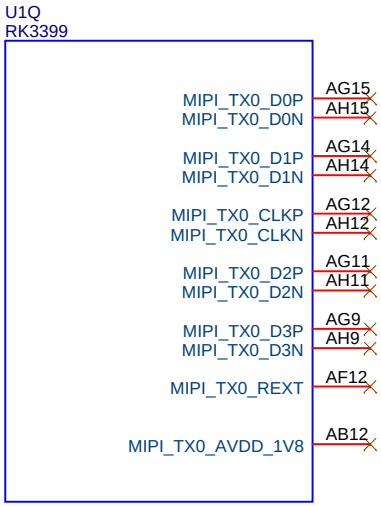

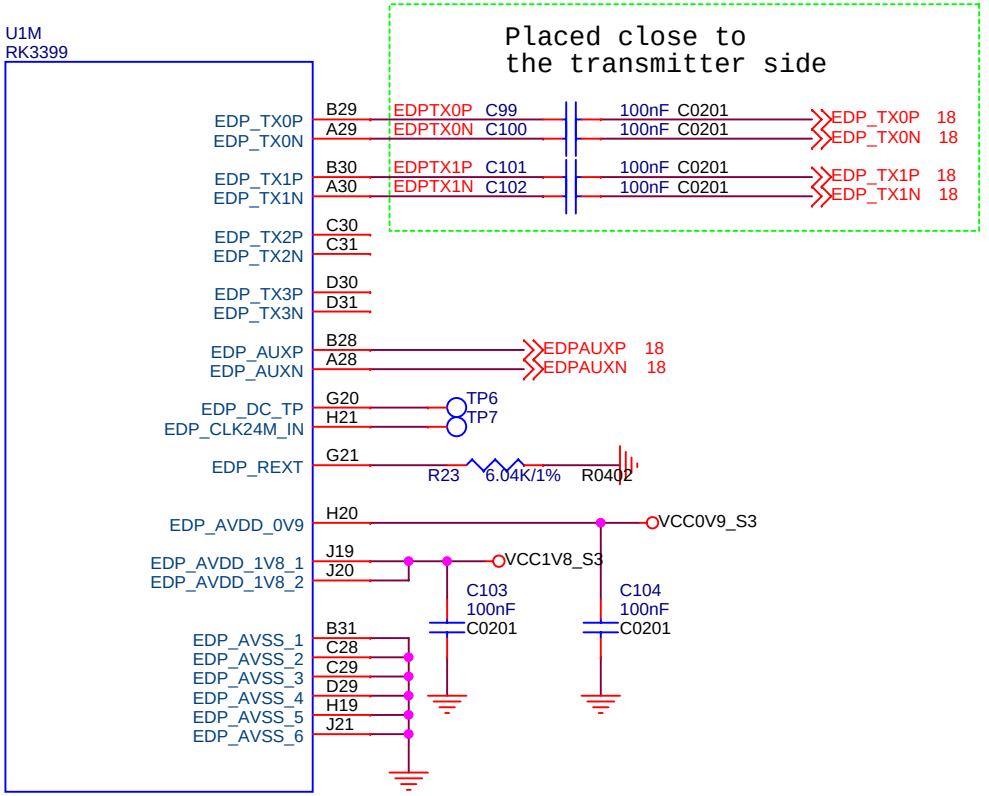


```
eDP design rule:
1.Max intra-pair skew < 4 ps;
2.Max trace length < 6 inchs;
3.Max allowed via < 4;
4.Trace impedance 90ohm+/-10%;
5.与其他信号间距遵循3W原则;
```

PINE64		
Title: Pinebook Pro		
Size: A4	Document Number: Display interface	Rev: V2.1
Date:	Sheet 8 of 23	

U1I RK3399 Note:RK3399 part I is 3.3V only

GPIO3_A0/MAC_TXD2/SPI4_RXD_d F24
GPIO3_A1/MAC_TXD3/SPI4_TXD_d H23
GPIO3_A2/MAC_RXD2/SPI4_CLK_u E30
GPIO3_A3/MAC_RXD3/SPI4_CSn0_u E25
GPIO3_A4/MAC_TXD0/SPI0_RXD_d D26
GPIO3_A5/MAC_TXD1/SPI0_TXD_d G23
GPIO3_A6/MAC_RXD0/SPI0_CLK_u E26
GPIO3_A7/MAC_RXD1/SPI0_CSn0_u F27

GPIO3_B0/MAC_MDC/SPI0_CSn1_u E29
GPIO3_B1/MAC_RXDV_d C27
GPIO3_B2/MAC_RXER/I2C5_SDA_u F23 — PMIC_INT_L 11
GPIO3_B3/MAC_CLK/I2C5_SCL_u G24
GPIO3_B4/MAC_TXEN/UART1_RX_u H22
GPIO3_B5/MAC_MDIO/UART1_TX_u G26
GPIO3_B6/MAC_RXCLK/UART3_RX_u F25
GPIO3_B7/MAC_CRS/CIF_CLKOUTB/UART3_TX_u B27

GPIO3_C0/MAC_COL/UART3_CTSn/SPDIF_TX_u D27
GPIO3_C1/MAC_TXCLK/UART3_RTSn_u E28

APIO1_VDDPST J22 — VCC_1V8
APIO1_VDD J23 — VCC3V3_SYS

VCC3V3_S3: C1801 100nF C0201
VCC_1V8: C1802 100nF C0201

U1G RK3399 Note:RK3399 part G is 1.8V only

GPIO2_C0/UART0_RX_u AE9 — UART0_RXD 17
GPIO2_C1/UART0_TX_u AH8 — UART0_TXD 17
GPIO2_C2/UART0_CTSn_u AG8 — UART0_CTS 17
GPIO2_C3/UART0_RTSn_u AL5 — UART0_RTS 17
GPIO2_C4/SDIO0_D0/SPI5_RXD_u AD8 — SDIO0_D0 17
GPIO2_C5/SDIO0_D1/SPI5_TXD_u AK5 — SDIO0_D1 17
GPIO2_C6/SDIO0_D2/SPI5_CLK_u AG7 — SDIO0_D2 17
GPIO2_C7/SDIO0_D3/SPI5_CSn0_u AE8 — SDIO0_D3 17

GPIO2_D0/SDIO0_CMD_u AH6 — SDIO0_CMD 17
GPIO2_D1/SDIO0_CLKOUT/TEST_CLKOUT1_u AF7 — SDIO0_CLK 17
GPIO2_D2/SDIO0_DETN/PCIE_CLKREQn_u AL4 — R8207 0R — PCIE_CLKREQ_L 9
GPIO2_D3/SDIO0_PWREN_d AD9 — R8208 0R — BT_WAKE_L 17
GPIO2_D4/SDIO0_BKPWR_d AF8 — PCIE_PERST_L

APIO3_VDD_1V8 AB8 — VCC_1V8

VCC_1V8: C107 100nF C0201 X5R 10V

U1J RK3399 Note:RK3399 part J is 1.8V/3.0V mode

GPIO3_D0/I2S0_SCLK_d AG3
GPIO3_D1/I2S0_LRCK_RX_d AF4
GPIO3_D2/I2S0_LRCK_TX_d A32
GPIO3_D3/I2S0_SDI0_d Y7
GPIO3_D4/I2S0_SDI1SDO3_d AE5
GPIO3_D5/I2S0_SDI2SDO2_d AA6
GPIO3_D6/I2S0_SDI3SDO1_d AH2
GPIO3_D7/I2S0_SDO0_d AH1

GPIO4_A0/I2S_CLK_d AC7 — I2S_CLK 16
GPIO4_A1/I2C1_SDA_u AG1 — I2C1_SDA 16
GPIO4_A2/I2C1_SCL_u Y6 — I2C1_SCL 16
GPIO4_A3/I2S1_SCLK_d AF3 — I2S1_SCLK 16
GPIO4_A4/I2S1_LRCK_RX_d AA7 — I2S1_LRCK_RX 16
GPIO4_A5/I2S1_LRCK_TX_d AJ1 — I2S1_LRCK_TX 16
GPIO4_A6/I2S1_SDI0_d AD6 — I2S1_SDI0 16
GPIO4_A7/I2S1_SDO0_d AC6 — I2S1_SDO0 16

APIO5_VDDPST AA8 — VCC_1V5
APIO5_VDD Y8 — VCC_3V0

VCC_3V0: R8204 1.5K R0402, R8206 1.5K R0402 — I2C1_SDA 16, I2C1_SCL 16

VCC_3V0: C455 100nF C0201 X5R 10V
VCC_1V5: C286 100nF C0201 X5R 10V

U1E RK3399 Note:RK3399 part E is 1.8V/3.0V mode

GPIO1_A0/ISP0_SHUTTER_EN/ISP1_SHUTTER_EN/TCPD_VBUS_SINK_EN_d R25 — LCD_EN 18
GPIO1_A1/ISP0_SHUTTER_TRIG/ISP1_SHUTTER_TRIG/TCPD_CC0_VCONN_EN_d T31 — HALL_SEN 20
GPIO1_A2/ISP0_FLASHTRIGIN/ISP1_FLASHTRIGIN/TCPD_CC1_VCONN_EN_d R26 — TYPEC0_CC_INT_L 21
GPIO1_A3/ISP0_FLASHTRIGOUT/ISP1_FLASHTRIGOUT_d R27 — VCC5V0_TYPEC0_EN 21
GPIO1_A4/ISP0_PRELIGHT_TRIG/ISP1_PRELIGHT_TRIG_d R28
GPIO1_A5/AP_PWROFF_d R30 — PMIC_SLEEP_H 11,12
GPIO1_A6/TSADC_INT_z P26 — OTP_OUT_H 11
GPIO1_A7/SPI1_RXD/UART4_RX_u P27 — SPI_RXD_M2

GPIO1_B0/SPI1_TXD/UART4_TX_u R31 — SPI_TXD_M2
GPIO1_B1/SPI1_CLK/PMCU_JTAG_TCK_u P28 — SPI_CLK_M2
GPIO1_B2/SPI1_CSn0/PMCU_JTAG_TMS_u P29 — SPI_CSN0_M2

GPIO1_B3/I2C4_SDA_u P31 — I2C4_SDA 11
GPIO1_B4/I2C4_SCL_u P30 — I2C4_SCL 11
GPIO1_B5_d M24 — PWR_5V 10
GPIO1_B6/PWM3B_IR_d M25 — CPU_SLEEP_H 11
GPIO1_B7/SPI3_RXD/I2C0_SDA_u M26 — I2C0_SDA_PMIC 11

GPIO1_C0/SPI3_TXD/I2C0_SCL_u N30 — I2C0_SCL_PMIC 11
GPIO1_C1/SPI3_CLK_d M27 — CPU_B_SLEEP_H 11
GPIO1_C2/SPI3_CSn0_u N31 — HPOUT_EN 11
GPIO1_C3/PWM2_d M28 — LOG_DVS_PWM 11
GPIO1_C4/I2C8_SDA_u M29
GPIO1_C5/I2C8_SCL_u M30
GPIO1_C6/TCPD_VBUS_SOURCE0_d L25 — LCDVCC_EN10
GPIO1_C7/TCPD_VBUS_SOURCE1_d M31

GPIO1_D0/TCPD_VBUS_SOURCE2_d L26

DFTJTAG_TMS_u AA24
DFTJTAG_TRSTn_d AB24

PMUIO2_VDDPST N23 — VCC_1V5
PMUIO2_VDD P23 — VCC_3V0

R24 10K

1.8V Only	VDDPST=VDDIO=1.8V
3.3V Only	VDDPST=1.8V,VDDIO=3.3V
other	3.0V mode:VDDPST=1.5V,VDDIO=3.0V 1.8V mode:VDDPST=1.8V,VDDIO=1.8V

VCC_1V5: C105 100nF C0201 X5R 10V
VCC_3V0: C106 100nF C0201 X5R 10V

I2C4_SDA — R29 1 0R 5% 2 R0402 — I2C4_SDA_TYPEC 21
I2C4_SCL — R30 1 0R 5% 2 R0402 — I2C4_SCL_TYPEC 21
I2C0_SDA_PMIC R25 2.2K1 2 R0402 5% — VCC_3V0
I2C0_SCL_PMIC R26 2.2K1 2 R0402 5%
I2C4_SDA R27 2.2K1 2 R0402 5% — VCC_3V0
I2C4_SCL R28 2.2K1 2 R0402 5%

SPI FLASH 128M

VCC_3V0
R141 10K, R140 10K, R137 10K
C295 100nF, R139 10K, R138 10K, R136 10K
U18 GD25Q127CSIG
/CS VCC 8
DO /HOLD 7
/WP CLK 6
GND DIO 5
SPI_CSN0_M2 1
SPI_RXD_M2 2
3
4
SPI_CLK_M2
SPI_TXD_M2

U1K RK3399 Note:RK3399 part J is 1.8V/3.0V mode

GPIO4_C0/I2C3_SDA/UART2B_RX_u AG6
GPIO4_C1/I2C3_SCL/UART2B_TX_u AL2
GPIO4_C2/PWM0/VOP0_PWM/VOP1_PWM_d AF5
GPIO4_C3/UART2C_RX_u AK2 — R311 100R 2 5% — LCD_BL_PWM 18
GPIO4_C4/UART2C_TX_u A34 — R321 100R 2 5% — DEBUG_RX 18
GPIO4_C5/SPDIF_TX_d AK1 — DEBUG_TX 18
GPIO4_C6/PWM1_d AL3 — CHG_INT 11
GPIO4_C7/HDMI_CECINOUT/EDP_HOTPLUG_u AD7

GPIO4_D0/PCIE_CLKREQnB_u AE6 — DC_DET 10
GPIO4_D1/DP_HOTPLUG_d AK4 — RK3399_SSD_SLEEP_L_330 23
GPIO4_D2_d AH3 — VCC5V0_HOST_EN 15
GPIO4_D3_d AK3 — SPK_CTL_H 16
GPIO4_D4_d AH5 — RK3399_SSD_DET_L_330 23
GPIO4_D5_d AJ3
GPIO4_D6_d AG4

APIO4_VDDPST AC8 — VCC_1V5
APIO4_VDD AC9 — VCC_3V0

For debug(Default)
DEBUG_RX
DEBUG_TX
J1 1 2 3 NC

VCC_3V0: C109 100nF C0201 X5R 10V
VCC_1V5: C110 100nF C0201 X5R 10V

PINE64
Title: Pinebook Pro
Size: Custom | Document Number: GPIO | Rev: V2.1
Date: | Sheet 9 of 23

CHARGE and Power Path

DC IN 5V 3A

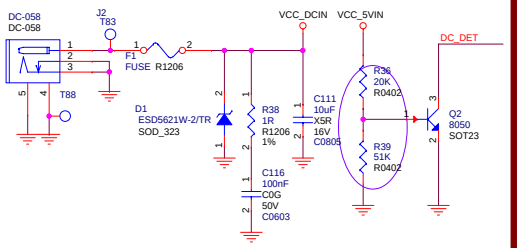

BATTAR 单节3.8V 9000mA

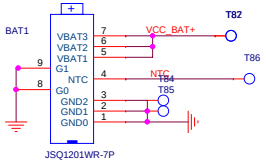

N-MOS

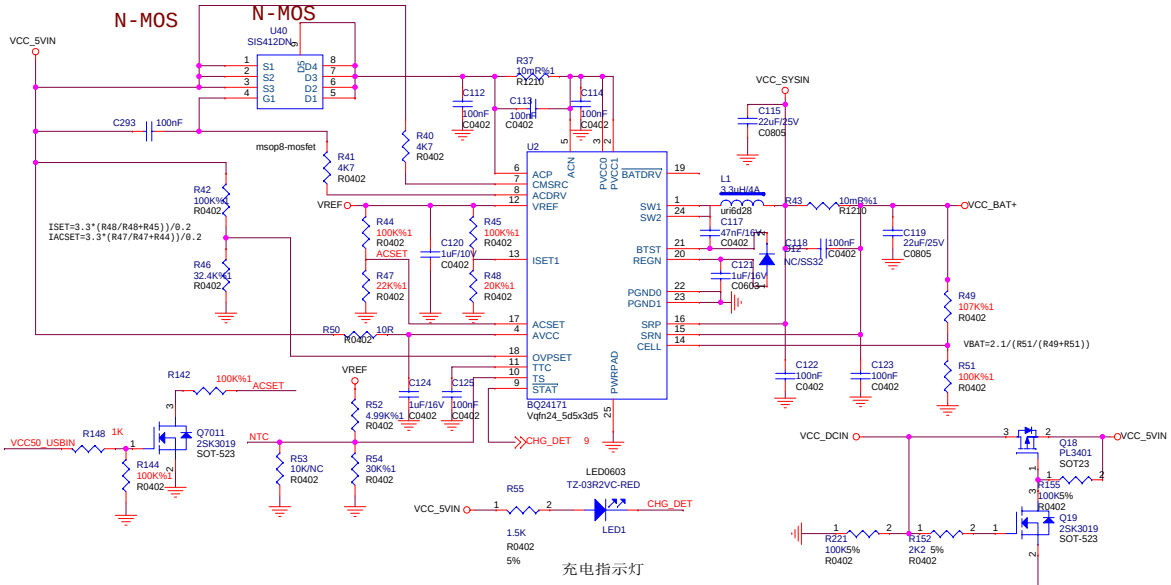

3.3V SYSTEM

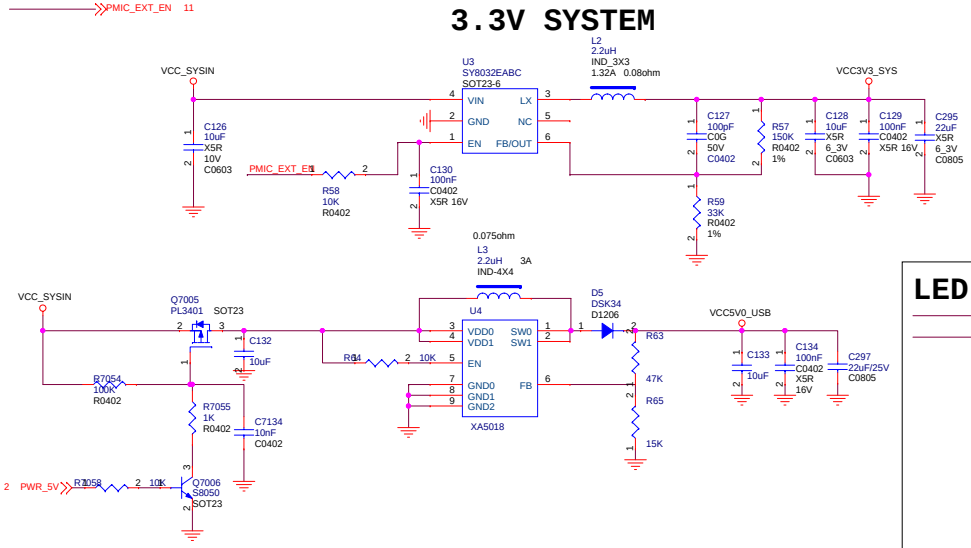

Power Path Managment

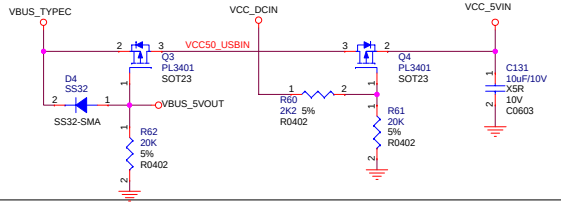

LED

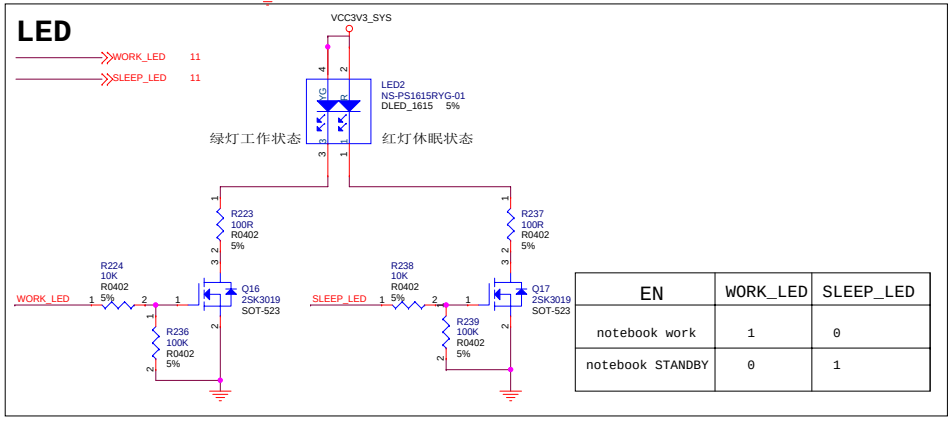

EN	WORK_LED	SLEEP_LED
notebook work	1	0
notebook STANDBY	0	1

PINE64

Title: Pinebook Pro

Size: Custom | Document Number: Charge | Rev: V2.1

Date: | Sheet 10 of 23

PMIC

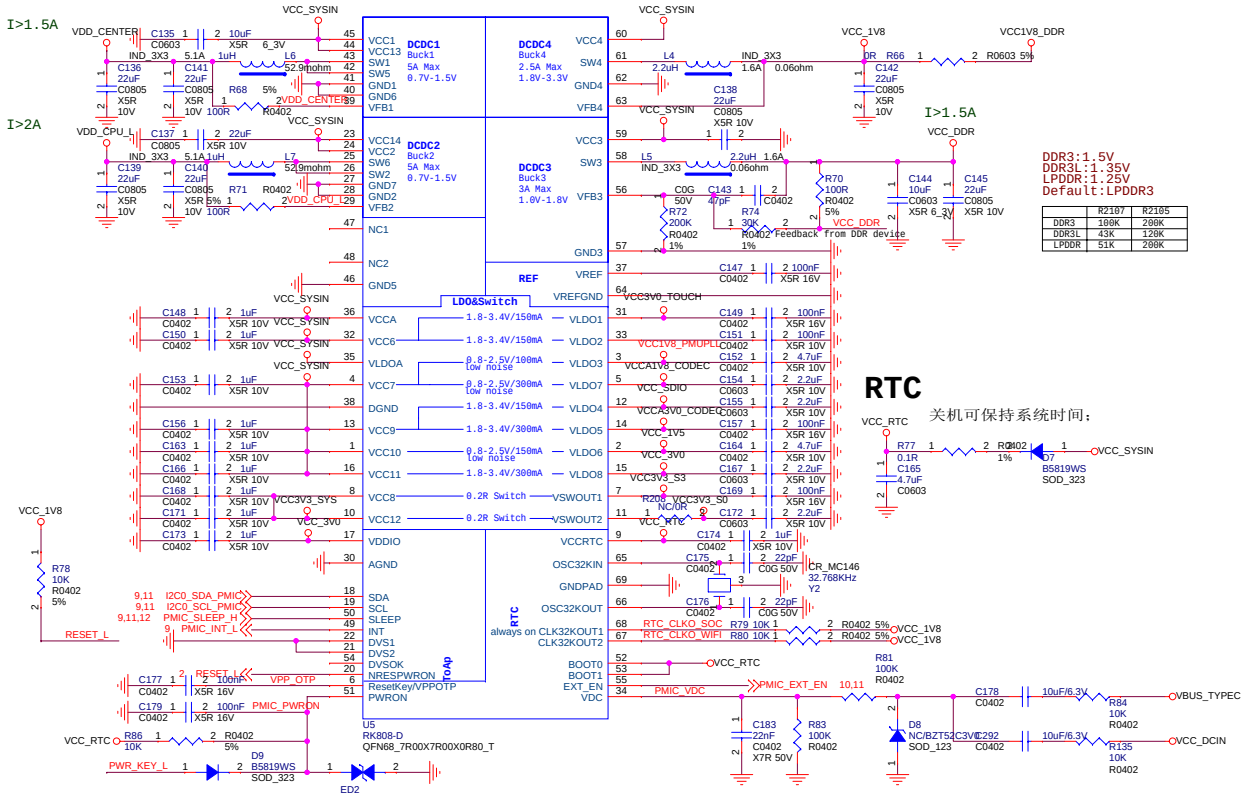

RTC

关机可保持系统时间；

Over-temperature Protection

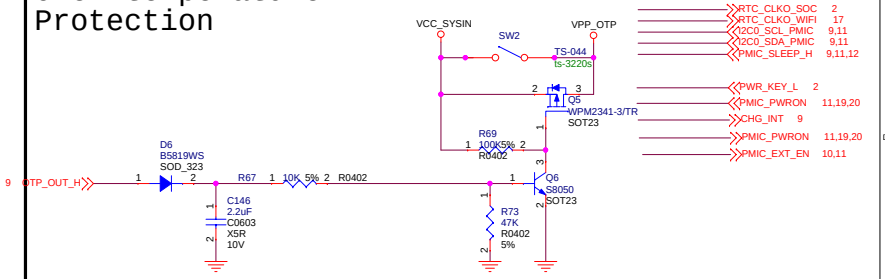

VDD_CPU_B power

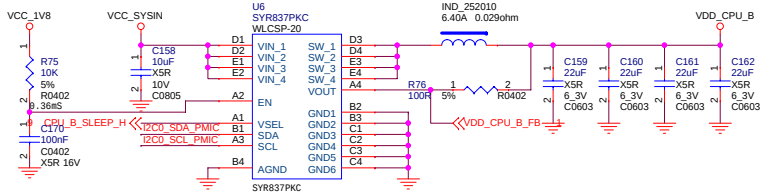

VDD_GPU power

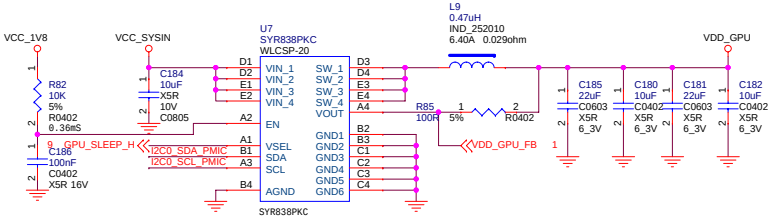

VDD_LOG power

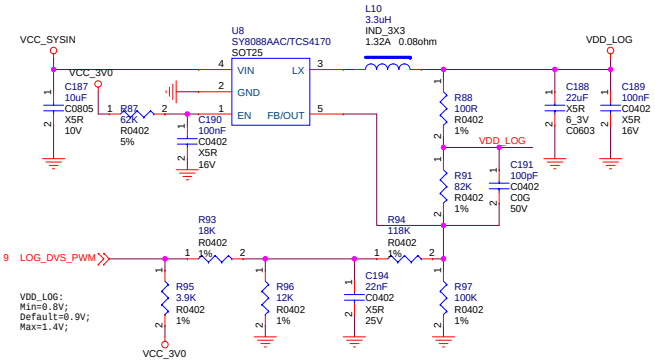

Gas Gauge

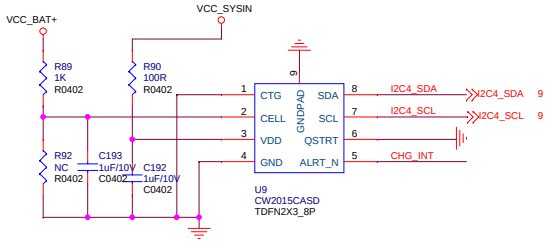

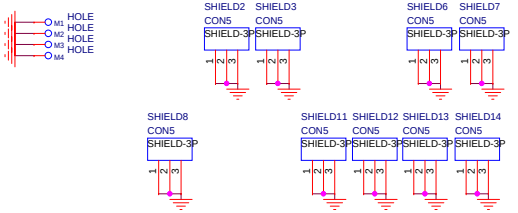

PINE64		
Title	Pinebook Pro	
Size: Custom	Document Number: RK808-D 1	Rev: V2.1
Date:	Sheet 11 of 23	

VCC_0V9 power

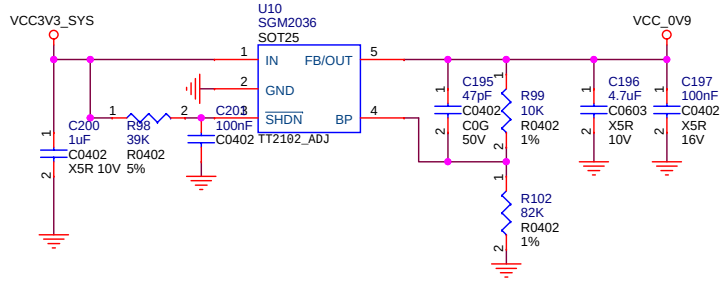

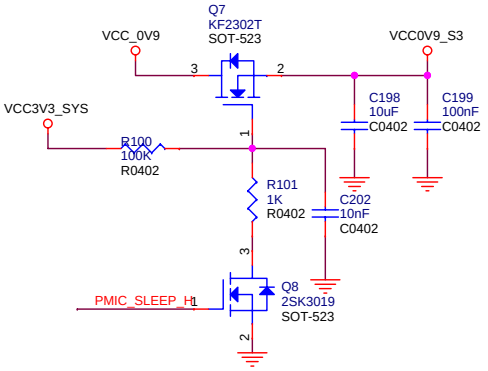

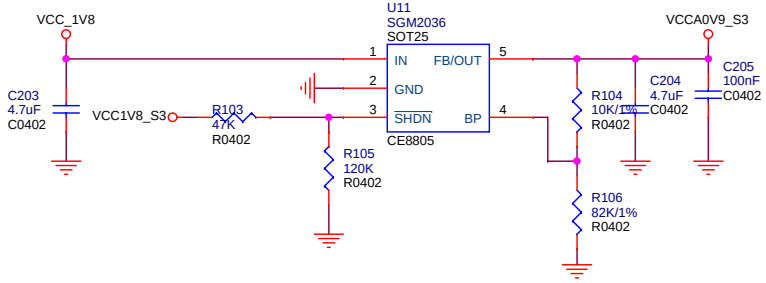

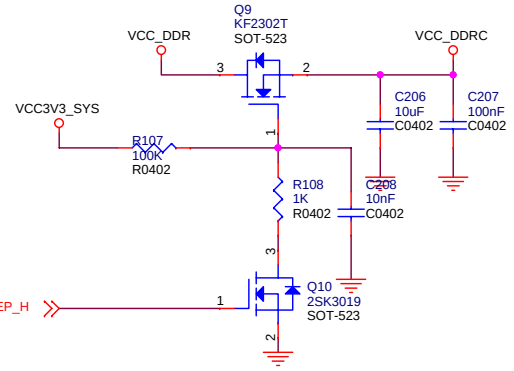

VCCA1V8_S3 power

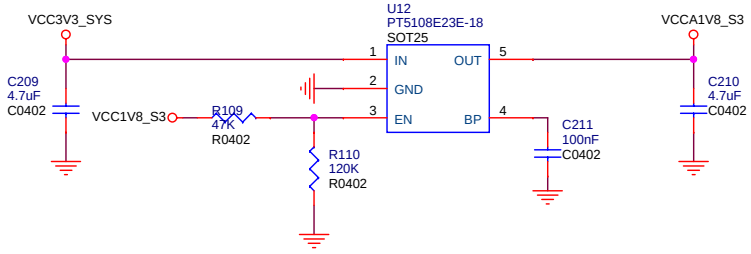

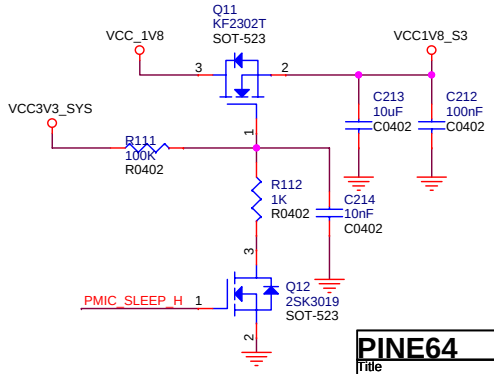

VCC3V0_SD power

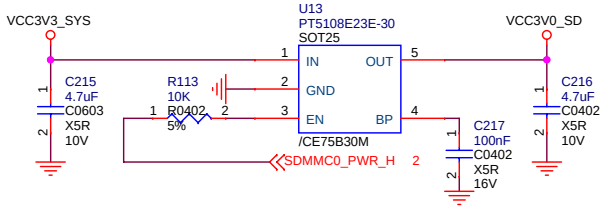

PINE64

Title: Pinebook Pro		
Size: B	Document Number: RK808-D 2	Rev: V2.1
Date:	Sheet 12 of 23	

LPDDR4

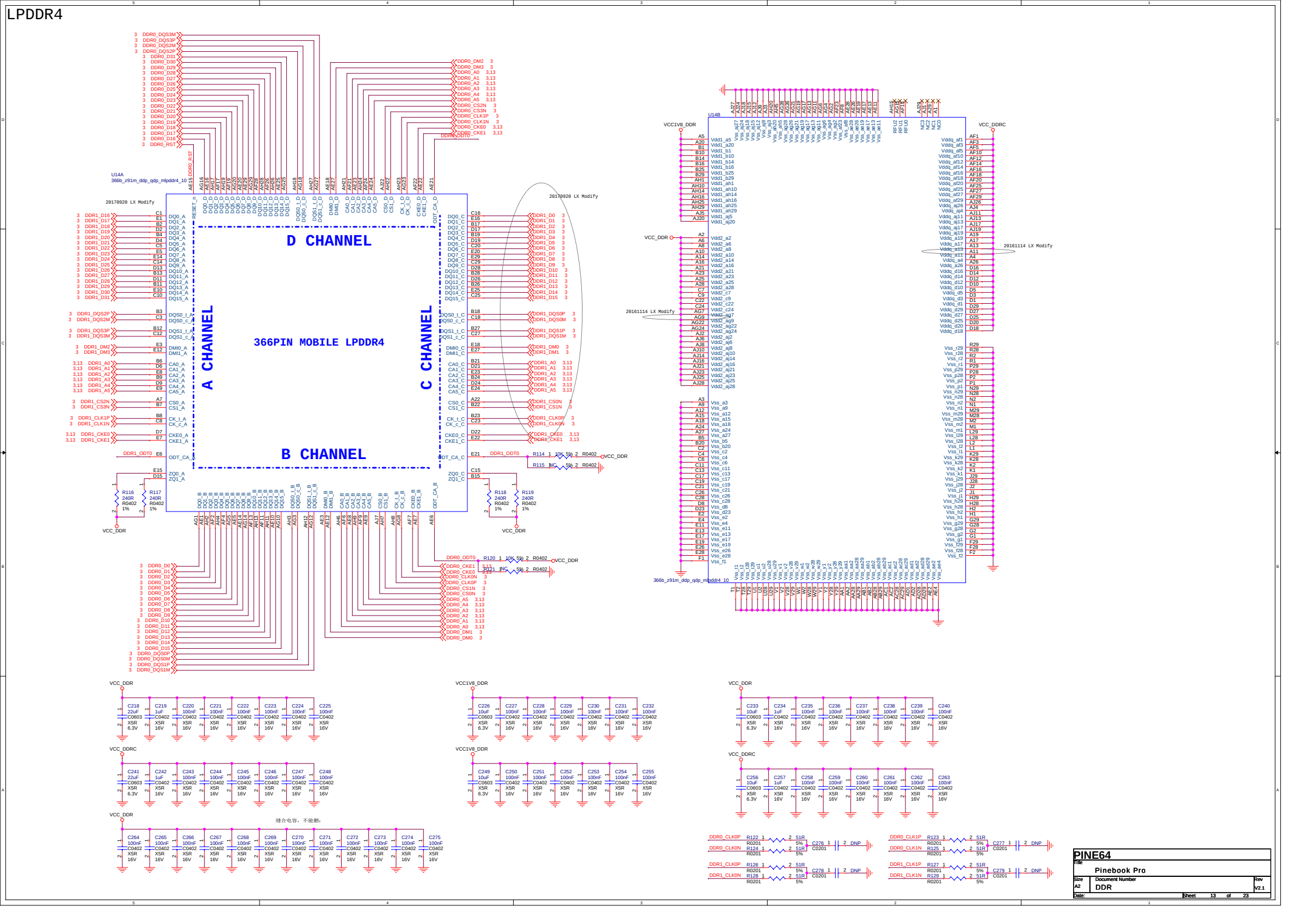

U14A
366b_z91m_ddp_qdp_mlpddr4_10
20170920 LX Modify
D CHANNEL
A CHANNEL
C CHANNEL
B CHANNEL
366PIN MOBILE LPDDR4
U14B
VCC1V8_DDR
VCC_DDR
VCC_DDRC
20161114 LX Modify
VCC_DDR
VCC1V8_DDR
VCC_DDRC
VCC_DDR
VCC_DDRC
VCC_DDR
VCC1V8_DDR
VCC_DDR
VCC_DDRC
VCC_DDR
缝合电容，不能删：
DDR0_CLK0P
DDR0_CLK0N
DDR1_CLK0P
DDR1_CLK0N
DDR0_CLK1P
DDR0_CLK1N
DDR1_CLK1P
DDR1_CLK1N
DNP
PINE64
Title
Pinebook Pro
Size
A2
Document Number
DDR
Rev
V2.1
Date:
Sheet 13 of 23

eMMC Port

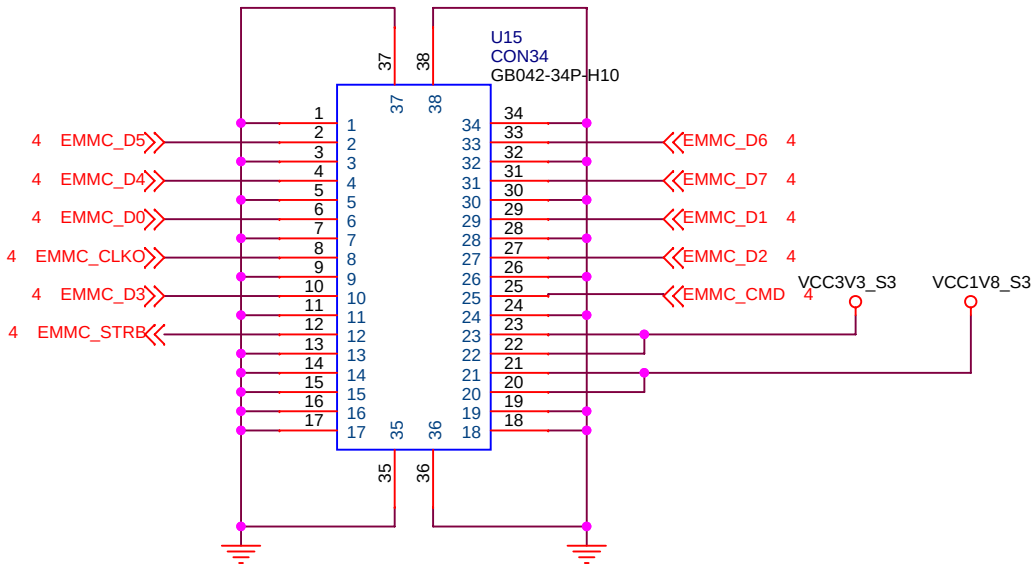

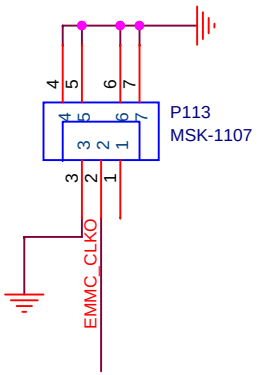

Note:
Reserve SW for Update.

	SEL	Shunt Status	Function
	X	ON	eMMC
	0	OFF	MASKROM

Note:
Reserve PAD for Update.

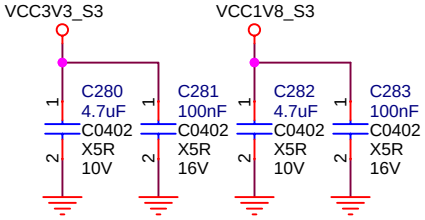

PINE64		
Title: Pinebook Pro		
Size: A4	Document Number: EMMC	Rev: V2.1
Date:	Sheet 14 of 23	

USB3.0 OTG port

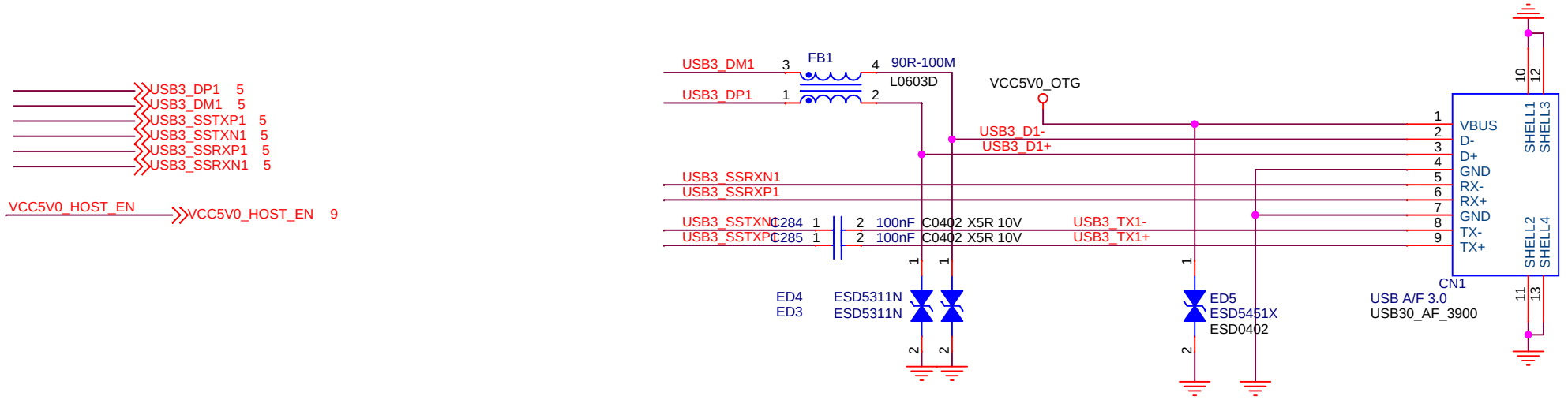

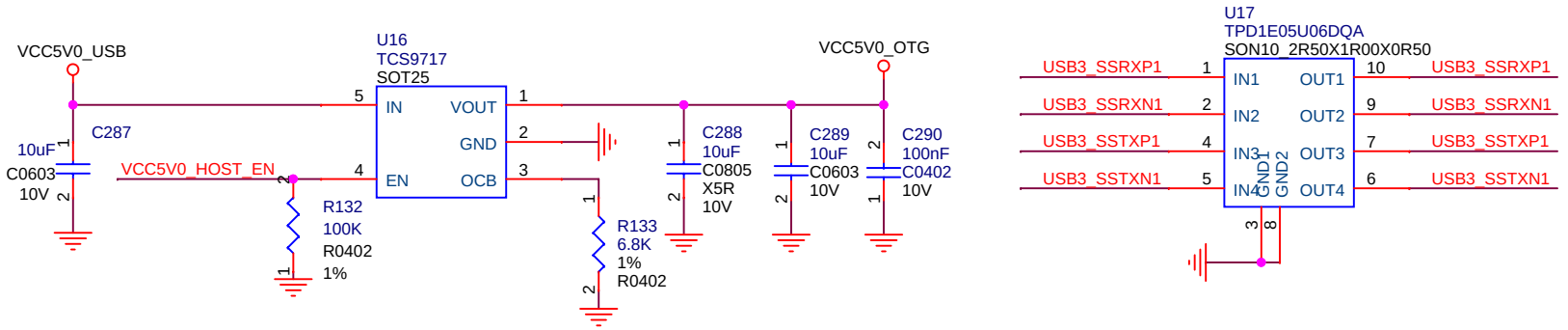

PINE64		
Title: Pinebook Pro		
Size: A4	Document Number: USB 3.0	Rev: V2.1
Date:	Sheet 15 of 23	

CODEC

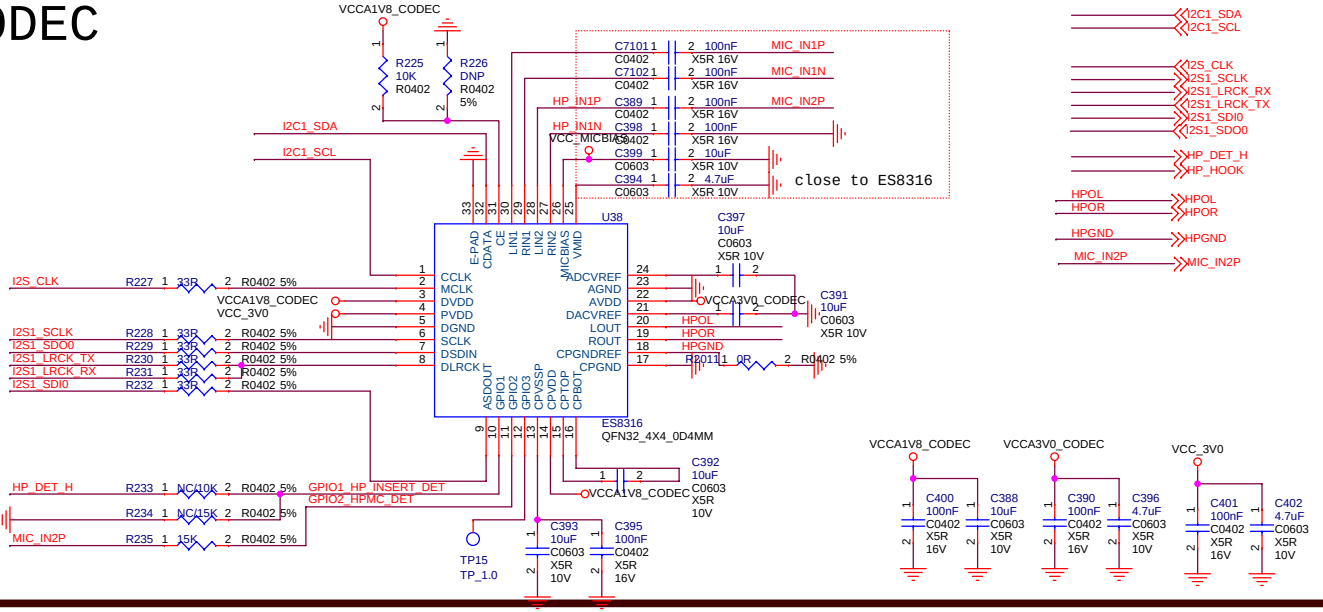

SPEAKER

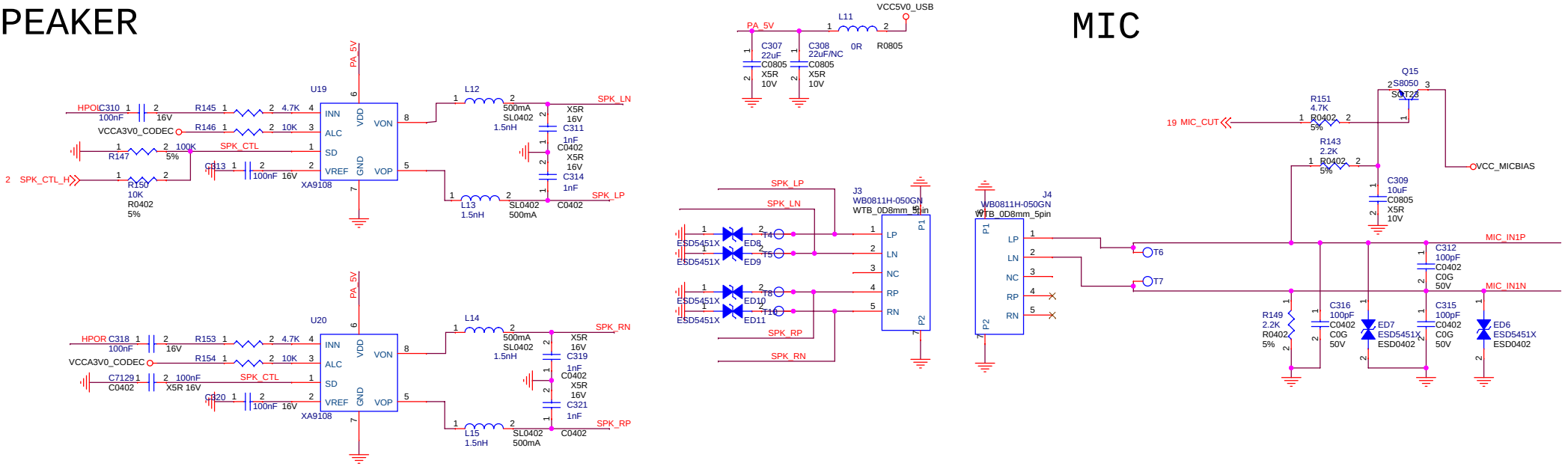

MIC

PINE64		
Title: Pinebook Pro		
Size: Custom	Document Number: ES8316	Rev: V2.1
Date:	Sheet 16 of 23	

WIFI/BT MODULE

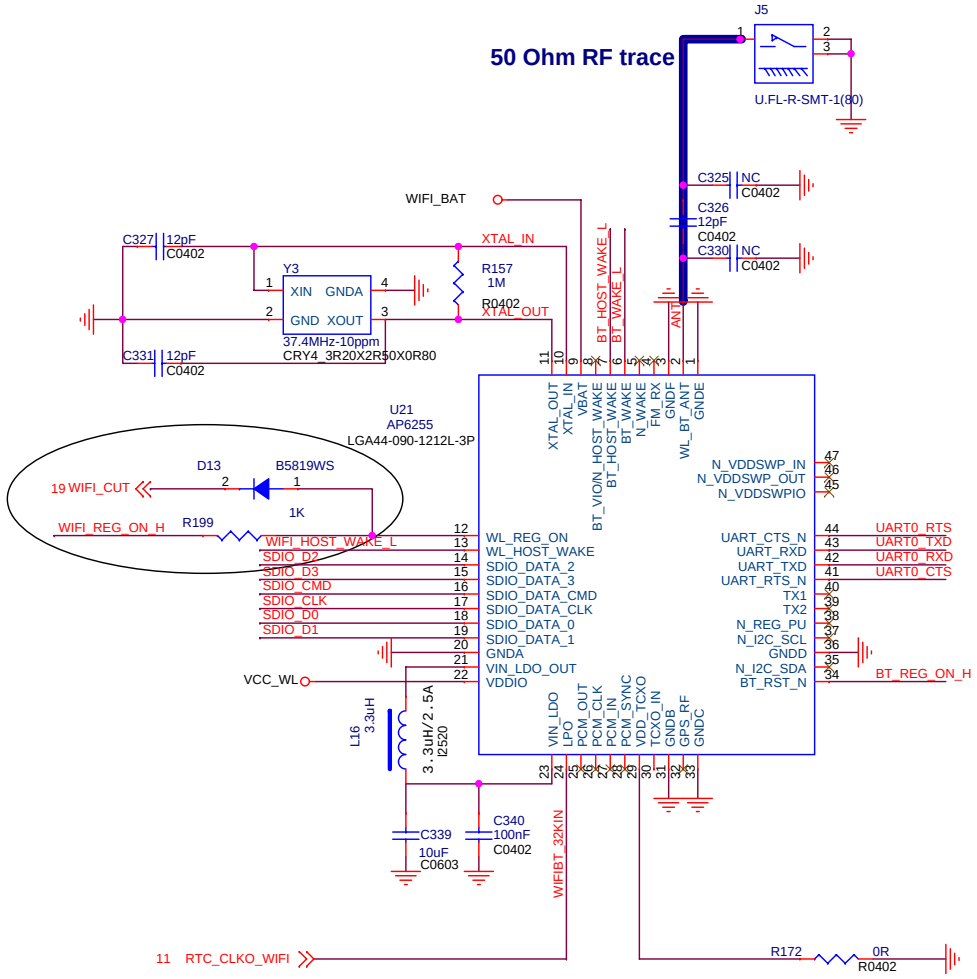

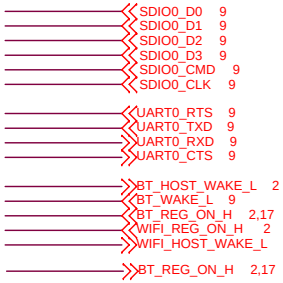

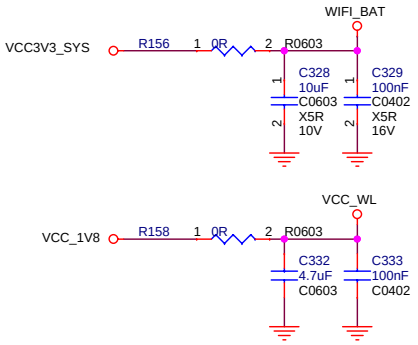

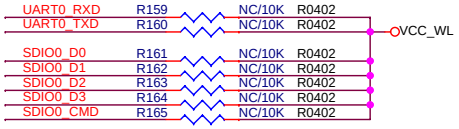

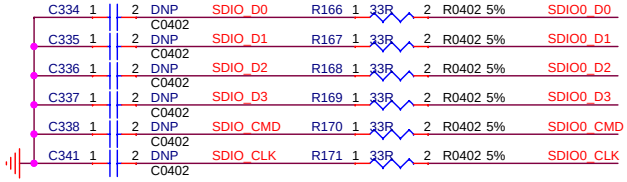

PINE64		
Title: Pinebook Pro		
Size: B	Document Number: WIFI	Rev: V2.1
Date:	Sheet 17 of 23	

CAM POWER

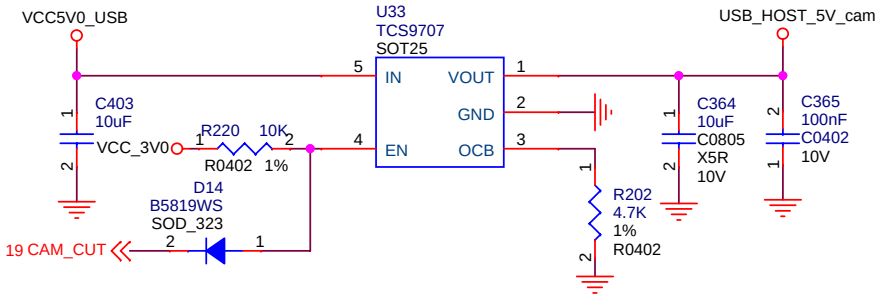

LCD DRIVER

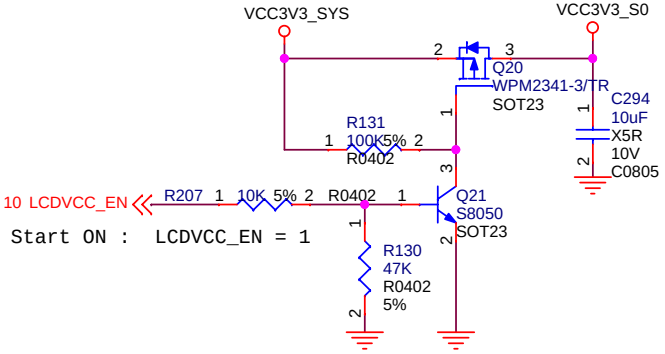

eDP Panel

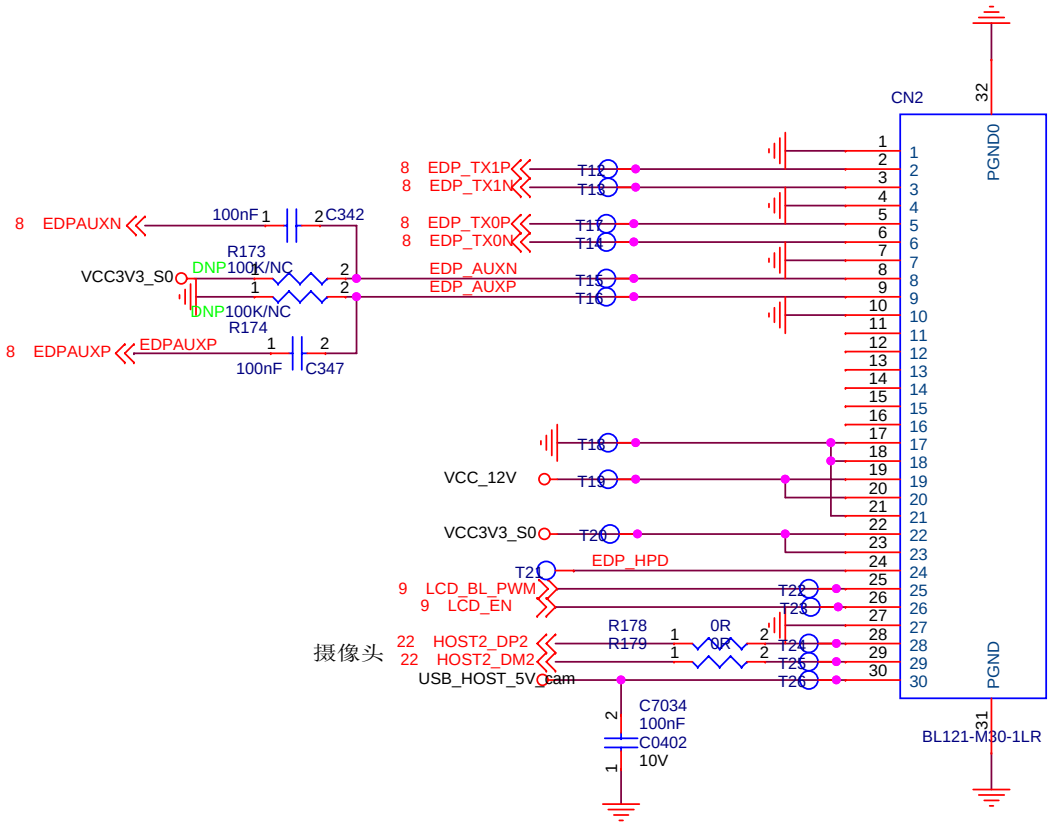

BACKLIGHT

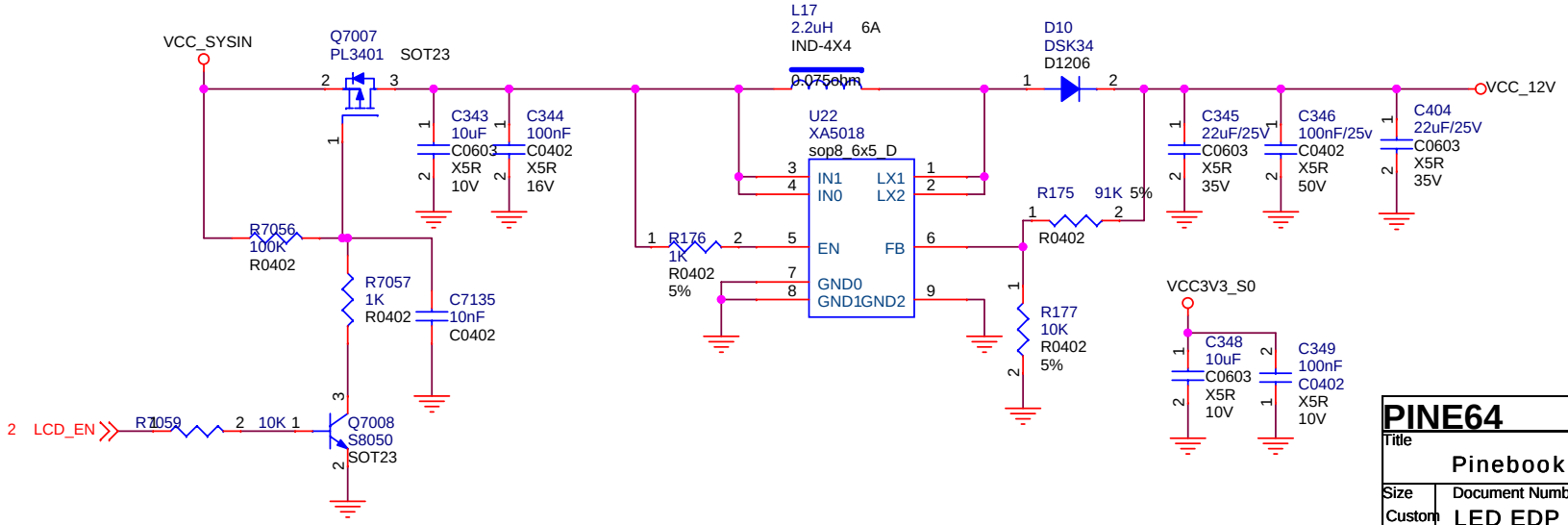

PINE64		
Title: Pinebook Pro		
Size: Custom	Document Number: LED EDP	Rev: V2.1
Date:	Sheet 18 of 23	

KEY Board Click Pad

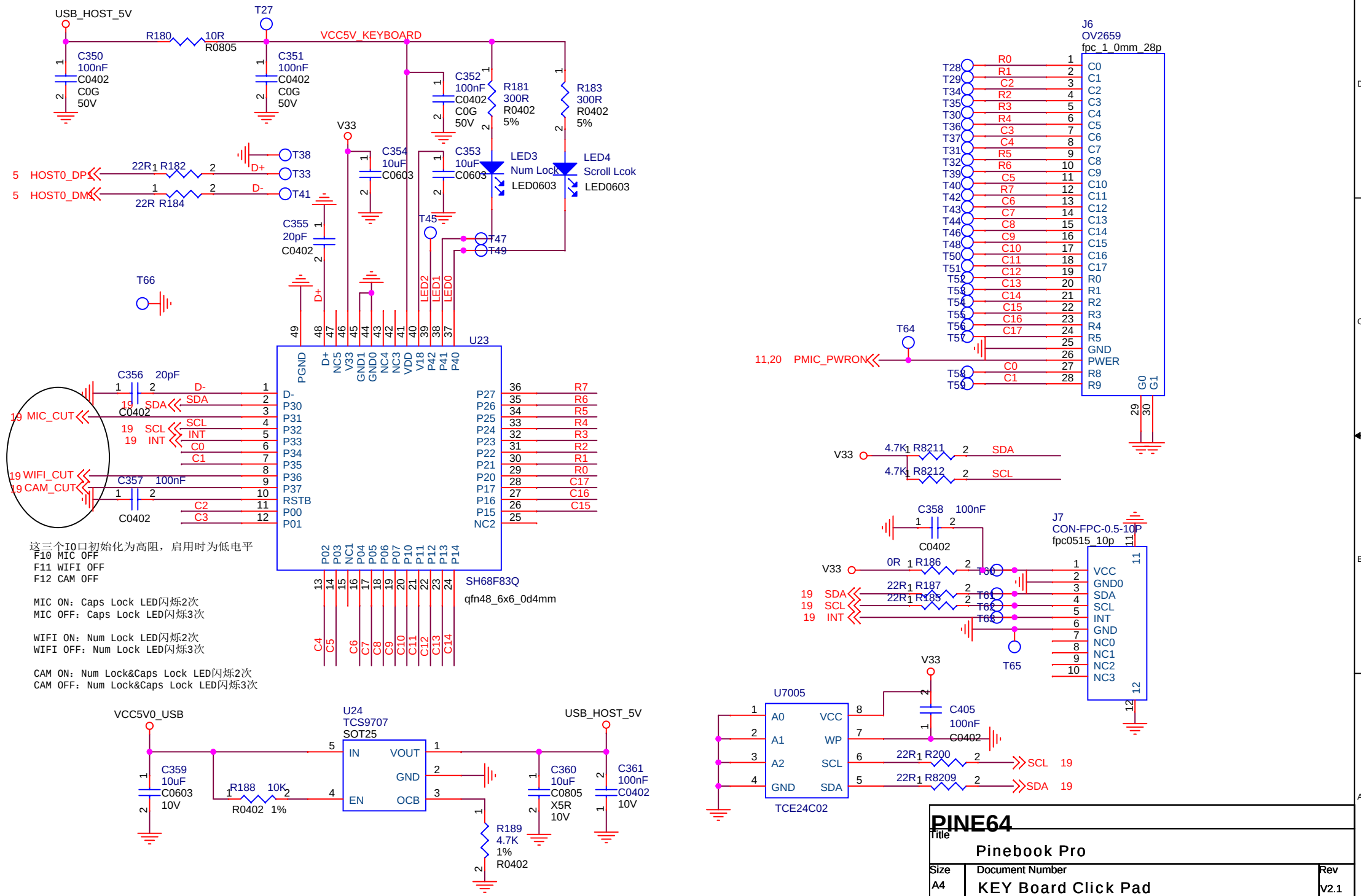

Title	PINE64 Pinebook Pro		
Size	Document Number		Rev
A4	KEY Board Click Pad		V2.1
Date:		Sheet 19 of 23	

小板连接器：耳机、SD卡、USB

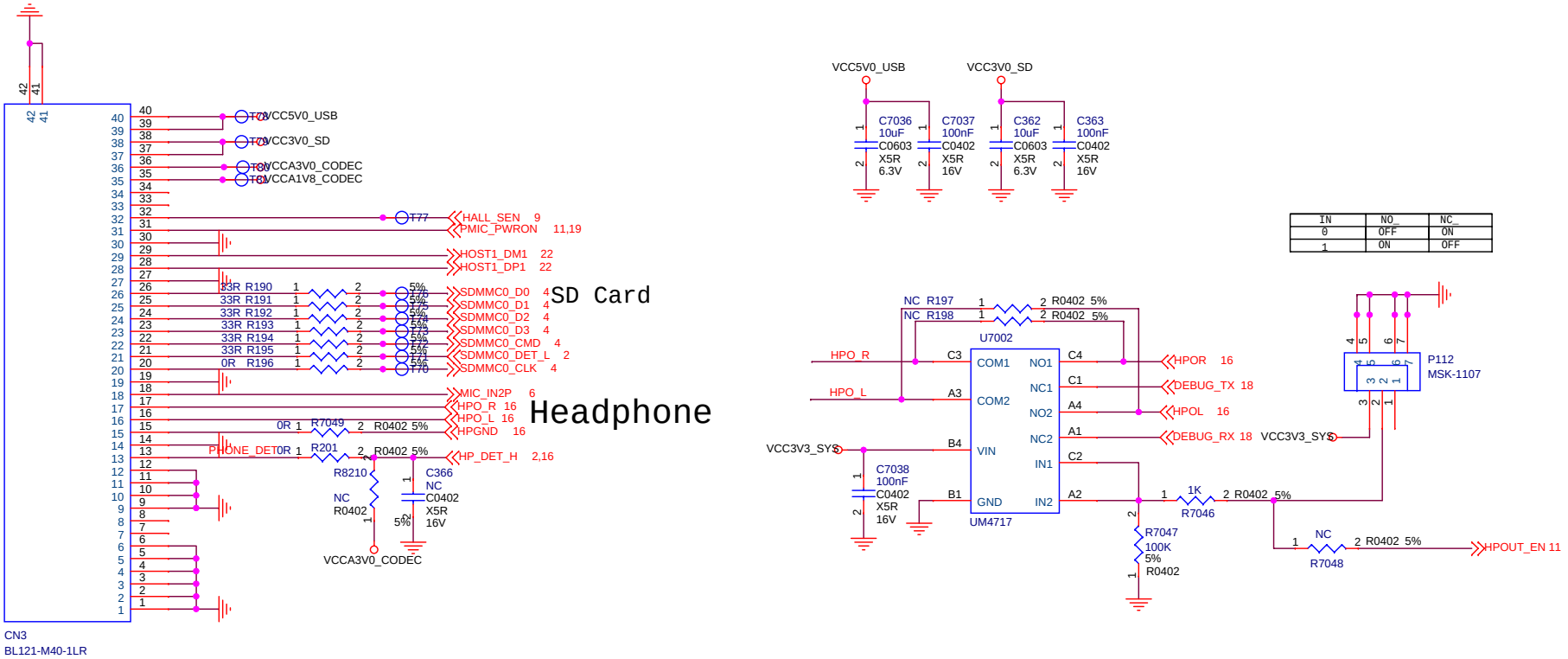

IN	NO_	NC_
0	OFF	ON
1	ON	OFF

PINE64			
Title: Pinebook Pro			
Size: B	Document Number: PJ-TF CARD-USB 2.0		Rev: V2.1
Date:	Sheet 20 of 23		

USB Type-C port

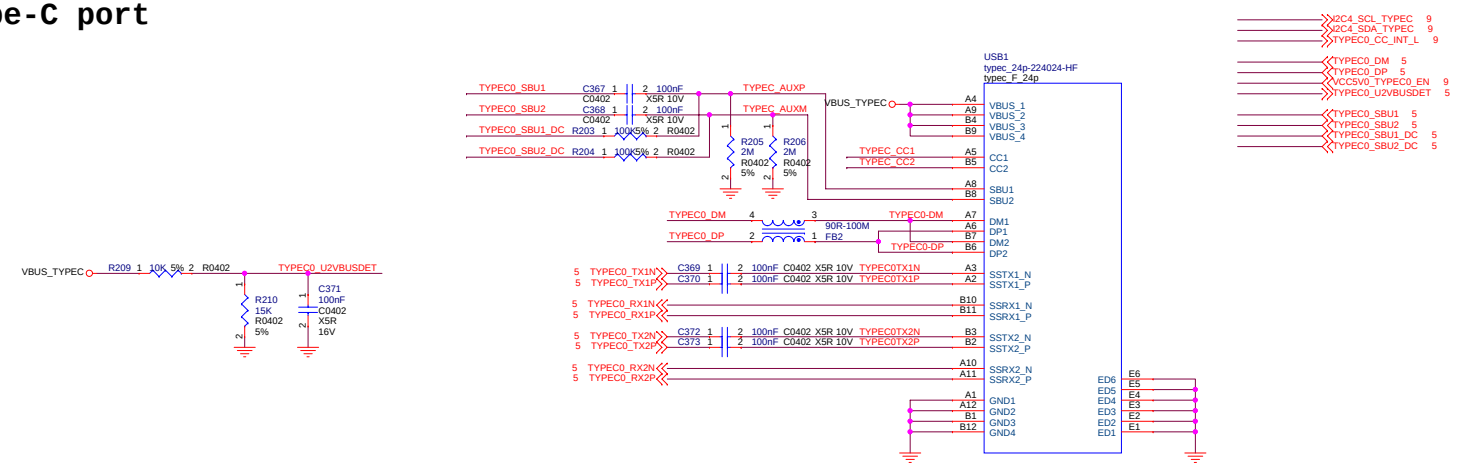

CC CTRL

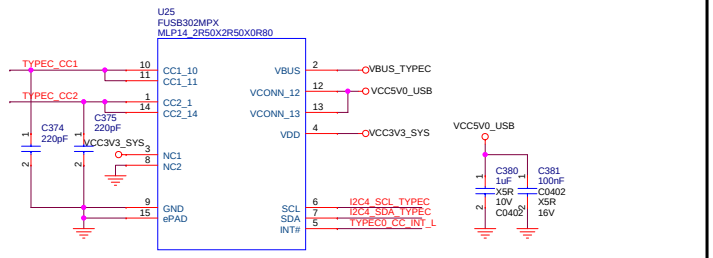

Limit switch

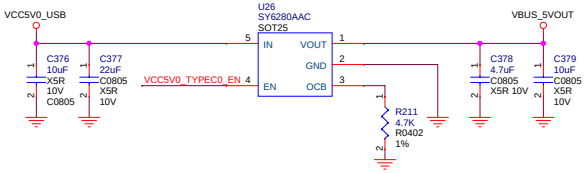

ESD

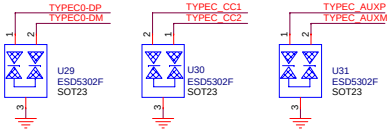

PINE64		
Title: Pinebook Pro		
Size: Custom	Document Number: TYPE-C	Rev: V2.1
Date:	Sheet 21 of 23	

USB HUB

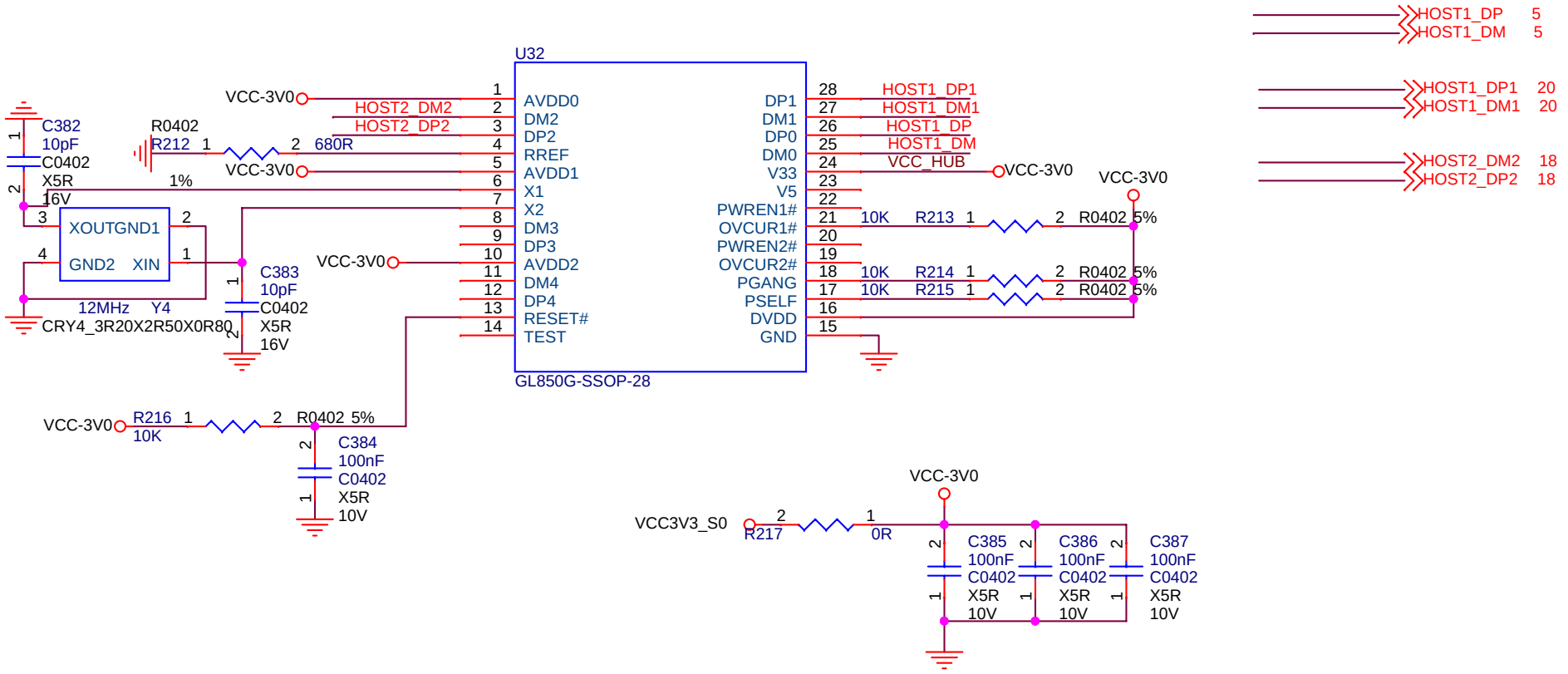

PINE64		
Title: Pinebook Pro		
Size: A	Document Number: USB HUB	Rev: V2.1
Date:	Sheet 22 of 23	

NGFF M.2 FPC

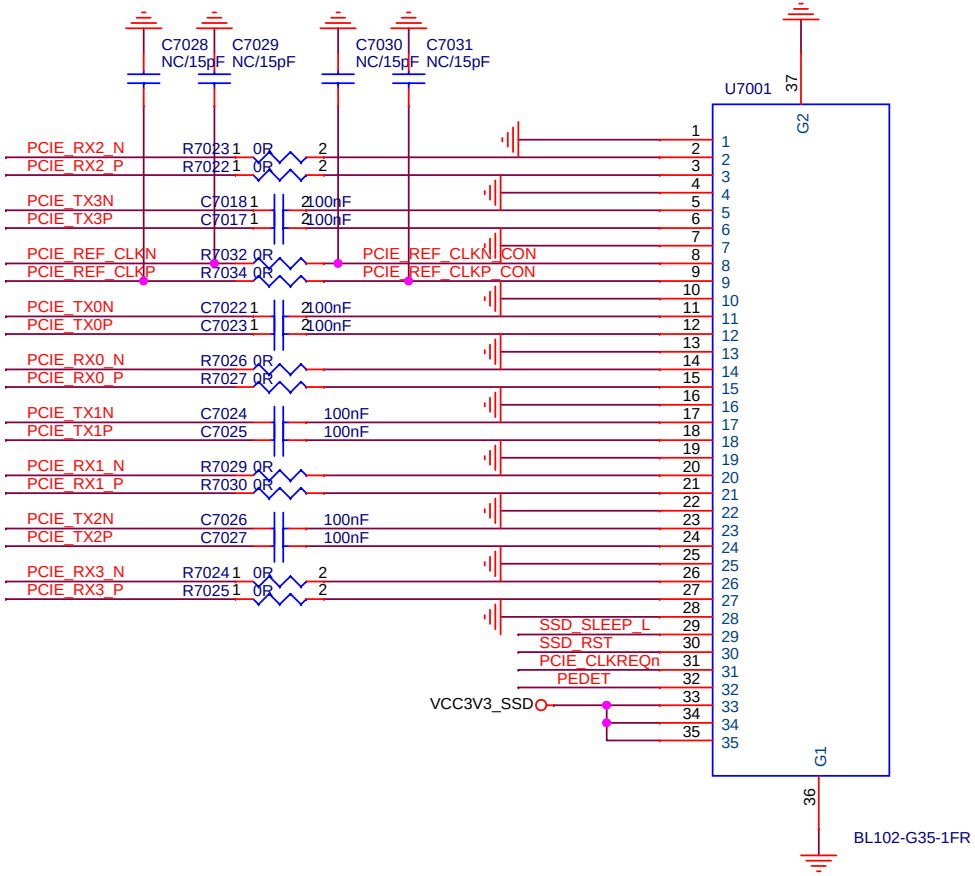

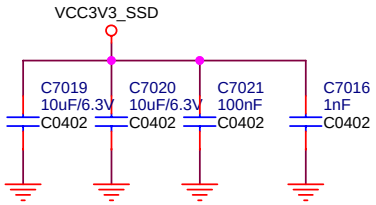

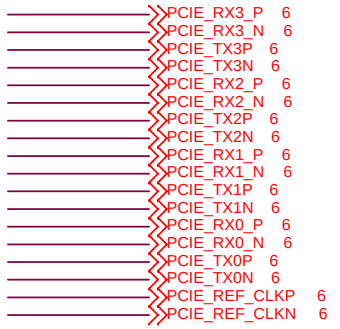

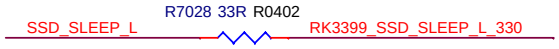

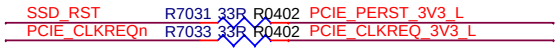

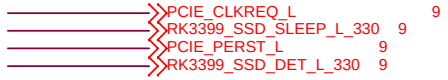

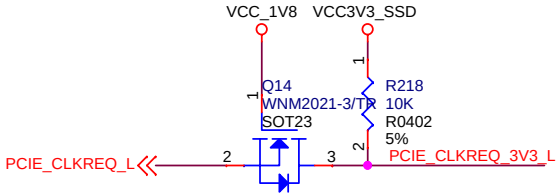

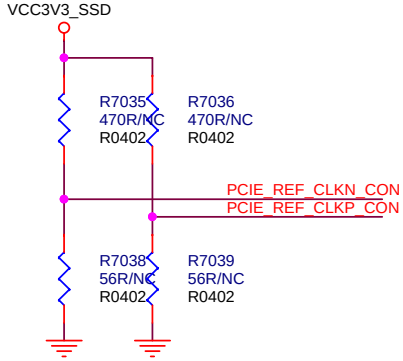

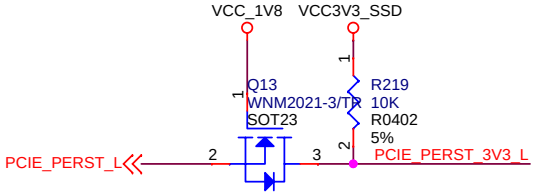

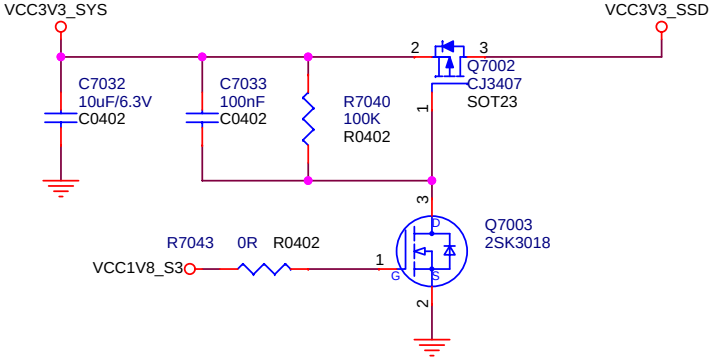

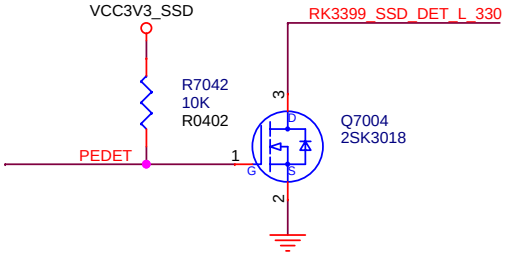

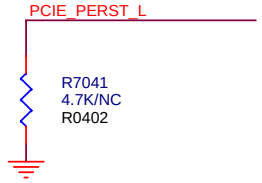

Title: PINE64 Pinebook Pro		
Size: Custom	Document Number: SSD	Rev: V2.1
Date:	Sheet 23 of 23	