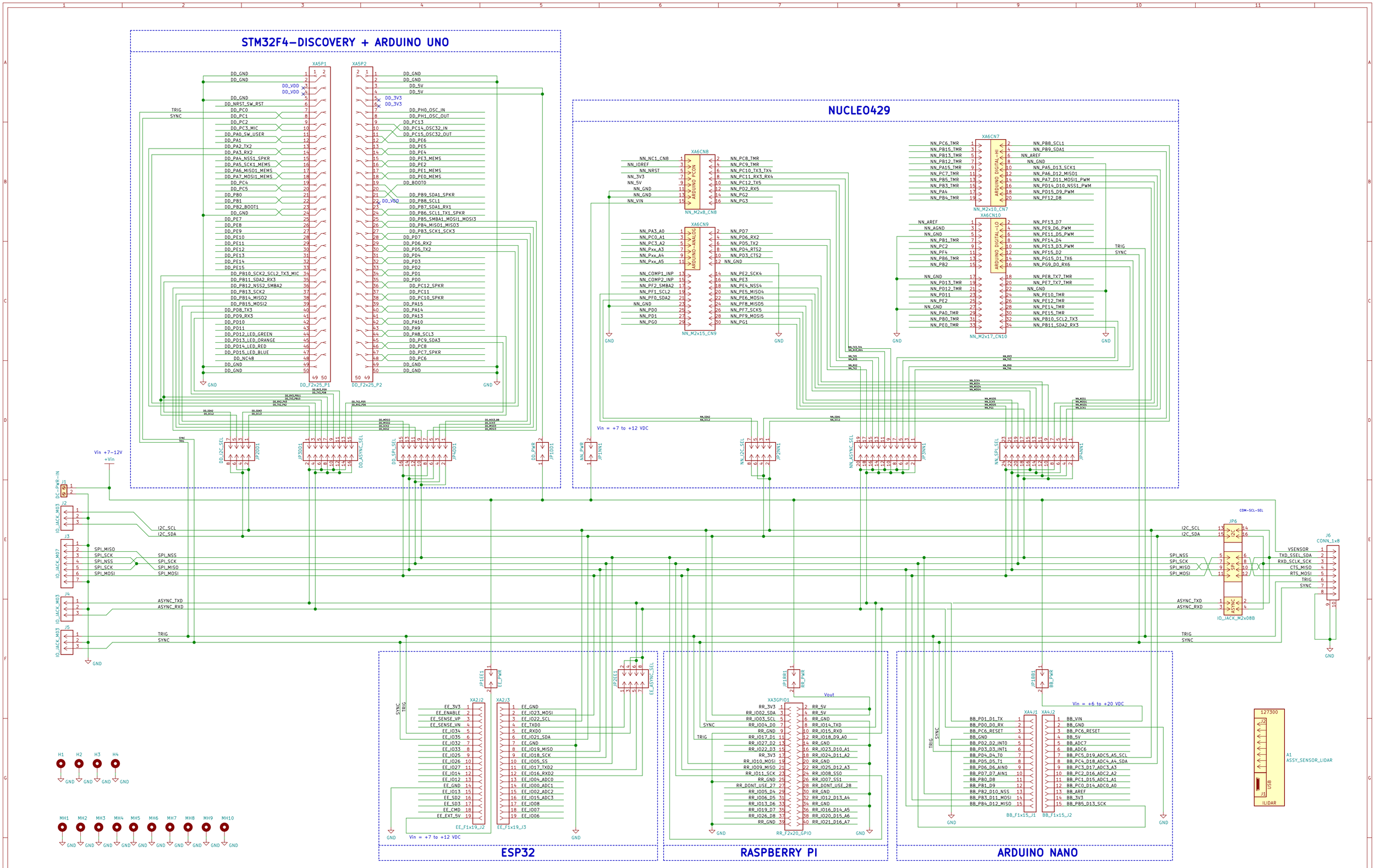


Sheet: /
File: hybohat.sch

**Title:**

| Size: A2 | Date: | Rev: |
|---|---|---|
| KiCad E.D.A. kicad (5.1.5-0-10_14) | | Id: 1/1 |