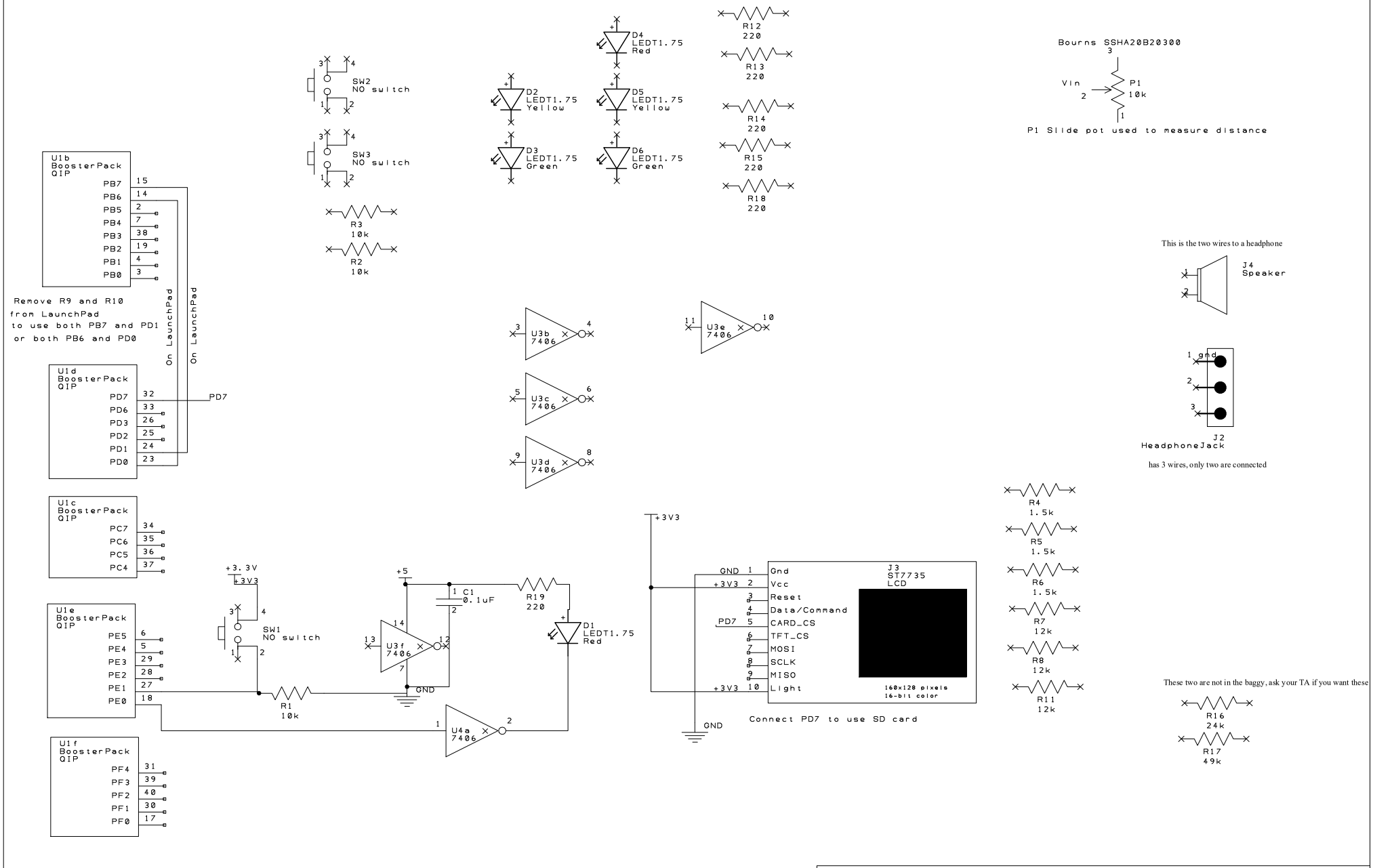

All resistors are 1/4 watt 5% carbon composition
C1 is ceramic Z5U
Switches are www.BGMicro.com SWT1043
Red LEDs. T1 3/4. 20mA Digikey 160-1087-ND
Yellow LEDs. T1 3/4. 20mA Digikey 160-1088-ND
Green LEDs. T1 3/4. 20mA Digikey 160-1089-ND
Slide pot. Bourns SSHA20B20300 www.AllElectronics.comSP-20K

University Of Texas At Austin	
Schematic Name: Lab 3 Schematic for EE319K	
Name(s): HYDER SHAD (UT EID: hs25796)	
Date: Febuary 21, 2016	**Semester:** Spring 2016

A1
frame