DHT 22 / AM2302
Temperature and Humidity Sensor
Datasheet

Contents:

1. Features & Application
2. Description
3. Technical Specification
4. Dimensions
5. Electrical connection diagram
6. Operating specifications
7. Electrical Characteristics
8. Attentions of application

1. Features & Application

* Full range temperature compensated
* Relative humidity and temperature measurement
* Calibrated digital signal
* Outstanding long-term stability
* Extra components not needed
* Long transmission distance
* Low power consumption
* 4 pins packaged and fully interchangeable

2. Description

DHT22 output calibrated digital signal. It utilizes exclusive digital-signal-collecting-technique and humidity sensing technology, assuring its reliability and stability.Its sensing elements is connected with 8-bit single-chip computer.
Every sensor of this model is temperature compensated and calibrated in accurate calibration chamber and the
calibration-coefficient is saved in type of programme in OTP memory, when the sensor is detecting, it will cite coefficient from memory.
Small size & low consumption & long transmission distance(20m) enable DHT22 to be suited in all kinds of harsh application occasions.
Single-row packaged with four pins, making the connection very convenient.

3. Technical Specification

Model	DHT22
Power supply	3.3-6V DC
Output signal	digital signal via single-bus
Sensing element	Polymer capacitor
Operating range	humidity 0-100%RH; temperature -40~80Celsius
Accuracy	humidity +-2%RH(Max +-5%RH); temperature <+-0.5Celsius
Resolution or sensitivity	humidity 0.1%RH; temperature 0.1Celsius
Repeatability	humidity +-1%RH; temperature +-0.2Celsius
Humidity hysteresis	+-0.3%RH
Long-term Stability	+-0.5%RH/year
Sensing period	Average: 2s
Interchangeability	fully interchangeable
Dimensions	small size 14*18*5.5mm; big size 22*28*5mm

4. Dimensions

Small size dimensions: (unit-mm)

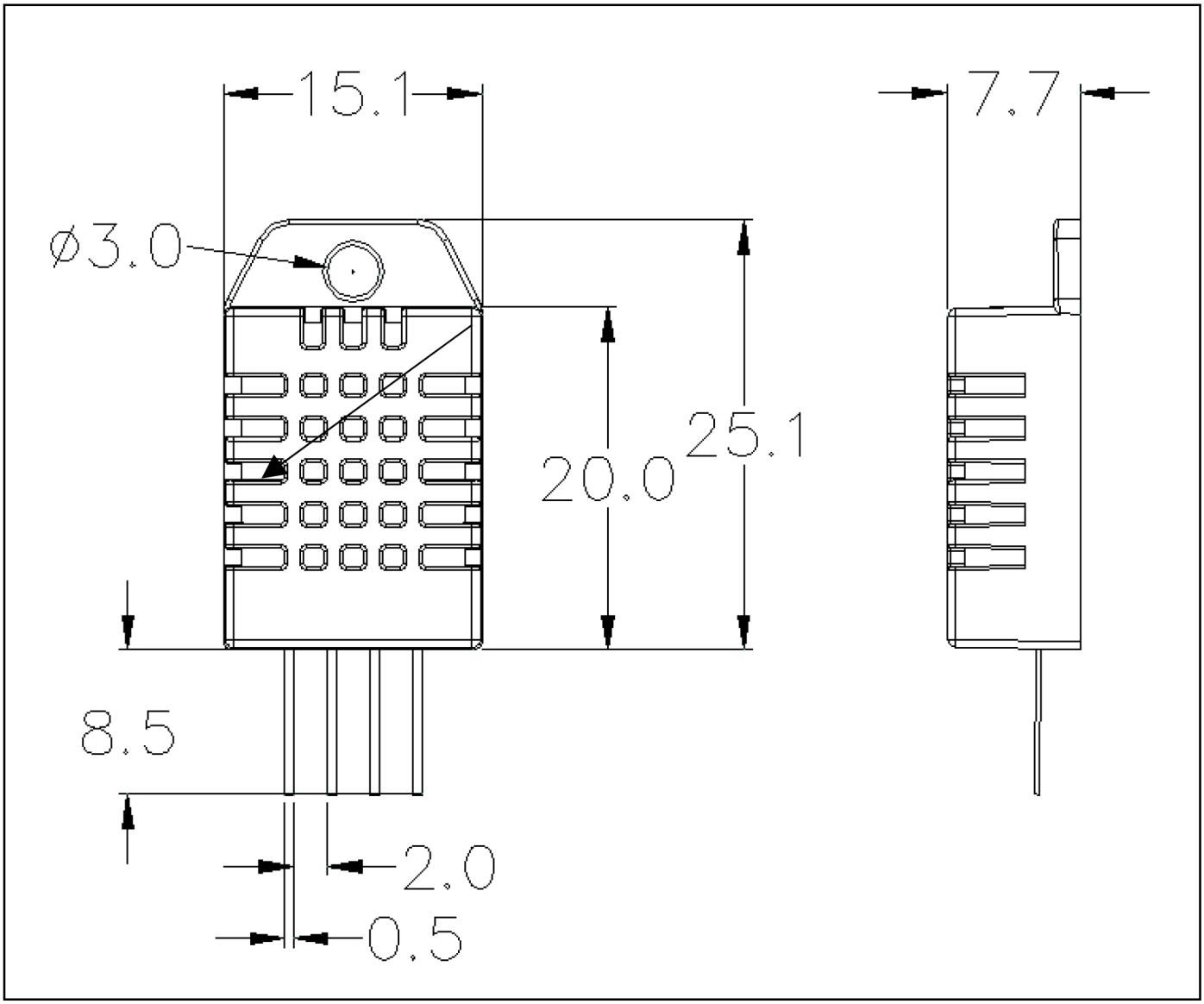

Pin sequence number: 1 2 3 4 (from left to right direction).

Pin	Function
1	VDD----power supply
2	DATA--signal
3	NULL
4	GND

5. Electrical connection diagram

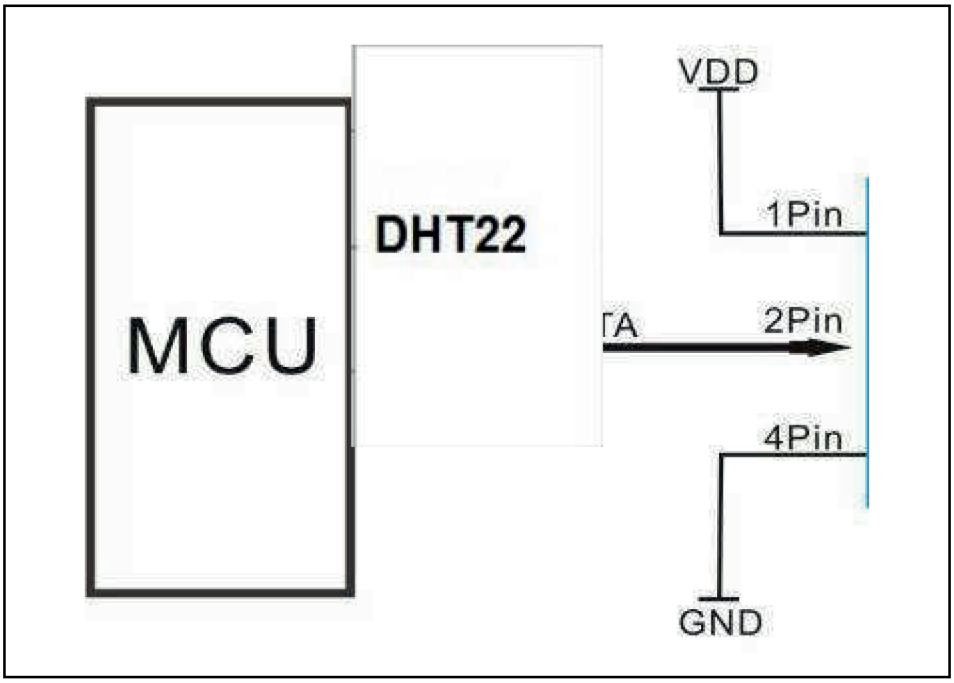

3Pin---NC, AM2302 is another name for DHT22

6. Operating specifications

(1) Power and Pins

Power's voltage should be 3.3-6V DC. When power is supplied to sensor, don't send any instruction to the sensor within one second to pass unstable status. One capacitor valued 100nF can be added between VDD and GND for wave filtering.

(2) Communication and signal

Single-bus data is used for communication between MCU and DHT22, it costs 5mS for single time communication.

Data is comprised of integral and decimal part, the following is the formula for data. DHT22 send out higher data bit firstly!

DATA=8 bit integral RH data+8 bit decimal RH data+8 bit integral T data+8 bit decimal T data+8 bit check-sum If the data transmission is right, check-sum should be the last 8 bit of "8 bit integral RH data+8 bit decimal RH data+8 bit integral T data+8 bit decimal T data".

When MCU send start signal, DHT22 change from low-power-consumption-mode to running-mode. When MCU finishs sending the start signal, DHT22 will send response signal of 40-bit data that reflect the relative humidity and temperature information to MCU.

Without start signal from MCU, DHT22 will not give response signal to MCU. One start signal for one time's response data that reflect the relative humidity and temperature information from DHT22. DHT22 will change to low-power-consumption-mode when data collecting finish if it don't receive start signal from MCU again.

(1) Check bellow picture for overall communication process:

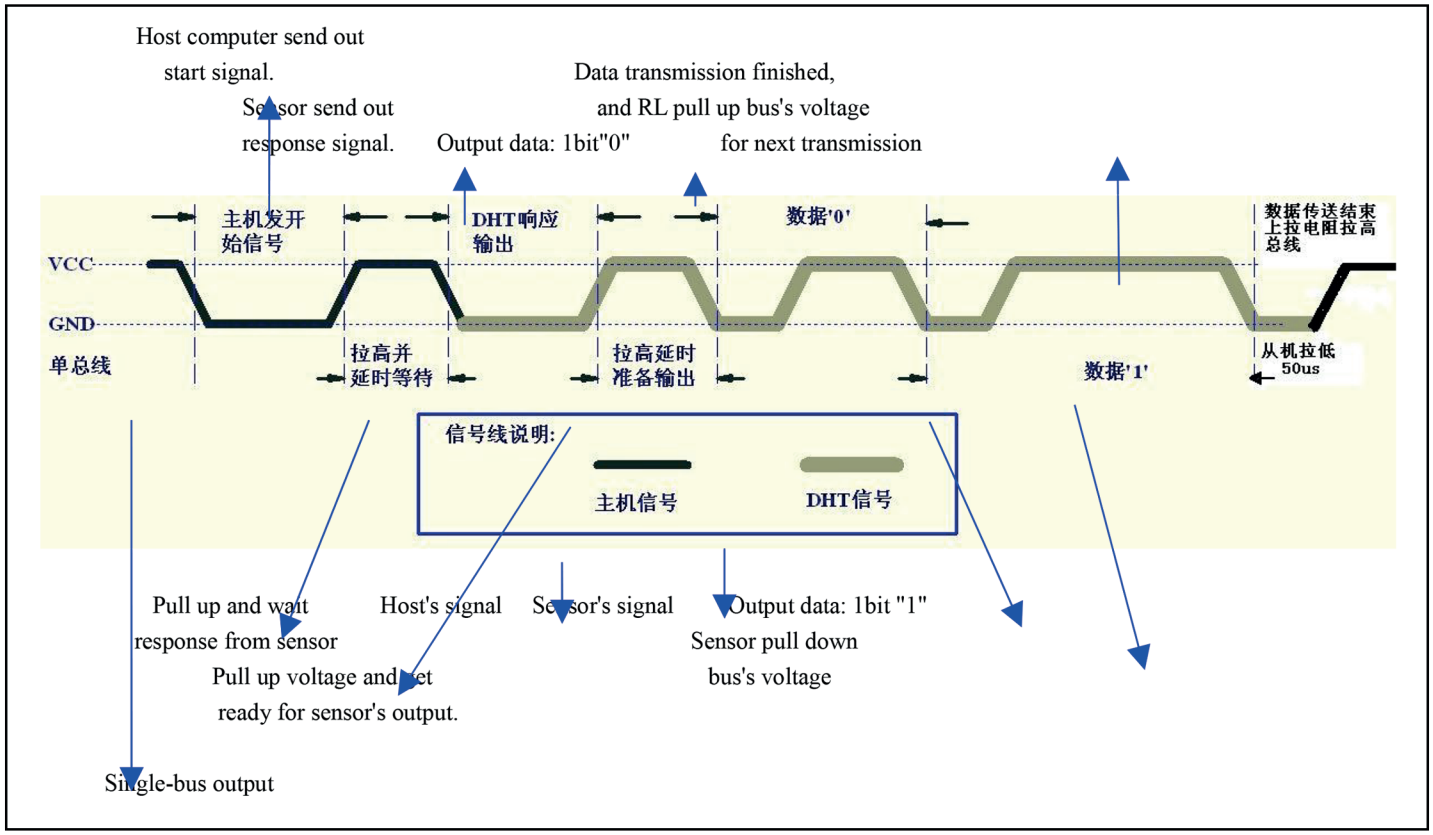

2) Step 1: MCU send out start signal to DHT22

Data-bus's free status is high voltage level. When communication between MCU and DHT22 begin, program of MCU will transform data-bus's voltage level from high to low level and this process must beyond at least 1ms to ensure DHT22 could detect MCU's signal, then MCU will wait 20-40us for DHT22's response.

Check bellow picture for step 1:

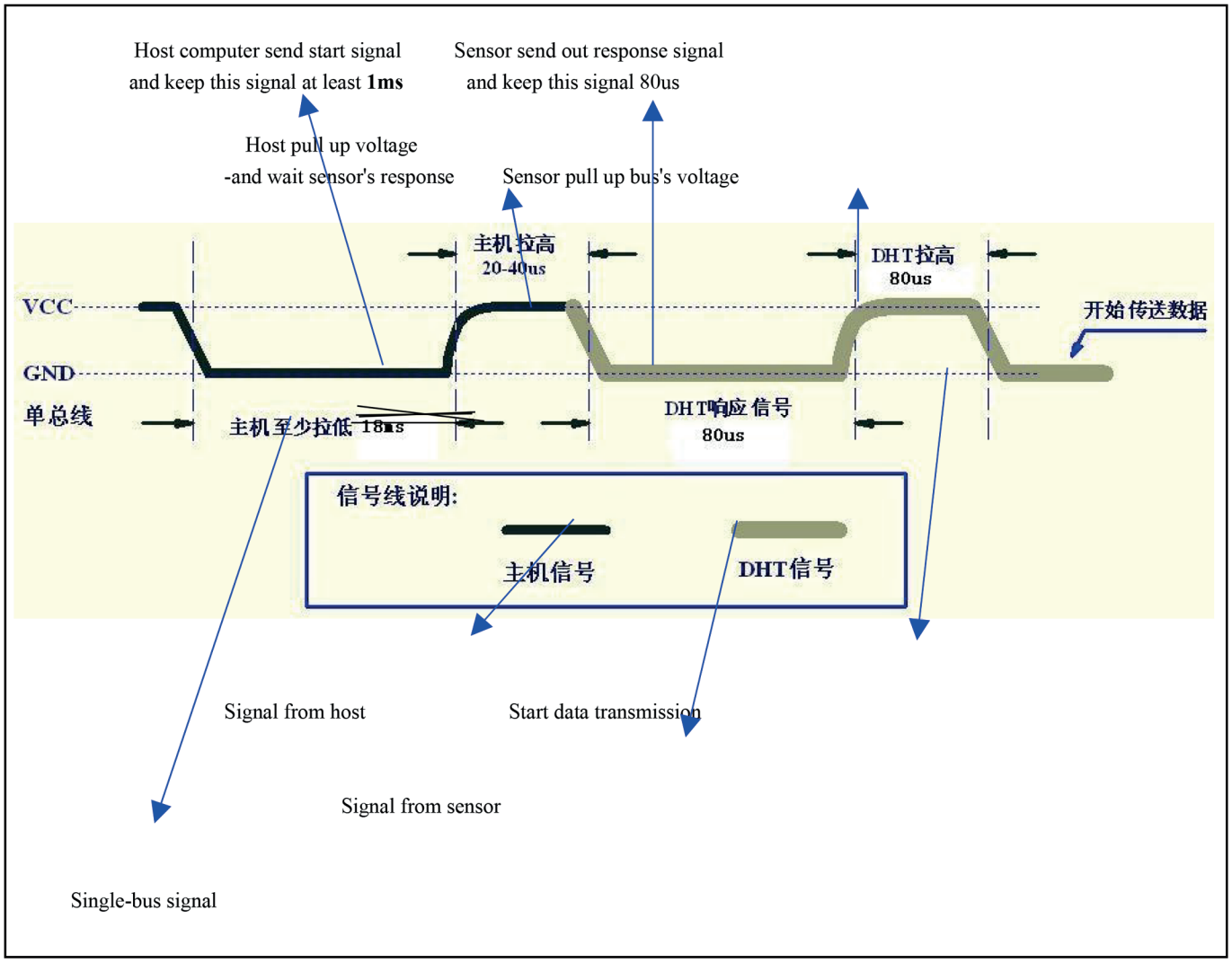

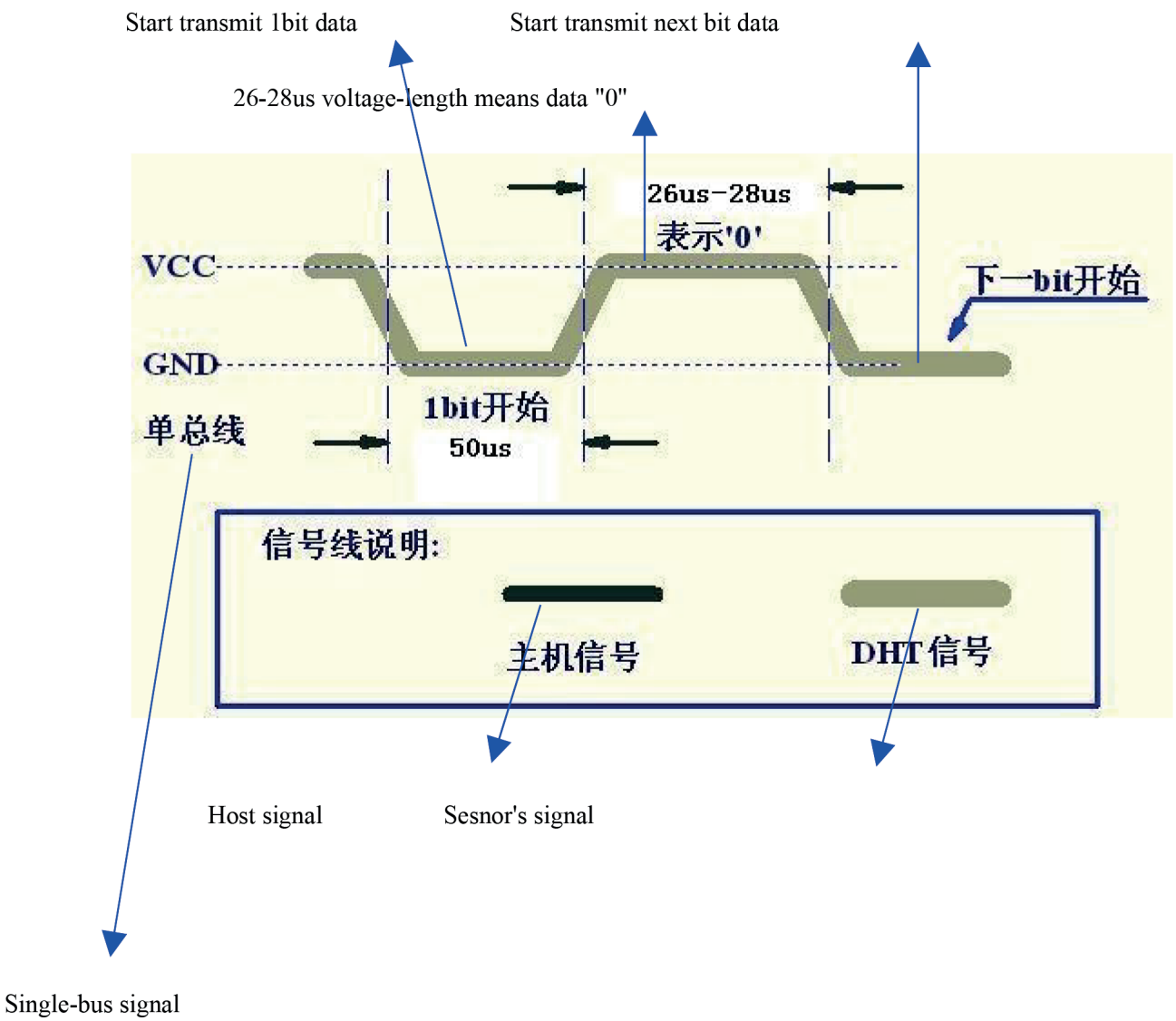
Start transmit 1bit data
Start transmit next bit data
26-28us voltage-length means data "0"
26us-28us
表示'0'
VCC
下一bit开始
GND
1bit开始
单总线
50us
信号线说明:
主机信号
DHT信号
Host signal
Sesnor's signal
Single-bus signal

Step 3: DHT22 send data to MCU

When DHT22 is sending data to MCU, every bit's transmission begin with low-voltage-level that last 50us, the following high-voltage-level signal's length decide the bit is "1" or "0".

Check bellow picture for step 3:

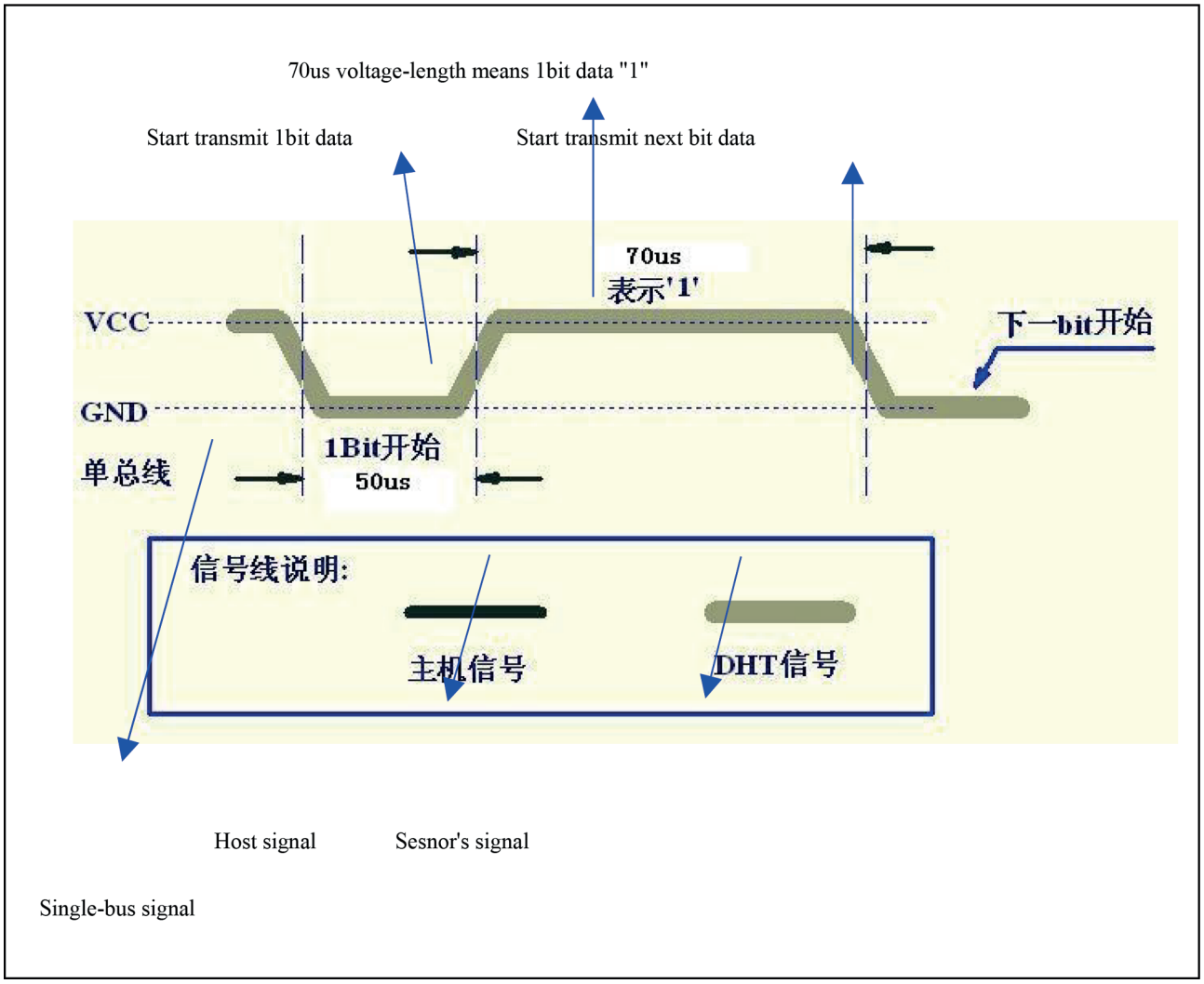

If signal from DHT22 is always high-voltage-level, it means DHT22 is not working properly, please check the electrical connection status.

7. Electrical Characteristics

Item	Condition	Min	Typical	Max	Unit
Power supply	DC	3.3	5	6	V
Current supply	Measuring	1		1.5	mA
	Stand-by	40	Null	50	uA
Collecting period	Second		2		Second

* Collecting period should be : >2 second.

8. Attentions of application

(1) Operating and storage conditions
We don't recommend the applying RH-range beyond the range stated in this specification. The DHT22 sensor can recover after working in non-normal operating condition to calibrated status, but will accelerate sensors' aging.

(2) Attentions to chemical materials
Vapor from chemical materials may interfere DHT22's sensitive-elements and debase DHT22's sensitivity.

(3) Disposal when (1) & (2) happens
Step one: Keep the DHT22 sensor at condition of Temperature 50~60Celsius, humidity <10%RH for 2 hours;
Step two: After step one, keep the DHT22 sensor at condition of Temperature 20~30Celsius, humidity >70%RH for 5 hours.

(4) Attention to temperature's affection
Relative humidity strongly depend on temperature, that is why we use temperature compensation technology to ensure accurate measurement of RH. But it's still be much better to keep the sensor at same temperature when sensing. DHT22 should be mounted at the place as far as possible from parts that may cause change to temperature.

(5) Attentions to light
Long time exposure to strong light and ultraviolet may debase DHT22's performance.

(6) Attentions to connection wires
The connection wires' quality will effect communication's quality and distance, high quality shielding-wire is recommended.

(7) Other attentions

* Welding temperature should be bellow 260Celsius.
* Avoid using the sensor under dew condition.
* Don't use this product in safety or emergency stop devices or any other occasion that failure of DHT22 may cause personal injury!