BOARD_NAME
MEDUSA-RM
FR2433-DK-R102Q16-02

## FARSENS TAG

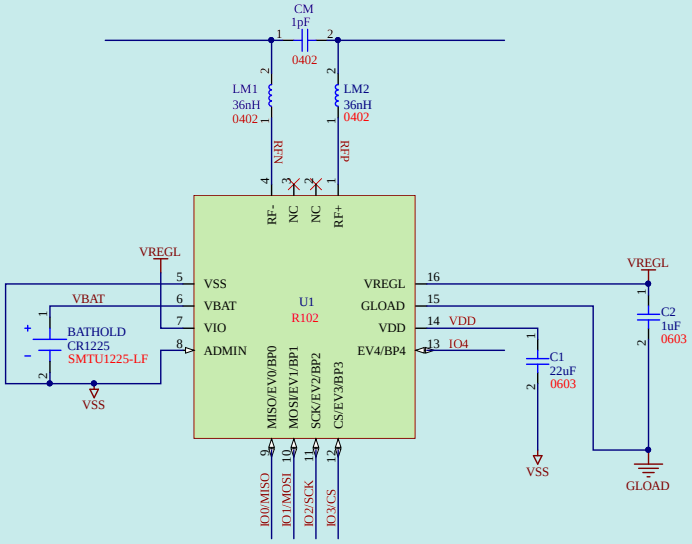


## PINOUT

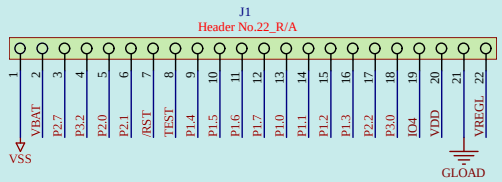


## MICROCONTROLLER

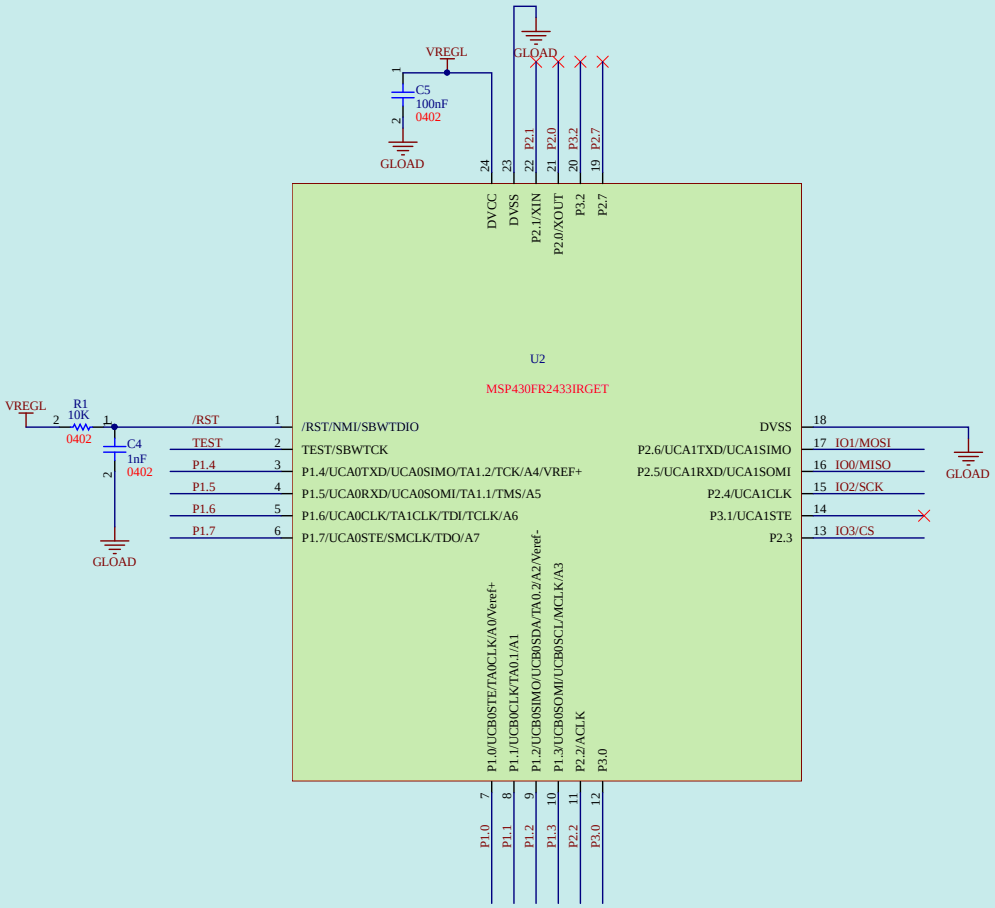


| Title | | |
|---|---|---|
| Size A3 | Number | Revision |
| Date: 12/01/2018 | Sheet of | |
| File: D:\REPOS\..\SCHEMATIC.SchDoc | Drawn By: | |