PHILIPS

Xitanium

LED driver

Datasheet

Xitanium Round Shape Highbay LED Drivers

Xi RHB 150W 0.52-0.84A 1-10V WL AUX 132S

9290 034 59080

Xitanium Round Shape Highbay (RHB) LED Drivers are designed to deliver reliable and efficient LED drivers in industrial applications. The WideLine family can operate on input voltage 100-277Vac and ensure 100% performance from 200-254Vac.

Features

- Digital and simple Adjustable Output Current (AOC) with e-set tool, based on NFC technology
- WideLine input voltage range: 100-277Vac
- Surge protection: 4/4kV (DM/CM)
- IP65 with 50,000 hours lifetime
- High efficiency: 95%
- 1-10V dimming + AUX power (12V, 200mA)

Benefits

- Reliable and repeatable adjustment of output current/voltage to save labor cost and time
- Easy to design-in and reduces SKUs
- Low maintenance cost and peace of mind in extreme conditions
- Enables various applications for energy saving

Application

- Highbay industrial lighting
- Warehouse lighting

Logistical data

Specification item	Value
Product name	Xi RHB 150W 0.52-0.84A 1-10V WL AUX 132S
Logistic code 12NC	9290 034 59080
Pieces per box	10

Electrical input data

Specification item	Value	Unit	Condition
Rated input voltage range	200...254	V_{ac}	Performance range
Rated input voltage	230	V_{ac}	
Rated input frequency	50...60	Hz	Performance range
Rated input current	0.75	A	@ rated output power @ rated input voltage
Max. input current	1.15	A	@ rated output power @ minimum performance input voltage
Rated input power	160.0	W	@ rated output power @ rated input voltage
Power factor	≥ 0.95		@ rated output power @ rated input voltage
Total harmonic distortion	10	%	@ rated output power @ rated input voltage
Efficiency	95.0	%	@ rated output power @ rated input voltage @max. Uout
Input voltage AC	85...305	V_{ac}	Operational range
Input frequency AC	47...63	Hz	Operational range
Standby Power (no load)	0.5	W	

Electrical output data

Specification item	Value	Unit	Condition
Regulation method	Constant Current		
Output voltage	160...260	V_{dc}	
Output voltage max.	330	V	Maximum output voltage (rms)
Output current	520...840	mA	
Output current min programmable	520	mA	
Min output current	52	mA	
Output current tolerance ±	5	%	@full load
Output current ripple LF	≤ 5	%	Ripple = peak / average, < 3kHz
Output current ripple HF	≤ 15	%	
Output P_{st}^{LM}	≤ 0.8		In entire operating window
Output SVM	≤ 0.3		In entire operating window
Output power	8.3...150.0	W	
Minimum performance output power	105	W	Power factor > 0.9 and THD < 20%

Control interfaces

Specification item	Value	Unit	Condition
Control method	1-10V		Output current amplitude dimming, 1-10V acc. IEC60929
Dimming range	10...100	%	Default range
Isolation controls input to output	Reinforced		acc. IEC61347-1

Wiring and Connections

Specification item	Value	Unit	Type
Input wire cross-section	1.0	mm^2	3-wire cable
Output wire cross-section	1.0	mm^2	2-wire cable
Control wire cross-section	0.33	mm^2	3-wire cable
Maximum cable length	2	m	Total length of wiring including LED module, one way

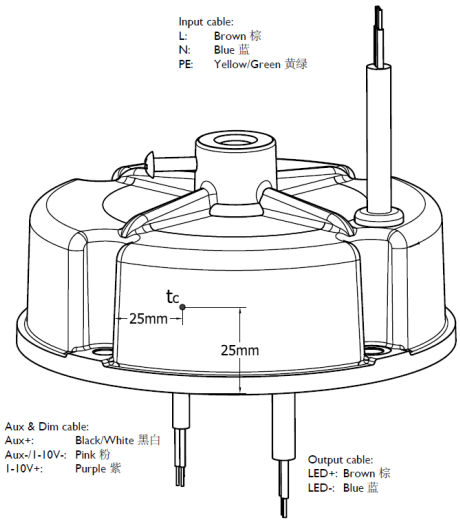

Isolation

Insulation per IEC61347-1	Mains	Output	Dim & AUX	PE
Mains	-	Non	Double	Basic
Output	Non	-	Double	Basic
Dim & AUX	Double	Double	-	Basic
PE	Basic	Basic	Basic	-

Dimensions and weight

Specification item	Value	Unit	Tolerance (mm)
Length (A1)	132	mm	
Mounting hole distance (A2)	113	mm	
Length (A3)	113	mm	
Width (B1)	24	mm	
Height (C1)	62.3	mm	
Height (C2)	42.3	mm	
Mounting hole diameter (D1)	7	mm	
Mounting hole diameter (D2)	13.2	mm	
Input cable length (E1)	300	mm	
Output cable length (E2)	300	mm	
Control cable length (E3)	250	mm	
Weight	775	gram	

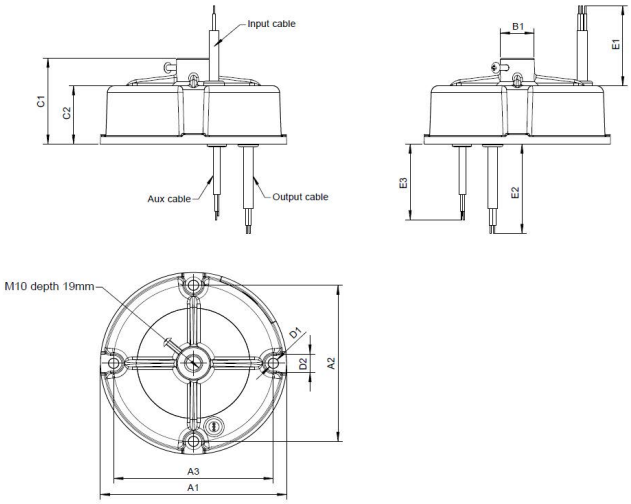

Operational temperatures and humidity

Specification item	Value	Unit	Condition
Ambient temperature	-40...+60	°C	Higher ambient temperature allowed as long as Tcase-max is not exceeded
Tcase-max	80	°C	Maximum temperature measured at T_{case}-point
Tcase-life	70	°C	Measured at T_{case}-point
Maximum housing temperature	110	°C	In case of a failure, inherent by design
Relative humidity	10...90	%	Non-condensing

Lifetime

Specification item	Value	Unit	Condition
Driver lifetime	50,000	hours	Measured temperature at Tcase-point is Tcase-max. Maximum failures = 10%

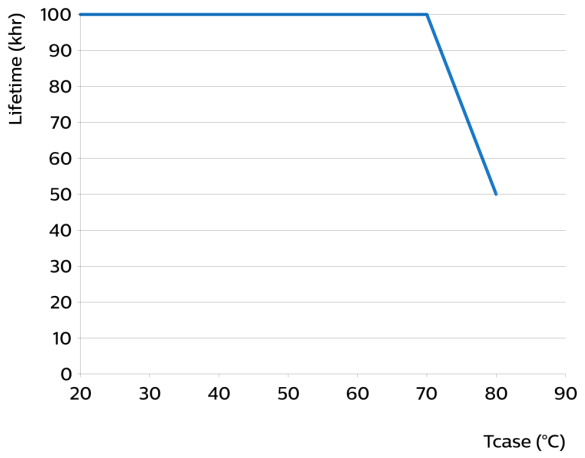

Maximum failures = 10%

Storage temperature and humidity

Specification item	Value	Unit	Condition
Ambient temperature	-40...+80	°C	
Relative humidity	5...95	%	Non-condensing

Programmable features

Specification item	Available	Default setting	Condition
Set Adjustable Output Current (AOC)	NFC	520 mA	

Non-programmable features

Specification item	Value		Condition
Open load protection	Yes		Automatic recovering
Short circuit protection	Yes		Automatic recovering
Over power protection	No		
Hot wiring	No		
Suitable for fixtures with protection class	I		per IEC60598
Overtemperature protection	Yes		Automatic recovering

Inrush current

Specification item	Value	Unit	Condition
Inrush current	76	A	Input voltage 230V
Inrush peak width	159	µs	Input voltage 230 V, measured at 50% height
Drivers / MCB 16A type B	≤ 9	pcs	Indicative value at 230V

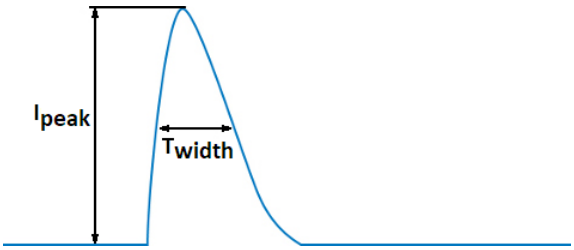

Please refer to the driver design in guide if you use other MCB-types.

If several mini circuit breakers are used directly side-by-side (without distance pieces) a correction factor of 80% has to be applied to the rated current

Driver touch current / protective conductor current / earth leakage current

Specification item	Value	Unit	Condition
Typical Protective Conductor Current (ins. Class I)	1	mA rms	Acc. IEC60598-1. LED module contribution not included

Surge immunity

Specification item	Value	Unit	Condition
Mains surge immunity (diff. mode)	4	kV	Acc. IEC61000-4-5. 2 Ohm, 1.2/50us, 8/20us
Mains surge immunity (comm. mode)	4	kV	Acc. IEC61000-4-5. 12 Ohm, 1.2/50us, 8/20us

Application Info (Approbation)

Specification item	Value
Approval marks and Certifications	CB / CCC / CE / ENEC / RCM / UKCA
Ingress Protection classification (IP)	65
Mounting Type	Independent

Graphs

Operating window

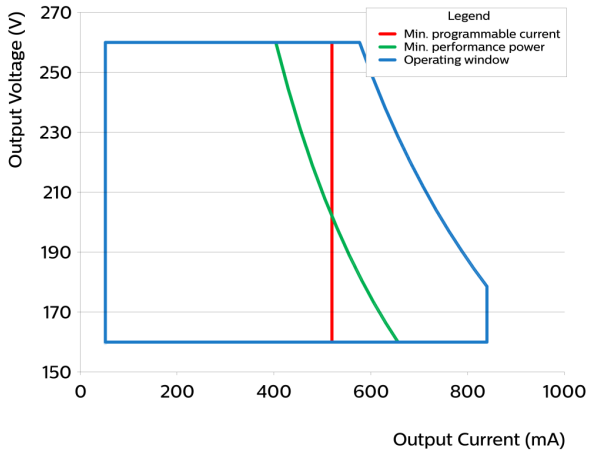

Mains Guard

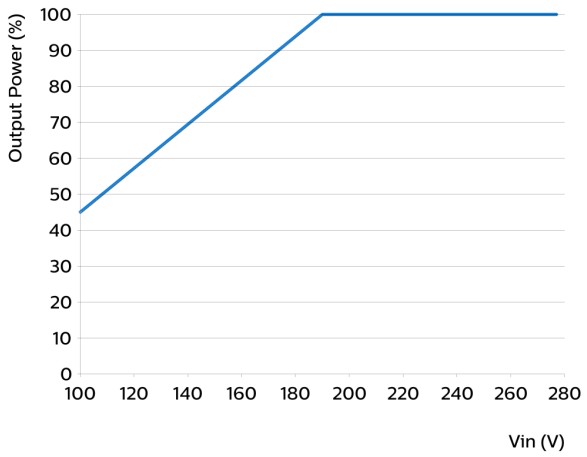

Power factor versus output power

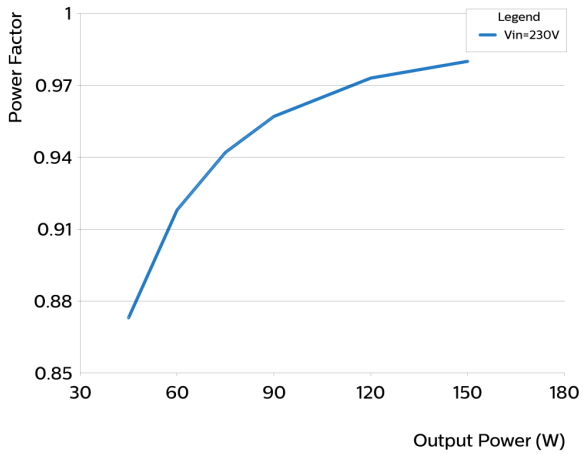

Efficiency versus output power

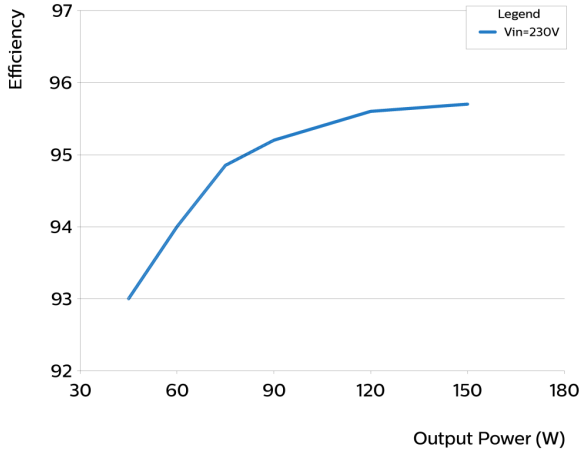

THD versus output power

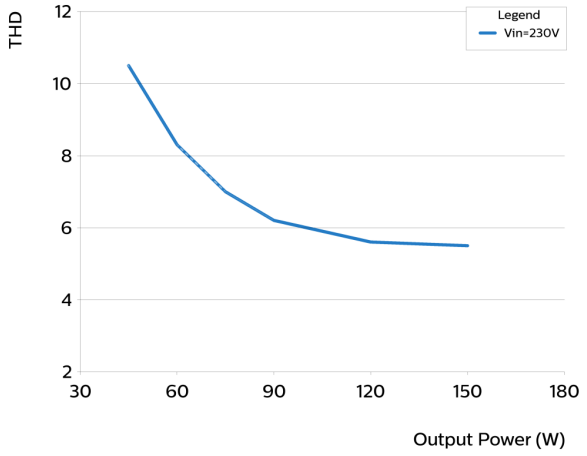

I_{out} as function of 1-10V interface

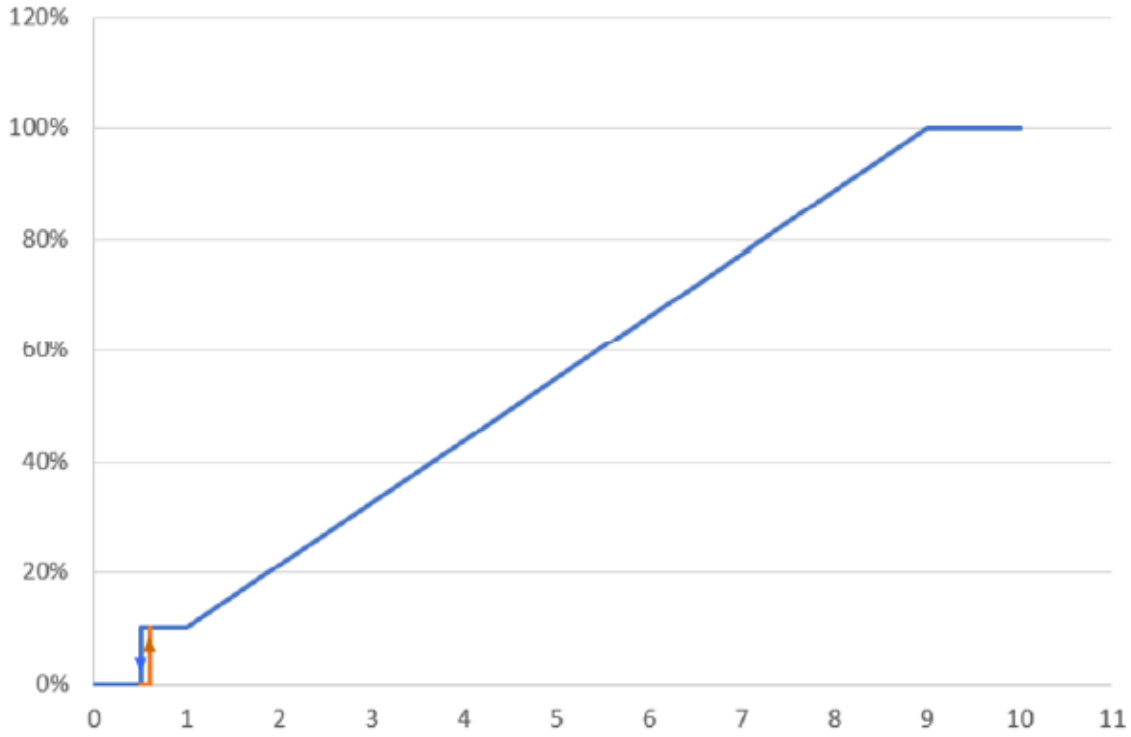

I_out as function of 0-10V interface

©2024 Signify Holding, IBRS 10461, 5600 VB, NL. All rights reserved.
UK importer address: Signify Commercial UK Limited, 3, Guildford Business Park, GU2 8XG.

The information provided herein is subject to change without notice. Signify does not give any representation or warranty as to the accuracy or completeness of the information included herein and shall not be liable for any action in reliance thereon. The information presented in this document is not intended as any commercial offer and does not form part of any quotation or contract, unless otherwise agreed by Signify.

Philips and the Philips Shield Emblem are registered trademarks of Koninklijke Philips N.V. All other trademarks are owned by Signify Holding or their respective owners.
Date of release: January 19, 2024 v1