## Warning

All installation works must be performed by a qualified installer and must comply with applicable laws and regulations.

Hyundai Robot

Hi7-N251031MMEN1

# Hi7-N Controller Maintenance Manual

- Hi7-N00(U)-A0
- Hi7-N30(U)-A0
- Hi7-N80(U)-A0
- Hi7-N20(U)-A0

HD HYUNDAI ROBOTICS

The information provided in this manual is the property of HDHyundai Robotics.
The manual may not be copied, in part or in full,
nor redistributed without a prior written consent from HDHyundai Robotics.
It may not be provided to any third party, nor used for any other purposes.

The manual may be changed without prior notification.

Printed in Korea – Oct. 2025. 1st Edition
Copyright © 2025 by HDHyundai Robotics Co., Ltd

Overview . . . . . 1-1
Copyrights . . . . . 1-1
Safety Cautions . . . . . 1-2

1. Safety . . . . . 1-7

1.1. Applicable Standards . . . . . 1-8
1.2. Safety Performance . . . . . 1-10
1.3. Safety Trainings . . . . . 1-10
1.4. Risk Assessment . . . . . 1-12
1.5. Potential Risks . . . . . 1-13
1.6. Effectiveness and Responsibility . . . . . 1-13
1.7. Safety Labels . . . . . 1-14
1.8. Safety Functions . . . . . 1-17
1.8.1. Main Safety Functions . . . . . 1-17
1.8.2. Other Related Functions . . . . . 1-19
1.9. Stop . . . . . 1-19
1.10. Safety Measures When Installing . . . . . 1-20
1.10.1. Installing the Safety Guard . . . . . 1-20
1.10.2. Placement of the Robot and Peripheral Devices . . . . . 1-22
1.10.3. Installation of the Robot . . . . . 1-24
1.11. Safety Works When Operating the Robot . . . . . 1-26
1.11.1. Safety Measures When Operting the Robot . . . . . 1-26
1.11.2. Safety Measures When Trial-Operating the Robot . . . . . 1-28
1.11.3. Safety Measures for Auto Operation . . . . . 1-29
1.12. Safety Measures When Entering Inside the Safety Fence . . . . . 1-30
1.13. Safety Measures When Maintaining and Inspecting . . . . . 1-31
1.13.1. Safety Measures When Maintaining and Inspecting the Controller . . . . . 1-31
1.13.2. Safety Measures When Maintaining and Inspecting the Robot System and Manipulator . . . . . 1-31
1.13.3. Actions to Take after Maintenance and Inspection . . . . . 1-32
1.14. Safety Related to End Effctors . . . . . 1-33
1.14.1. Gripper . . . . . 1-33
1.14.2. Tools/Workpieces . . . . . 1-33
1.14.3. Pneumatic / Hydraulic Systems . . . . . 1-33

2. Details of Specifications . . . . . 2-1

2.1. Details of Specifications of Each Controller Model . . . . . 2-2
2.2. Exterior of the Controller . . . . . 2-5

3. Installation of the Controller . . . . . 3-1

3.1. Configuration . . . . . 3-2
3.1.1. Basic Configuration . . . . . 3-2

3.1.2. Checking of Various Name Plates . . . . . 3-3
**3.2. Installation and Use Environmets . . . . . 3-7**
**3.3. Transport of the Controller . . . . . 3-8**
3.3.1. Packing . . . . . 3-8
3.3.2. Transport (Modifying the Weight) . . . . . 3-8
3.3.3. Unpacking . . . . . 3-10
**3.4. Storage of the Controller . . . . . 3-11**
**3.5. Discarding of the Controller . . . . . 3-11**
**3.6. Connection . . . . . 3-12**
3.6.1. Connection of the Teach Pendant . . . . . 3-12
3.6.2. Connection of the Manipulator and Controller . . . . . 3-13
3.6.3. Connectin of the Controller and Primary Power . . . . . 3-13
3.6.4. The Controller and Grounding . . . . . 3-16
3.6.5. Other Cautions . . . . . 3-16
3.6.6. Connection of the Ethernet Port for the User . . . . . 3-17

4. **Basic Configuration of the Controller . . . . . 4-1**

**4.1. Configuration . . . . . 4-2**
**4.2. Placement of Parts . . . . . 4-3**
**4.3. Functions of the Individual Components . . . . . 4-7**
4.3.1. Main Module (H6COM-T) . . . . . 4-9
4.3.2. Safety Module (BD642) . . . . . 4-11
4.3.3. Backplane Board (BD604) . . . . . 4-29
4.3.4. Drive Module . . . . . 4-31
4.3.5. Power Supply Module (H7PSM) . . . . . 4-53
4.3.6. Teach Pendant (TP630) . . . . . 4-59

5. **Optional Components of the Controller . . . . . 5-1**

**5.1. PCI Communication Card . . . . . 5-3**
5.1.1. Overview . . . . . 5-3
5.1.2. Configuration of the PCI Communication Card . . . . . 5-4
5.1.3. Front Part of the PCI Communication Card . . . . . 5-5
**5.2. Brake Release Unit . . . . . 5-6**
5.2.1. Overview . . . . . 5-6
5.2.2. Brake Release Switch . . . . . 5-6
5.2.3. Power and Connectors . . . . . 5-8
5.2.4. Brake Release Unit Status Display LEDs . . . . . 5-10
**5.3. Remote IO . . . . . 5-11**
5.3.1. Overview . . . . . 5-11
5.3.2. Communication Module (of Crevis) . . . . . 5-12
5.3.3. IO and Other Modules (of Crevis) . . . . . 5-12
**5.4. Option Safety IO Module(BD680) . . . . . 5-14**
5.4.1. Overview . . . . . 5-14
5.4.2. Connector . . . . . 5-14

5.4.3. Device for display . . . . . 5-15
5.4.4. Device for setting . . . . . 5-18
5.4.5. Connection for safety output . . . . . 5-19
5.4.6. Connection for safety inpit . . . . . 5-21
**5.5. User DIO . . . . . 5-24**
5.5.1. Overview . . . . . 5-24
5.5.2. Information of hardware . . . . . 5-25
**5.6. Safety communication board(BD671) . . . . . 5-34**
5.6.1. Overview . . . . . 5-34
5.6.2. Information of hardware . . . . . 5-34

6. **Periodic Inspections . . . . . 6-1**

**6.1. Inspection Schedule . . . . . 6-2**
**6.2. General Cautions for Periodic Inspections . . . . . 6-3**
**6.3. General Inspections . . . . . 6-4**
**6.4. First Inspection (Inspection When Reaching 750 Hours) . . . . . 6-5**
**6.5. Cyclic Inspections . . . . . 6-6**
**6.6. Inspection When Going on a Long Vacation . . . . . 6-8**
**6.7. Maintenance Parts . . . . . 6-9**

**Appendices . . . . . i**

**Rules on Occupational Safety and Health Standards, and Notice for Safety Inspection . . . . . i**
**Quality Assurance . . . . . vi**

# Table of Figures

Figure 1.1 Safety Lables . . . . . 1-14
Figure 1.2 Emergency Stop Buttons on the Controller and Teach Pendant . . . . . 1-17
Figure 1.3 Connection of the Additional Emergency Stop Device . . . . . 1-18
Figure 1.4 Connection of the Safety Fence . . . . . 1-20
Figure 1.5 Beam Type Safety Fence for the LCD Handling Pobot . . . . . 1-23
Figure 1.6 Cylinder Type Safety Fence for the Industrial Robot . . . . . 1-24
Figure 2.1 Front Exterior of the Controller . . . . . 2-5
Figure 3.1 Basic Installation Configuration of the Industrial Robot . . . . . 3-2
Figure 3.2 Controller's Labels . . . . . 3-3
Figure 3.3 Controller Wire Connection Position . . . . . 3-9
Figure 3.4 Transport of the Controller by Using a Forklift . . . . . 3-10
Figure 3.5 Connection of Hi7-N**(U) Teach Pendant . . . . . 3-12
Figure 3.6 Connection of the Manipulator and Controller (Hi7-N**(U)) . . . . . 3-13
Figure 3.7 Primary Power Connection Part of Hi7-N**(U) Controller . . . . . 3-14
Figure 3.8 Power Ground Terminal of the Controller . . . . . 3-16
Figure 4.1 Hi7-N**(U) Controller . . . . . 4-2
Figure 4.2 Teach Pendant TP630 . . . . . 4-2
Figure 4.3 Placement of Parts on the Front Exterior of the Hi7-N00(U)/N30(U)/N80(U) Controller . . . . . 4-4
Figure 4.4 Placement of Parts on the Front Interior of the Hi7-N00(U)/N30(U)/N80(U) Controller . . . . . 4-5
Figure 4.5 Placement of Parts on the Back of the Hi7-N00(U)/N30(U)/N80(U) Controller . . . 4-5
Figure 4.6 Hi7-N00(U),N30(u),N80(U) Controller Transformer Box . . . . . 4-6
Figure 4.7 Components of the Control module . . . . . 4-8
Figure 4.8 H6COM-T . . . . . 4-9
Figure 4.9 Placement of the Connectors and Switches of the BD642 (Safety IO Board) . . . 4-11
Figure 4.10 Top Board Display Layout of Servo/Safety Module (BD642) . . . . . 4-13
Figure 4.11 Front Display Layout of Servo/Safety Module (BD642) . . . . . 4-16
Figure 4.12 Segment State Display Description . . . . . 4-19
Figure 4.13 Description of the Setting Devices of the BD642 (Safety IO Board) . . . . . 4-20
Figure 4.14 Actual Photo of Servo/Safety Module (BD642), and Position of Safety Output Connector (CNSO1) . . . . . 4-21
Figure 4.15 Safety Output Wiring with Internal Power Supply (NPN Type) for Servo/Safety Module (BD642) . . . . . 4-22
Figure 4.16 Safety Output Wiring with Internal Power Supply (PNP Type) for Servo/Safety Module (BD642) . . . . . 4-22
Figure 4.17 Safety Output Wiring with External Power Supply (NPN Type) for Servo/Safety Module (BD642) . . . . . 4-23
Figure 4.18 Safety Output Wiring with External Power Supply (PNP Type) for Servo/Safety Module (BD642) . . . . . 4-23
Figure 4.19 Actual Photo of Servo/Safety Module (BD642), and Position of Safety Input Connector (CNSI1) . . . . . 4-24
Figure 4.20 Safety Input Factory Setting of Servo/Safety Module (BD642) . . . . . 4-25
Figure 4.21 Safety Input Wiring with Internal Power Supply (NPN Type) for Servo/Safety Module

(BD642) . . . . . 4-26
Figure 4.22 Safety Input Wiring with Internal Power Supply (PNP Type) for Servo/Safety Module (BD642) . . . . . 4-26
Figure 4.23 Safety Input Wiring with External Power Supply (NPN Type) for Servo/Safety Module (BD642) . . . . . 4-27
Figure 4.24 Safety Input Wiring with External Power Supply (PNP Type) for Servo/Safety Module (BD642) . . . . . 4-28
Figure 4.25 Backplane Board Structure . . . . . 4-29
Figure 4.26 Backplane Board Connectors . . . . . 4-29
Figure 4.27 Connector Configuration of Backplane Board . . . . . 4-30
Figure 4.28 Component Layout of BD651V60 and BD651V70 . . . . . 4-35
Figure 4.29 Component Layout of BD652V60 and BD652V70 . . . . . 4-38
Figure 4.30 Component Layout of BD653V60 . . . . . 4-43
Figure 4.31 Component Layout of BD654V60 . . . . . 4-45
Figure 4.32 Component Layout of BD658V60 for H6AD1X . . . . . 4-49
Figure 4.33 Component Layout of BD659V60 for H6AD1Z . . . . . 4-51
Figure 4.34 Exterior of H6PSM (Hi7-N Controller Power Supply Module) . . . . . 4-53
Figure 4.35 Power System of the Hi7-N Controller . . . . . 4-54
Figure 4.36 Connectors of the Electronic Board (BD6C3) . . . . . 4-55
Figure 4.37 LEDs of BD6C3 . . . . . 4-57
Figure 4.38 Exterior of the Teach Pendant TP630 . . . . . 4-59
Figure 5.1 Exterior of the PCI Communication Card . . . . . 5-4
Figure 5.2 Front Part of the PCI Communication Card . . . . . 5-5
Figure 5.3 Switches and Status Checking LEDs of the Brake Release Unit . . . . . 5-7
Figure 5.4 Switches and Connectors of the Brake Release Unit . . . . . 5-8
Figure 5.5 Example of Configuration of Commercial Remote IO . . . . . 5-11
Figure 5.6 Connector Layout of Optional Safety IO Module (BD680) . . . . . 5-14
Figure 5.7 Display Device Layout of Optional Safety IO Module (BD680) . . . . . 5-15
Figure 5.8 Front Display Layout of Optional Safety IO Module (BD680) . . . . . 5-16
Figure 5.9 Setting Device Layout of Optional Safety IO Module (BD680) . . . . . 5-18
Figure 5.10 Actual Photo of Optional Safety IO Module (BD680), and Position of Safety Output Connector . . . . . 5-19
Figure 5.11 Safety Output Wiring with Internal Power Supply for Optional Safety IO Module (BD680) . . . . . 5-20
Figure 5.12 Safety Output Wiring with External Power Supply for Optional Safety IO Module (BD680) . . . . . 5-20
Figure 5.13 Actual Photo of Optional Safety IO Module (BD680), and Position of Safety Input Connector . . . . . 5-21
Figure 5.14 Safety Input Wiring with Internal Power Supply (NPN Type) for Optional Safety IO Module (BD680) . . . . . 5-22
Figure 5.15 Safety Input Wiring with Internal Power Supply (PNP Type) for Optional Safety IO Module (BD680) . . . . . 5-22
Figure 5.16 Safety Input Wiring with External Power Supply (NPN Type) for Optional Safety IO Module (BD680) . . . . . 5-23
Figure 5.17 Safety Input Wiring with External Power Supply (PNP Type) for Optional Safety IO Module (BD680) . . . . . 5-23
Figure 6.1 Inspection Schedule . . . . . 6-2

# List of Tables

Table 1-1 Safety Performance of Safety Modules . . . . . 1-10
Table 1-2 Safety Labels . . . . . 1-15
Table 1-3 Installation Standards of the Safety Fence . . . . . 1-21
Table 1-4 Status of the robot when it stop mode . . . . . 1-28
Table 2-1 Details of Specification of Each Controller Model . . . . . 2-2
Table 2-2 Power Requirements . . . . . 2-4
Table 3-1 Label Type . . . . . 3-3
Table 3-2 Power Requirements . . . . . 3-15
Table 3-3 Recommended Minimum Cable Thickness . . . . . 3-15
Table 3-4 Pin Description (RJ45 Connector Specification; RJ 45P Shield) . . . . . 3-17
Table 4-1 Names of Individual Parts of the Hi7-N00/N30/N80 Controller . . . . . 4-3
Table 4-2 Summary of Functions of the Individual Components . . . . . 4-7
Table 4-3 Types and Usage of the Connectors of Hi7COM-T . . . . . 4-10
Table 4-4 Types and Usage of the Connectors of the BD642 (Safety IO Board) . . . . . 4-12
Table 4-5 Top Board Display Description of Servo/Safety Module (BD642) . . . . . 4-13
Table 4-6 Front Display Description of Servo/Safety Module (BD642) . . . . . 4-16
Table 4-7 Front LED Description of Servo/Safety Module (BD642) . . . . . 4-18
Table 4-8 Description of the SW1 setting devices of BD642 (Safety IO Module) . . . . . 4-20
Table 4-9 Types and Functions of Backplane Board Connectors . . . . . 4-30
Table 4-10 Configuration of H6D6X (Medium-Sized 6 Axes Integrated Drive Module) . . . . 4-31
Table 4-11 Type Symbol of the Medium-Sized 6 Axes Integrated Drive Module . . . . . 4-32
Table 4-12 Specification of the Medium-Sized 6 Axes Integrated Drive Module . . . . . 4-32
Table 4-13 Symbols of the IPM of the medium-sized 6 axes drive module . . . . . 4-33
Table 4-14 Symbols of the Hall Sensors of the medium-sized 6 axes drive module . . . . . 4-33
Table 4-15 Description of the Connectors of BD651 . . . . . 4-35
Table 4-16 Description of LEDs of BD651 . . . . . 4-36
Table 4-17 Description of the Connectors of BD652 . . . . . 4-39
Table 4-18 Description of the LEDs of BD652 . . . . . 4-39
Table 4-19 Configuration of H6D6A (Small-Sized 6 Axes Integrated Drive Module) . . . . . 4-40
Table 4-20 Type Symbol of the Small-Sized 6 Axes Integrated Drive Module . . . . . 4-41
Table 4-21 Specification of the Small-Sized 6 Axes Integrated Drive Module . . . . . 4-41
Table 4-22 Symbols of the IPM of the small-sized 6 axes drive module . . . . . 4-42
Table 4-23 Symbols of the Hall Sensors of the small-sized 6 axes drive module . . . . . 4-42
Table 4-24 Description of the Connectors of BD653 . . . . . 4-44
Table 4-25 Description of the LEDs of BD653 . . . . . 4-44
Table 4-26 Description of the Connectors of BD654 . . . . . 4-46
Table 4-27 Description of the LEDs of BD654 . . . . . 4-46
Table 4-28 Type Symbol of the Optional Drive Module . . . . . 4-47
Table 4-29 Symbols of the IPM of the Optional Drive Module . . . . . 4-47
Table 4-30 Symbols of the Hall Sensors of the Optional Drive Module . . . . . 4-48
Table 4-31 Configuration of H6D1X . . . . . 4-50
Table 4-32 Description of the Connectors of H6D1X . . . . . 4-50
Table 4-33 Configuration of H6D1Z . . . . . 4-52

Table 4-34 Description of the Connectors of H6D1Z . . . . . 4-52
Table 4-35 Types and Usage of the Fuses of the Electronic Module . . . . . 4-54
Table 4-36 Type and Function of BD6C3 Connector . . . . . 4-55
Table 4-37 Types and Functions of BD6C3 LEDs . . . . . 4-58
Table 5-1 Summary of Optional Configurations . . . . . 5-2
Table 5-2 Part Names of PCI Communication Cards . . . . . 5-3
Table 5-3 Description of the Exterior of the PCI Communication Card . . . . . 5-4
Table 5-4 Configuration of the Front Part of the PCI Communication Card, and the Description of the Functions . . . . . 5-5
Table 5-5 Usage of the Switches of the Brake Release Unit . . . . . 5-7
Table 5-6 Types and Usage of the Connectors of the Brake Release Unit . . . . . 5-9
Table 5-7 Usage and Operation of the LEDs for the Status of the Brake Release Unit . . . . . 5-10
Table 5-8 Communication Module (of Crevis) . . . . . 5-12
Table 5-9 IO Module (of Crevis) . . . . . 5-12
Table 5-10 Relay Module (of Crevis) . . . . . 5-13
Table 5-11 Analogue IO Module (of Crevis) . . . . . 5-13
Table 5-12 Pulse Measuring Module (of Crevis) . . . . . 5-13
Table 5-13 Serial Communication Module (of Crevis) . . . . . 5-13
Table 5-14 Connector Name, Function, and External Connection Device of Optional Safety IO Module (BD680) . . . . . 5-15
Table 5-15 Display Device Description of Optional Safety IO Module (BD680) . . . . . 5-16
Table 5-16 Front Display Description of Optional Safety IO Module (BD680) . . . . . 5-17
Table 5-17 SW1 Setting Device Description of Optional Safety IO Module (BD680) . . . . . 5-18
Table 5-18 Board Specifications . . . . . 5-24
Table 6-1 Daily Inspection . . . . . 6-4
Table 6-2 First Inspection . . . . . 6-5
Table 6-3 Cyclic Inspections . . . . . 6-6
Table 6-4 Inspection of Maintenance Parts of the Category A . . . . . 6-9
Table 6-5 Maintenance Parts of the Category A-1 (Spare Parts for Standard Parts) . . . . . 6-9
Table 6-6 Maintenance Parts of the Category A-2 (Important Backup Parts) . . . . . 6-10
Table 6-7 Maintenance Parts of the Category A-3 (Periodic Replacement Parts) . . . . . 6-10
Table 6-8 Maintenance Parts of the Category B . . . . . 6-11
Table 6-9 Maintenance Parts of the Category B-1 (Parts that should be purchased from Hyundai Robotics) . . . . . 6-11
Table 6-10 Table 6 10 Maintenance Parts of the Category B-2 (Parts that can be purchased directly from the parts maker) . . . . . 6-11

## Overview

The main purpose of this chapter is to describe the matters about the safety for the users of the industrial robot and for the workers who maintain and operate the robot.
Every worker who installs, replaces, adjusts, operate, preserves and maintains the robot system must carefully read and fully understand the operation manual and maintenance manual. Also, keep the manuals nearby so that you can view it whenever necessary.

Our company plans and implements the preservation, maintenance and operation trainings so the person using the robot should ensure that the workers working in the robot system should receive the relevant trainings. It must be ensured that only those who have completed this course can handle the robot.

The users of our industrial robots are responsible for surely understanding and complying with safety-related laws applicable in concerned countries and for properly designing, installing, and operating safety devices to protect workers working in robot systems.
The dangerous areas of the robot system, in other words, the areas where the robot, tools and peripheral devices are operating, should be equipped with safety devices according to ANSI / RIA R15.06-2012 to prevent an object, other than the workers and the workpiece, from entering the dangerous areas. The robot system should be configured in a way that it can be stopped immediately by an emergency stop device when a worker or object needs to enter the dangerous area in spite of possible danger. The workers are responsible for installing, checking and operating these safety devices.

This manual has been created based on standard specifications, so some contents may differ depending on the options and model of the product that you have purchased. In addition, the contents and specifications of this manual are subject to change without prior notice to improve the performance of the product, and Hyundai Robotics is not responsible for situations that could be caused by inaccuracies or typos in the manual. For detailed information on the revision of the manual, you need to visit our internet website (www.hyundai-robotics.com).

## Copyrights

The contents covered in this manual are protected by copyright laws and confidentiality agreements. This manual may be provided as reference material for customers who have purchased Hyundai Robotics products or may be used as internal training material. Any activities, such as use, copying, disclosure, or distribution to third parties that are not expressly permitted by Hyundai Robotics, are strictly prohibited.

Copyright © 2025 HYUNDAI ROBOTICS. All rights reserved.

## Safety Cautions

Before using the product, you must fully understand the following safety cautions for proper use, user safety, and prevention of property damage

### ■ Danger

| | |
|---|---|
| ⚠ Danger | Imminent danger: Incompliance may cause the death of or serious injuries to the worker. |

- Make sure that the safety circuit is never ignored, modified or altered in any way.
- Considering that additional problems may occur due to gravity or brake release, you must take a measure, before carrying out works, such as using a rope and crane that are to be used for transport of individual robots to prevent the brake from running down or additional accidents from taking place during the release of the brake.

### ■ Warning

| | |
|---|---|
| ⚠ Warning | Potential danger: Incompliance may cause injuries to the worker or damage to property, such as significant damage to the product. |

- Any act of damaging the safety labels, such as relocating the name plates, warning markings, safety symbols, name markings and wire markings or painting over them or blocking them with a cover is prohibited.
- When the robot is operating, there is a risk of collision between the robot and the worker. Therefore, install a safety fence to prevent the worker from getting close to the robot.
- The robot should be installed and operated according to the guidelines of ISO 10218-2. In addition, it is required to comply with the relevant requirements of international standards and national laws. Our company (or the manufacturer) will not be responsible for any accidents that occur due to not complying with the relevant requirements of international standards and national laws or due to not reviewing the “risk assessment”.
- Must observe the safety work procedures to prevent safety accidents. Do not change or ignore safety devices or circuits under any circumstances, and pay attention to possible electric shock. In auto mode, all normal works should be performed outside the safety guard. Before carrying out works, make sure that there are no people in the operation area of the robot.
- Sufficiently check under your feet when teaching. In particular, you must perform the teaching work outside the safety guard when teaching at a high speed (250mm/s or above).
- When it comes to changing of components or addition of optional equipment (both hardware and software) to the robot both of which may affect safety-related functions, you must check whether the functions are in normal conditions, by paying attention to the items described in “1.11 Safety Works When Operating the Robot”.
- When installing and operating an end effector, you must perform application, maintenance and operation according to ISO/TR 20218-1:2018.

- When transporting the product by using lifting equipment, you should comply with the relevant national and local safety regulations and equipment usage guidelines. When moving the product using a crane, you must make sure that that no workers are under the product. Also, never work or walk under a crane or the product.
- If a general safety guard is to be installed and used, the robot should be operated after confirming that the emergency stop operates normally. Also, check if the emergency stop input is disabled. This is an essential measure that must be taken in advance for the safety of workers.
- If an automatic safety guard is to be installed and used, the robot should be operated after confirming that the emergency stop operates normally. Also, check if the emergency stop input is disabled. This is an essential measure that must be taken in advance for the safety of workers.
- If a safety input is to be installed and used, the robot should be operated after confirming that the input function operates normally. This is an essential measure that must be taken in advance for the safety of workers.
- The robot should be installed and operated according to the guidelines of ISO 10218-2. In addition, it is required to comply with the relevant requirements of international standards and national laws.

  Our company (or the manufacturer) will not be responsible for any accidents that occur due to not complying with the relevant requirements of international standards and national laws or due to not following the above "caution".
- If a safety-related input is installed and enabled, you must check whether the function operates normally by referring to "1.11 Safety Measures When Operating the Robot".
- If an emergency stop output is to be installed and used, the robot should be operated after confirming that the emergency stop output operates normally. This is an essential measure that must be taken in advance for the safety of workers.

## ■ Caution

| | |
|---|---|
| ⚠ Caution | Low-level danger factor: Incompliance may result in minor injury to the worker or damage to property, such as damage to the product. |

- Mark the installation and dangerous areas of the robot in a way that they can be clearly differentiated from other facilities and devices in terms of type, color and style.
- As the emergency stop function immediately cuts off the motor power, so reckless use of the function may result in accumulation of fatigue that affects the durability of the robot. The function must be used only in emergency situations.
- Our company is not responsible if the jogging operation does not work due to the failure of the hardware limit switch. You must check it periodically. For the measure to take in case of a failure, please refer to the troubleshooting manual.
- You should not be negligent in paying attention to sudden movements while entry is made possible. Under any circumstances, you must avoid approaching the robot without preparing for possible emergency situation.

- In the case of trial-operation, there may be a design error, teaching error, or defect in manufacturing with regard to the entire system including the teaching program, jigs, and sequencing. For this reason, you should work with elevated safety awareness in trial-operation. Multiple factors can contribute to safety accidents. Observe the following measures considering that safety is very important when trial-operating the robot.
- During maintenance and inspection of the manipulator, the robot arm may fall, or there could be a different type of danger. So, you must proceed with the work according to the instructed procedures
- When moving the axis of the robot that has no driving force applied, there is a risk of the axis dropping due to gravity and also an additional risk due to the release of the brake system. So, you must proceed with the work according to the instructed procedures.
- Before turning on the power, check that there is no worker inside the robot operation area and you are in a safe place.
- Before installing the product, you must perform a sufficient risk assessment and then set the safety functions based on the assessment results. For details on safety functions, refer to “1. Safety” section.
- When installing and repairing the product, contact the customer support team and ask an expert.
- Do not install and use the product in an area that has lots of dust or is dirty. Dust or foreign substances may cause product failure or performance problems.
- Mark the installation and dangerous areas of the robot in a way that they can be clearly differentiated from other facilities and devices in terms of type, color and style.
- If the product is not installed in the recommended locations, the performance and service life of the product may be reduced. Install and use the product according to the recommendations.
- 1. Before connecting the cables, turn “off” the controller's main power switch and then lock it by using a padlock.

  2. The controller has DC400V charged energy. Be careful. Wait at least 5 minutes after turning “off” the power switch, and then wait 5 minutes at least to discharge the charged energy.

  3. When handling the PCB, take precautions not to allow static electricity to damage it

  4. Wiring and connection of wires must be performed by qualified personnel.
- Since the contact part of the connector for each robot may be different from the figure above, you must read the relevant robot maintenance manual carefully before connecting the wire harness.
- 1. When performing the wiring work for the controller and manipulator, separate the signal line and the power line. In addition, use a separate duct for the high power line and the signal line respectively.

  2. Use a protective cover for the wiring, as a measure to prevent the wiring from getting damaged when people are passing nearby.

3. Before supplying the primary power, you must check again the relationship with regard to connection, the power specification and power supply specification of the controller.

- The person in charge of maintenance should work after understanding the placement of various devices and parts and their functions inside the controller.
- The DIP switch is set to OFF mode when shipped from the factory, and the setting should not be changed arbitrarily by the user.
- The user cannot change the following items arbitrarily, and needs to refer to them only when required to reprogram through FPGA JTAG.
- The drive module differs depending on the type of the robot, so you must check the type when replacing it.
- 1. Do not release more than two axes at the same time.
- 2. Must keep a safe distance from the robot first before using the brake release unit.
- 3. Use the brake release unit after preparing for the dropping of the robot's axis by using equipment such as a crane.

  4. Check the safety matters while working in a group of at least 2 people.
- When using the brake release unit, follow the procedures below.

  1. Turn off the AC220V power switch and check that the DC24V power switch is turned off.

  2. Connect the AC power cable to the AC power connector.

  3. Turn on the AC220V power switch.

  4. Turn on the DC24V power switch.

  - When the use of the brake release unit is finished, follow the procedures below.

  1. Turn off the DC24V power switch.

  2. Turn off the AC220V power switch.

  3. Disconnect the AC power cable.

  - Do not use AC220V power and DC24V battery power at the same time.
- Fieldbus communication must be available to use commercial remote IO. Therefore, you should configure the PCI communication card together by referring to the Paragraph 5.1 mentioned above.
- The drive unit differs depending on the type of the robot, so you must check the type when replacing the drive unit.
- When transporting the product, you should maintain a proper posture and work in a group of at least two workers. Otherwise, injury to parts of the body such as the back, arms and legs may result.
- If you transport the product by using lifting equipment, you should comply with relevant national and local safety regulations and equipment usage guidelines.

- When transporting the product, you should fully understand the transport-related contents in the manual and follow the instructions. Our company will not be responsible for any damage to or breaking of the product due to the customer's transport of the product.
- These are important parts to be prepared for daily maintenance and inspection.
- These are maintenance parts to be prepared when multiple units are purchased.

# 1

# Safety

## 1.1. Applicable Standards

The safety standards applied to the product are as follows.

- ANSI/RIA/ISO 10218-1:2011 Robots and robotic devices - Safety requirements for industrial robots - Part 1: Robots
- ANSI/RIA R15.06-2012 - Industrial Robots and Robot Systems - Safety Requirements
- ISO 10218-2:2011 Robots and robotic devices - Safety requirements for industrial robots - Part 2: Robot systems and integration
- IEC 61508-1:2010 Functional safety of electrical/electronic/programmable electronic safety-related systems - Part 1: General requirements
- IEC 61508-2:2010 Functional safety of electrical/electronic/programmable electronic safety-related systems - Part 2: Requirements for electrical/electronic/programmable electronic safety-related systems
- IEC 61508-3:2010 Functional safety of electrical/electronic/programmable electronic safety-related systems - Part 3: Software requirements
- IEC 61508-4:2010 Functional safety of electrical/electronic/programmable electronic safety-related systems - Part 4: Definitions and abbreviations
- IEC 61508-5:2010 Functional safety of electrical/electronic/programmable electronic safety-related systems - Part 5: Examples of methods for the determination of safety integrity levels
- IEC 61508-6:2010 Functional safety of electrical/electronic/programmable electronic safety-related systems - Part 6: Guidelines on the application of IEC 61508-2 and IEC 61508-3
- IEC 61508-7:2010 Functional safety of electrical/electronic/programmable electronic safety-related systems - Part 7: Overview of techniques and measures
- IEC 61800-5-1:2007/A1:2017 Adjustable speed electrical power drive systems - Part 5-1: Safety requirements - Electrical, thermal and energy
- IEC 61800-5-2:2015 Adjustable speed electrical power drive systems - Part 2: General requirements - Rating specifications for low voltage adjustable speed a.c. power drive systems
- ISO 13849-1:2015 Safety of machinery - Safety-related parts of control systems - Part 1: General principles for design
- ISO 13849-2:2012 Safety of machinery - Safety-related parts of control systems - Part 2: Validation
- IEC 62061:2005/A2:2015 Safety of machinery. Functional safety of safety-related electrical, electronic and programmable electronic control systems
- IEC 61800-3:2017 Adjustable speed electrical power drive systems - Part 3: EMC requirements and specific test methods

- IEC 61000-6-7:2014 Electromagnetic compatibility (EMC) - Part 6-7: Generic standards - Immunity requirements for equipment intended to perform functions in a safety-related system (functional safety) in industrial locations
- IEC 61326-3-1:2017 Electrical equipment for measurement, control and laboratory use. EMC requirements. Part 3-1: Immunity requirements for safety-related systems and for equipment intended to perform safety-related functions (functional safety) - General industrial applications
- IEC 60204-1:2016 Safety of machinery - Electrical equipment of machines - Part 1: General requirements
- ISO 11161:2007 Safety of machinery - Integrated manufacturing systems - Basic requirements

## 1.2. Safety Performance

The performance of the industrial robot's safety modules is as follows.

Table 1-1 Safety Performance of Safety Modules

The safety performance of SafeSpace2.0's emergency stop and external device interface (basic safety input/output, PROFIsafe) is as follows:

| Item | Safety performance | Applicable standards |
|---|---|---|
| HFT | 1 | IEC 61508/62061/61800-5-2 |
| SIL (Safety Integrity Level) | 3 | IEC 61508/62061/61800-5-2 |
| Category | 4 | ISO 13849-1 |
| PL (Performance Level) | e | ISO 13849-1 |
| PFH | 1.34217E-08 | ISO 13849-1 |

The safety performance of other safety functions is as follows:

| Item | Safety performance | Applicable standards |
|---|---|---|
| HFT | 1 | IEC 61508/62061/61800-5-2 |
| SIL (Safety Integrity Level) | 2 | |
| Category | 3 | ISO 13849-1 |
| PL (Performance Level) | d | |

## 1.3. Safety Trainings

In order to use the functions of the product effectively, you must fully understand the contents of the manual and then install, use and maintain the product properly. The users of the product are responsible for fully understanding and complying with robot-related safety laws in the area where the robot is installed and used, and also responsible for properly designing, installing, and operating safety devices to ensure the safety of users working in the robot system.

- All the workers who install, use, and maintain the robot system must read the manual carefully and understand the contents completely. In particular, they must fully understand the safety cautions (⚠).
- Our company plans and implements the trainings for the installation, use and maintenance of the product. So, the product users and the workers must complete relevant training courses before using the product.

- The workers responsible for teaching and inspecting the robot must complete the robot use and safety trainings before using the robot. The contents covered in the safety training courses include the following items.
  - The concept of safety. and the purpose and function of the safety devices
  - Procedures for safe handling of the robot
  - Performance and potential danger of the robot and robotic system
  - Items including the works related to specific applications of the robot

## 1.4. Risk Assessment

When it comes to configuring an integrated system including a robot, risk assessment is one of the most critical factors that are handled as legal requirements in most countries. A risk assessment of an integrated system cannot be performed only on a single robot because the safety assessment for the installation of the will differ depending on how the robot is integrated into the system.

The system administrator should configure and operate the system according to the guidelines of ISO 12100 and ISO 10218-2 to conduct a risk assessment.

You should conduct the risk assessment by taking into account the entire process of an integrated system including the robot. The main objectives of the risk assessment are as follows.

- Basic settings for the use of the robot, and teaching of the robot
- Trouble diagnosis, and maintenance
- Normal operation of the installed robot

After installing the robot and configuring the system, you must conduct a risk assessment. The risk assessment mainly determines the appropriateness of safety devices in the robot integrated system, as well as the necessity for additional emergency stop devices and other safety devices. It is very important to know the appropriate safety devices and properly configure the robot integrated system. You should configure the integrated system by referring to the relevant information in the manual. For details on configuring the safety functions, refer to “1.8. Safety Functions”. In addition, when installing the robot in a specific location or configuring safety-related functions by using the safety I/O, the important items in the risk assessment of an integrated robot system are as follows.

- Severity
- Frequency of exposure to risks
- Possible occurrence
- Possible avoidance

In the process of configuring an integrated system, if the safety-related functions of the robot do not sufficiently eliminate the risk factors, it is possible to check the necessity for additional protective devices during the risk assessment.

## 1.5. Potential Risks

If the results of the risk assessment of an integrated system linked to the robot reveal that the risk factors have not been sufficiently removed only with the safety-related functions of the robot, additional protective measures must be taken.

The items to take into consideration when establishing additional protective measures is as follows.

- During installation, fingers can be pinched (caught) between the robot base and the mounting table.
- Injuries (puncture wound, penetrating injury, etc.) from sharp edges or pointed parts of obstacles or tools in the operation area.
- Injuries (bruise, falling over, fracture, etc.) due to collision with the robot
- Injuries caused (puncture wound, penetrating injury, fracture, etc.) due to obstacles around the robot
- Injuries that may occur because the fastening part is not completely fixed
- Injuries (skin damage, shortness of breath, etc.) that may occur when working with toxic and hazardous substances
- Separation of a workpiece from the tool due to sudden power failure
- A mistake caused by confusing with the emergency stop switch of other equipment
- Errors due to arbitrary change of the setting of safety-related functions.

The type of risk that may occur depends on the system configuration, so you must conduct the risk assessment before using the integrated system.

## 1.6. Effectiveness and Responsibility

It is required to observe the safety requirements according to the safety regulations and laws of the countries and regions where the robot is installed and used. Suppliers and users of the robot integrated systems have a variety of responsibilities, including the following items.

- Risk assessment of the robot integrated system
- Addition and removal of safety devices according to the risk assessment results
- Check whether the integrated system is configured, installed and set up correctly.
- Establishment of the methods and guidelines to use the integrated system, and trainings for the users
- Management of safety devices (Prohibition of user's arbitrary change and manipulation of safety devices)
- Provision of important information, as well as contact information, related to the use and safety of the product
- Provision of all kinds of technical documents including manuals

The safety information in this manual does not cover all risk factors and situations that may arise while using the product.

## 1.7. Safety Labels

Name plates, warning markings, safety symbols, etc. are attached on the inside and outside of the controller. Any act of damaging the safety labels, such as relocating the name plates, warning markings, safety symbols, name markings and wire markings or painting over them or blocking them with a cover is prohibited. **Mark the installation and dangerous areas of the robot in a way that they can be differentiated from other facilities and devices in terms of type, color and style.**

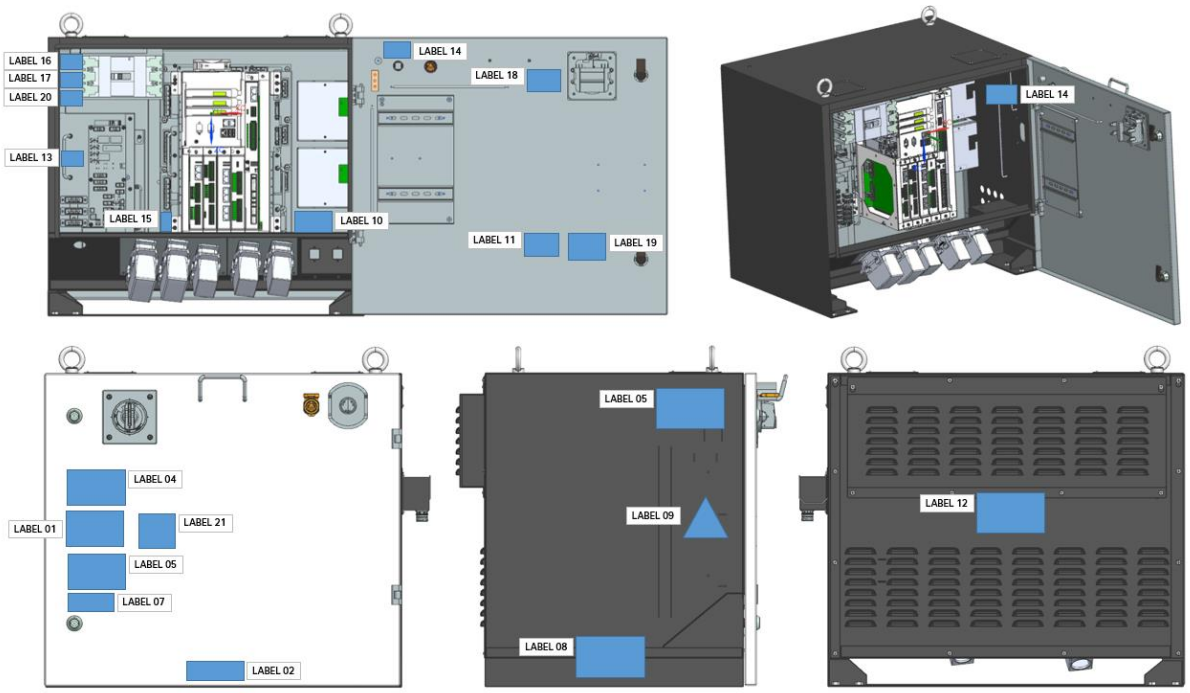


Figure 1.1 Safety Lables

Table 1-2 Safety Labels

| No. | Item | Korean | English |
|---|---|---|---|
| 1 | Name plate | - | 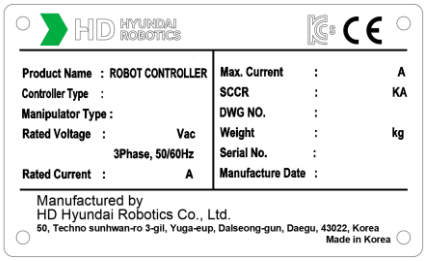 |
| 2 | NRTL certification mark | TÜV NRTL C US | TÜV NRTL C US |
| 3 | Warning for high voltage | 경 고<br>고전압<br>- 고전압에 의해 중대한 인명사고가 일어날 수 있으므로 다음을 준수해 주십시오.<br>- 제어기 문을 열 때는 반드시 전원을 OFF해 주십시오.<br>- 수리시에는 전원을 OFF한 후 자물쇠를 이용하여 전원스위치를 OFF로 잠가주십시오. | WARNING<br>High Voltage<br>- High voltage can cause injury or death.<br>- Control cabinet must be turned to "OFF" before opening cabinet door.<br>- The Robot System must be switched off before any maintenance, exchange, repair.<br>- Padlock must be used to lock the power switch to "OFF" . |
| 4 | Caution for installation | 주 의<br>- 설치작업 전에 조작설명서 및 안전지침서를 주의깊게 읽어주십시오.<br>- 조작 중에는 로봇 작업영역 내로 들어가지 마십시오.<br>- 케이블을 연결하기 전에 로봇 본체와 제어기의 일련번호가 동일한지 확인하여 주십시오. 일련번호가 다를 경우, 비정상적인 동작을 일으킬 수 있습니다. | CAUTION<br>- Carefully read the operation manual and the safety manual before installation and using application.<br>- Do not enter the working range of the Robot system under operation.<br>- Before cables connecting, check that the S/N is identical on the controller and on the manipulator.<br>- If the S/N is different, robot may be operated abnormally. |
| 5 | Marking for high voltage, and the voltage | AC220 VOLTS<br>Change to 380V | AC220 VOLTS<br>Change to 380V |
| 6 | Caution for air vent | 주 의<br>공기 순환용 흡/배기구를 막지 마십시오.<br>제어기에 심각한 손상을 입힐 수 있습니다. | CAUTION<br>Ensure no interference for air circulation of ventiduct.<br>Interference may cause controller damage. |

| | |
|---|---|
| ⚠ Warning | Any act of damaging the safety labels, such as relocating the name plates, warning markings, safety symbols, name markings and wire markings or painting over them or blocking them with a cover is prohibited. |

| | |
|---|---|
| ⚠ Caution | Mark the installation and dangerous areas of the robot in a way that they can be differentiated from other facilities and devices in terms of type, color and style. |

## 1.8. Safety Functions

The safety system of the robot is designed in dual configuration (HFT=1) to satisfy the safety performance (PL) = d Cat3 of [ISO13849-1:2015] and the safety integrity level (SIL) 2 of [IEC62061:2005], and continuously monitors the status of safety related devices. When an error is detected by self-diagnosis, or a safety related signal is inputted, the safety functions will stop the robot according to the classification of stop situations determined based on the risk assessment. Also, when any of the dual switches of the safety circuit is activated, the motor drive power and brake drive power will be cut off by the sfety functions to secure a safe state. Information on the relevant status can be checked through the Teach Pendant.

| | |
|---|---|
| ⚠ Danger | Make sure that the safety circuit is never ignored, modified or altered in any way. |

The safety-related main functions of the robot are as follows.

### 1.8.1. Main Safety Functions

- Emergency stop (IEC 60204-1,10,7)

There is one emergency stop button on the controller and teach pendant respectively. It is possible to connect, if necessary, an additional emergency button to the safety chain circuit of the robot. The emergency stop function is to be applied with higher priority over all other control functions of the robot. The function will immediately cut off the power supply to the motors of individual axes of the robot, stopping the robot and making it impossible to use safety related funtions controlled by the robot.

| | |
|---|---|
| ⚠ Caution | As the emergency stop function immediately cuts off the motor power, so reckless use of the function may result in accumulation of fatigue that affects the durability of the robot. The functoin must be used only in emergency situations. |

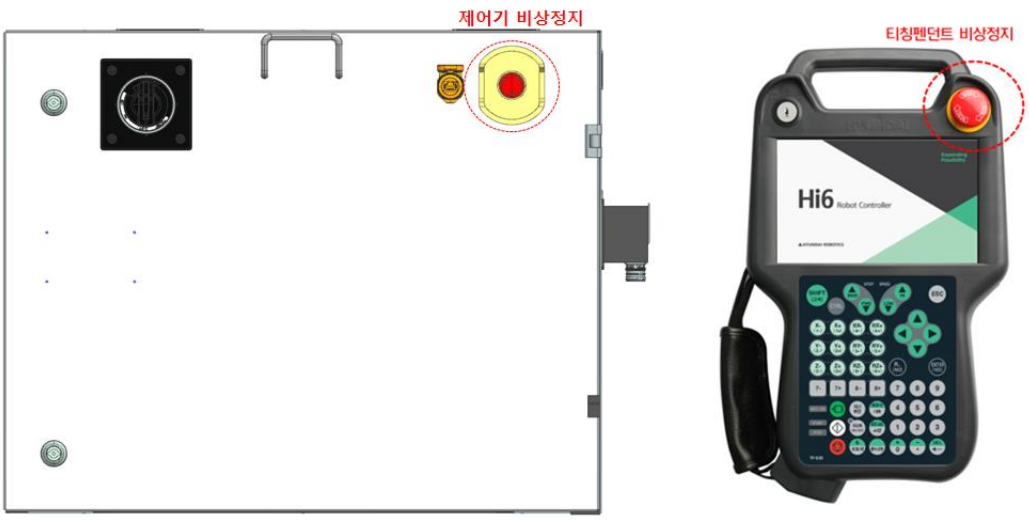


Figure 1.2 Emergency Stop Buttons on the Controller and Teach Pendant

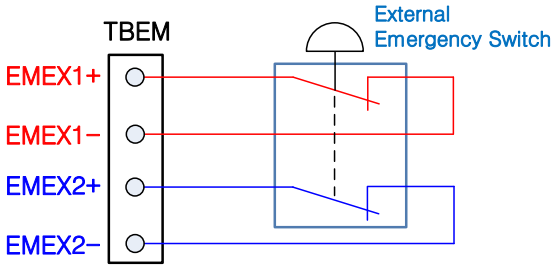

Figure 1.3 Connection of the Additional Emergency Stop Device

- Protective stop (ISO 10218-1:2011)

The robot should have multiple safety inputs so that it can be used in connection with external safety devices such as safety guards, safety pads, and safety lamps. These safety inputs will make the robot stop when there is an input from the robot itself and peripheral facilities, securing a safe state. For details on the connection to the safety inputs, refer to “4.3.2. Safety Module (BD632)”.

- Speed limit (EN ISO 10218-1:2011)

In manual operation mode, the speed of the robot is limited to a maximum of 250 mm / s. The speed limit applies not only to the TCP (Tool Center Point) but also to all other parts of the robot that are to be operated in manual mode. It should be also made possible to monitor the speed of the equipment mounted on the robot.

- Operaiton area limit (ANSI/RIA R15.06-2012)

When applying a robot, in order to secure a sufficient safety area, the operation range of the robot can be limited by using a hardware limit or a stopper. This function can minimize the damage if the robot collides with an external safety device such as a safety guard. Axis 1, 2, and 3 are mainly limited by a stopper or hardware limit. If the operation range is changed due to a mechanical stopper or hardware limit, the operation range limit parameter should be also changed in software as well. Please refer to the operation manual about the change. The operation area limit of each axis can be changed by the user, and at the time of shipment, it is set to the maximum operation range of the robot. The safety system of the Hi7 controller can support up to 4 hardware limit switches as an option. Refer to “4.3.2. Please refer to “Safety Module (BD632)” for the matters related to the connection.

- Operaiton mode selection (ANSI/RIA R15.06-2012)

You can operate the robot in manual, automatic or remote mode. The maximum speed in manual mode is limited to 250 mm/s, and you can perform operation only with the Teach Pendant. In addition, it is possible to mount a mode switch additionally on the control panel by configuring it as an option. For details on the operation, please refer to the operation manual.

### 1.8.2. Other Related Functions

Required to fully understand the following items and take actions if a person is pinched due to an accident caused by the arm of the robot.

- Release of the manual brake

| | |
|---|---|
| ⚠ Danger | Considering that additional problems may occur due to gravity or brake release, you must take a measure, before carrying out works, such as using a rope and crane that are to used for transporation of individual robots to prevent the brake from running down or additional accidents from taking place during the release of the brake. |

- ■ After removing power from the controller, connect the brake release unit to the designated connector of the robot or the internal board connector of the controller and then release the manual brake for each axis as needed.
- ■ Refer to the maintenance manual of each robot for the information on individual axes of each robot, and for the designated transport equipment (eg, rope, crane) for each robot.

When the robot is stopped by the limit switch, it is possible to change the position by jogging the robot with the Teach Pendant in the constant setting mode. After designating the soft limit according to the site situation, make sure that it is installed by a trained worker.

| | |
|---|---|
| ⚠ Caution | Our company is not responsible if the jogging operation does not work due to the failure of the hardware limit switch.<br>You must check it periodically. For the measure to take in case of a failure, please refer to the troubleshooting manual. |

## 1.9. Stop

The safety system of Hi7 controller can handle the stop operation as shown below. Safety inputs can be classified as follows according to the stop classification criteria specified in IEC 60204-1.

- Stop classification Stopping (uncontrolled stoping) occurs as the power to the machine actuator is immediately removed.

  ➔ Emergency stop button

- Stop classification 1: Controlled stop in which the machine actuator still has a power that can be used to achieve the stopping. The power will be removd when the stopping is achieved.

  ➔ Safety inputs except for the emergency stop button

# 1.10. Safety Measures When Installing

## 1.10.1. Installing the Safety Guard

| | |
|---|---|
| ⚠ Warning | When the robot is operating, there is a risk of collision between the robot and the worker. Therefore, install a safety fence to prevent a worker from getting close to the robot. |

When the robot is operating, there is a risk of collision between the robot and the worker. Therefore, install a safety fence to prevent a worker from getting close to the robot according to ISO 13855:2010. Configure the system to ensure that the robot stops when a worker opens the door of the safety fence and approaches the facility, during the robot operation, for any reason, such as inspecting the robot or a welding fixure, performing tip dressing or tip changing, etc.

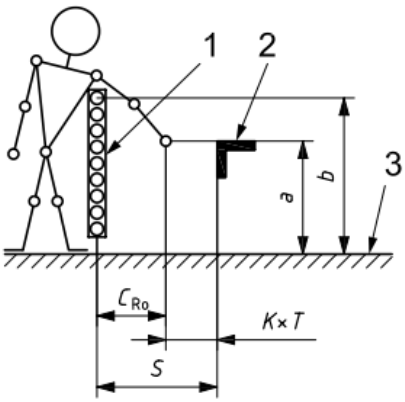


**Key**

1 electro-sensitive protective equipment

2 hazard zone

3 reference plane

$a$ height of the hazard zone

$b$ height of the upper edge of the detection zone of electro-sensitive protective equipment

$C_{RO}$ additional distance which a part of the body can be moving towards the hazard zone prior to the actuation of the safeguard (see values in Table 1)

$S$ minimum distance for reaching over

Figure 1.4 Connection of the Safety Fence

Source: ISO 13855:2010 Safety of machinery — Positioning of safeguards with respect to the approach speeds of parts of the human body

Table 1-3 Installation Standards of the Safety Fence

| Height of hazard zone *a* | Height of upper edge of the detection zone of the electro-sensitive protective equipment *b* | | | | | | | | | | | |
|---|---|---|---|---|---|---|---|---|---|---|---|---|
| | 900 | 1 000 | 1 100 | 1 200 | 1 300 | 1 400 | 1 600 | 1 800 | 2 000 | 2 200 | 2 400 | 2 600 |
| | Additional distance to hazard zone $C_{RO}$ | | | | | | | | | | | |
| **2 600**[a] | 0 | 0 | 0 | 0 | 0 | 0 | 0 | 0 | 0 | 0 | 0 | 0 |
| **2 500** | 400 | 400 | 350 | 300 | 300 | 300 | 300 | 300 | 250 | 150 | 100 | 0 |
| **2 400** | 550 | 550 | 550 | 500 | 450 | 450 | 400 | 400 | 300 | 250 | 100 | 0 |
| **2 200** | 800 | 750 | 750 | 700 | 650 | 650 | 600 | 550 | 400 | 250 | 0 | 0 |
| **2 000** | 950 | 950 | 850 | 850 | 800 | 750 | 700 | 550 | 400 | 0 | 0 | 0 |
| **1 800** | 1 100 | 1 100 | 950 | 950 | 850 | 800 | 750 | 550 | 0 | 0 | 0 | 0 |
| **1 600** | 1 150 | 1 150 | 1 100 | 1 000 | 900 | 850 | 750 | 450 | 0 | 0 | 0 | 0 |
| **1 400** | 1 200 | 1 200 | 1 100 | 1 000 | 900 | 850 | 650 | 0 | 0 | 0 | 0 | 0 |
| **1 200** | 1 200 | 1 200 | 1 100 | 1 000 | 850 | 800 | 0 | 0 | 0 | 0 | 0 | 0 |
| **1 000** | 1 200 | 1 150 | 1 050 | 950 | 750 | 700 | 0 | 0 | 0 | 0 | 0 | 0 |
| **800** | 1 150 | 1 050 | 950 | 800 | 500 | 450 | 0 | 0 | 0 | 0 | 0 | 0 |
| **600** | 1 050 | 950 | 750 | 550 | 0 | 0 | 0 | 0 | 0 | 0 | 0 | 0 |
| **400** | 900 | 700 | 0 | 0 | 0 | 0 | 0 | 0 | 0 | 0 | 0 | 0 |
| **200** | 600 | 0 | 0 | 0 | 0 | 0 | 0 | 0 | 0 | 0 | 0 | 0 |
| **0** | 0 | 0 | 0 | 0 | 0 | 0 | 0 | 0 | 0 | 0 | 0 | 0 |

When a value of zero is given, the calculation of the minimum distance, *S*, should be made in accordance with 6.2 to 6.4.

NOTE 1 Electro-sensitive protective equipment with a height of the

— upper edge of the detection zone below 900 mm is not included since they do not offer sufficient protection against circumventing or stepping over

— lower edge of the detection zone above 300 mm in relation to the reference plane does not offer sufficient protection against crawling below.

NOTE 2 The data for this table were researched at a study of the German BG, see [22].

NOTE 3 Most values given in Table 1 are lower in relation to the values of ISO 13857:2008, Tables 1 and 2, since parts of the body cannot support themselves on safeguards in case of reaching over.

[a] Approach to the hazard zone by reaching over is impossible.

Source: ISO 13855:2010 Safety of machinery - Positioning of safeguards with respect to the approach speeds of parts of the human body

- The safety fence should cover the operation area of the robot, and should secure enough space so that there is no interference when the worker carries out works, such as teaching, maintenance, etc. The safety fence should be made solid to prevent it frome being moved easily and should be structured in a way not to allow people to enter inside the fence by going over the safety fence.
- In principle, it is required to install and use a fixed type safety fence that does not have dangerous parts such as uneven or sharp parts.
- An entrance door should be installed to allow people to enter inside the safety fence, and a safety plug must be installed on the door in a way that the door should not open unless the plug is removed. In addition, wiring should be configured in a way that allows the motor to be turned off and the brake to be in hold state when the safety plug is removed or the sfety fence is opened.

- If you want to operate the robot even when the safety plug is removed, wiring should be configured in a way that allows the robot to play back at low speed.
- Install the emergency stop button of the robot at a location where the operator can quickly press it.
- If a safety fence is not to be installed, safety devices such as photoelectric switches and mat switches should be installed covering the entire area that falls within the specification of the safety guard range of the robot, as substitute devices for the safety fence, making it possile for the robot to stop automatically when a person enters inside the safety fence.
- Make sure that the robot's operation area (danger area) can be identified in some way, such as painting the floor.

### 1.10.2. Placement of the Robot and Peripheral Devices

| | |
|---|---|
| ⚠ Warning | The robot should be installed and operated according to the guidelines of ISO 10218-2. In addition, it is required to comply with the relevant requirements of international standards and national laws.<br>Our company (or the manufacturer) will not be responsible for any accidents that occur due to not complying with the relevant requirements of international standards and national laws or due to not reviewing the "**risk assessment**". |

Installation of the product should be performed by a qualified installer according to relevant national and local regulations and laws.

- When unpacking the product, check it for damage that may occur while transporting or unpacka it.
- Before installing the product after unpacking it, you must check the safety regulations, instructions, information related to the product installation and use environments, and fully undertand the installation methods.
- When connecting the primary power of the controller or peripheral device, peroform the connection after checking first whether the supply side power is turned off. Since high voltage is used as the primary power source, there is a risk of electric shock.
- Put up a sign "No entry during operation" at the entrance of the safety fence, and inform the workers of the intents.
- Place the controller, interlock panels, and other control panels in a way that they can be operated from outside the safety fence.
- When installing the operation stand, attach an emergency stop button to it also. Wherever you operate the robot, you should be able to stop the robot in an emergency situation.
- Do not allow the wiring or piping of the manipulator, controller, interlock panel, timer, etc. to get caught on by the workers' feet or to get stepped on directly by the forklift. Otherwise, there is a risk of accidents of the worker getting electric shock or the wires getting disconnected.

- Place the controller, interlock panel, and operation stand at a place where the operation of the manipulator can be seen sufficiently. If the robot is operating abnormally in an area from which the robot operation cannot be seen, or the worker is working on something in the area, there is a risk of major accidents taking place during operation.
- If the required robot operation area is narrower than the allowable robot operation area, you should limit the robot operation area. It can be limited by soft limit, hardware limit, mechanical stopper, etc. Even when the robot operates off the normal operation area due to abnormal operation such as mistakes in the operation of the robot, the robot will be stopped in advance by the operation area limit function.
- During welding, spatter may fall on or fall near the worker and cause a burn or fire. Install a light shield plate, cover, etc. in the range where the movement of the manipulator can be seen sufficiently.
- When it comes to a device that shows the auto and manual operation modes of the robot, an easily visible device should be installed to ensure that the status can be recognized from a distance. In case of starting the operation in auto mode, a buzzer or an alarm will be useful.
- Make sure there is no protruding part on the peripheral devices of the robot. If necessary, place a cover on them. Otherwise, in general, an accident could occur when the worker comes into contact with a protruding part, and a major accident could occur when a worker surprised over a sudden movement of the robot could fall over.
- Do not design a system that requires the worker to put in hands inside the safety fence to carry in and carry out a workpiece.

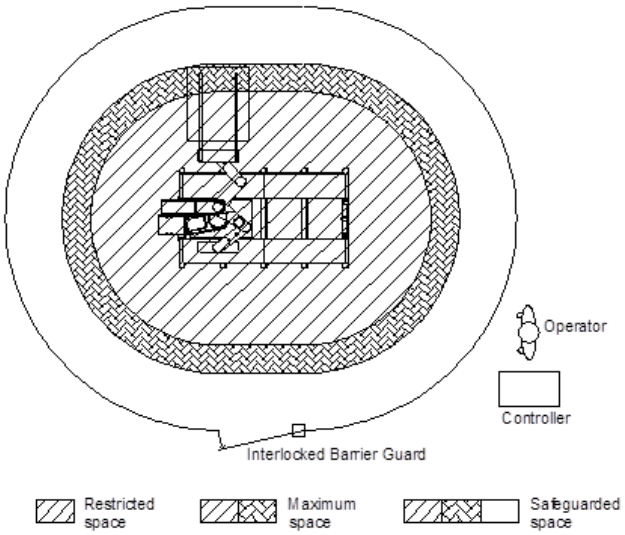


Figure 1.5 Beam Type Safety Fence for the LCD Handling Pobot

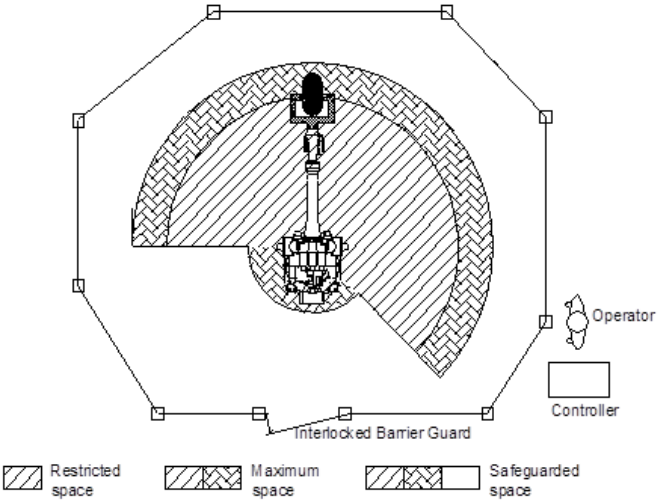


Figure 1.6 Cylinder Type Safety Fence for the Industrial Robot

### 1.10.3. Installation of the Robot

| | |
|---|---|
| ⚠ Warning | The robot should be installed and operated according to the guidelines of ISO 10218-2. In addition, it is required to comply with the relevant requirements of international standards and national laws.<br>Our company (or the manufacturer) will not be responsible for any accidents that occur due to not complying with the relevant requirements of international standards and national laws or due to not reviewing the "**risk assessment**". |

Installation of the product should be performed by a qualified installer according to relevant national and local regulations and laws.

- When unpacking the pruduct, check it for damage that may occur while transporting or unpacking it.
- Before installing the product after unpacking it, you must check the safety regulations, instructions, information related to the product installation and use environments, and fully undertand the installation methods.
- The worker who uses the robot should fully understand the contents described in the application and auxiliary manuals, and operate and handle the industrial robot skillfully.
- The worker who installs the robot should be able to apply the safety instructions during the installation if there is a problem.
- The system supplier should guarantee that all circuits used for safety functions perform their functions surely.

- The main power supply to the robot should be installed in a way that it can be cut off from outside the robot operation area.
- The system supplier should surely guarantee that all circuits used for safety functions perform their functions safely.
- The emergency stop button should be located at a place where the worker can easily approach it when required to stop the robot urgently.
- By taking into consideration the dimensions of the manipulator and the operation range, make sure that that there is no interference with peripheral devices.
- Avoid installing the robot in a place that is exposed to direct sunlight, has high level of humidity, has oil or chemicals around and has lots of metal powder or explosive gas in the air.
- Install the robot in an area where the ambient temperature is 0 - 45 ℃.
- Secure enough space for disassembling and inspecting the robot easily.
- Install a safety fence and prevent people from entering the robot operation range.
- Make sure there is no obstacle in the robot operation area.
- When installing the robot in an area exposed to direct sunlight or near a heating element, you should take measures in consideration of the thermodynamic state of the controller.
- Take additional measures when installing the robot in an area that has lots of dust such as metal powder in the air.
- Carry out installation in a way that welding current never flows to the robot. In other words, there should be insulation between the spot gun and the wrist of the robot.
- Since grounding is important for preventing a malfunction due to noise and an electric shock, you should install the robot as shown below.
    - Install the dedicated grounding terminal while setting it as Type 3 Grounding higher.
    - Connect the grounding wire to the grounding bus bar inside the control panel.
    - When the manipulator is installed, if it is directly grounded to the floor by an anchor, etc., the controller side and the manipulator side will make a two-point grounding, forming a closed circuit, which conversely may cause malfunctioning due to some reasons such as noise. In this case, connect the grounding wire to the base part of the manipulator, but not to the controller side. In addition, if there is shaking when the robot stops, there is a high possibility that the grounding is incomplete or there is a closed circuit. It is required to check the grounding again.
    - If you use a gun with an embedded transformer, there is a risk of dropping because the primary power cable is connected directly to the spot gun. In this case, in order to protect the control panel and prevent electric shock, connect the grounding wire directly to the base part of the manipulator and do not connect it to the controller.
- Carry out the installation by referring to the robot maintenance manual for each robot.
- After designating the soft limit suitable for the site situation, the positionining and adjustment of the hardware limit must be performed by a trained worker. After installation, you must check whether the functions are working well.

## 1.11. Safety Works When Operating the Robot

| | |
|---|---|
| ⚠Warning | Must observe safety work procedures to prevent safety accidents. Do not change or ignore safety devices or circuits under any circumstances, and pay attention to possible electric shock.<br>In auto mode, all normal works should be performed outside the safety guard. Before carrying out works, you must make sure that there are no people in the operation area of the robot. |

### 1.11.1. Safety Measures When Operting the Robot

Observe the following measures considering that safety is very important when operating the robot.

- The worker who operates or may operate the robot, and the supervisor should take certain trainings. Except for those who are recognized to be fully aware of the safety and functions of the robot and designated accordingly, any unqualified person should not operate the robot.
- Before operating the robot, you must check whether the product has been installed by a qualified installer in compliance with the relevant national and regional regulations and laws.
- Before operating the robot, check whether the safety functions are working normally.
- Must wear a safety helmet, protective glasses and safety shoes.
- Two people must work together. One person should be teaching and the other should be monitoring from the operation panel. One of the two should be ready to press the emergency stop switch at any time, and the other should perform the work quickly with sufficient care in the operation area. In addition, check the evacuation route before starting the work.
- Supply the power after confirming that there is no worker within the safety guard.
- Works such as teaching should be performed outside the robot safety guard in principle. However, when required to stop the system and work within the operation range, the worker should bring in the mode switch key (or a switch to change to the auto mode), or the safety plug when going inside. Such action is necessary to make sure that no other worker accidentally changes the robot to the auto operation mode. Also, pay special attention to the direction of the operation of the robot just in preparation for the robot malfunctioning or operating in wrong conditions.

  ※ The supervisor should observe the followings.

  - ■ The supervisor should be positioned at a location where she or he can see the robot entirely and should be dedicated to the duties of supervision.
  - ■ If there is any problem, press the emergency stop button immediately.
  - ■ Other people except for the persons involved in the work should not be allowed to stay within the operation range.
- In manual operation mode, the speed should be limited to a maximum of 250 mm/sec. At this time, you should progress the work while being prepared, together with the worker outide the guard, to press the emergency stop switch at any time if a problem occurs.

- When operating the robot manually in high-speed mode, you should progress the operation from outside the safety guard.
- When performing a teaching work, you shoud put up a sign [Teaching in progress].
- When required to enter inside the safety guard, the worker should pull out the safety plug or an equivalent, and then bring it in when going inside.
- Do not use equipment that could be a source of noise near the teaching place or its surroundings.
- Do not operate the robot operation buttons on the teach pendant just by using the feeling at the hands while watching the teaching points. Instead, operate the buttons while checking with bare eyes.

| | |
|---|---|
| ⚠ Warning | Sufficiently check under your feet when teaching. In particular, you must perform the teaching work outside the safety guard when teaching at a high spped (250mm/s or above). |

- Take the following measures when abnormality occurs.
  - ■ If abnormal operation is found, immediately press the emergency stop button.
  - ■ If abnormality is to be checked following an emergency stop, the stop status of the concerned facility must be checked.
  - ■ If the robot stops automatically due to abnormality with the power. Check first that the robot is stopped completely, and then investigate the cause and take measures.
  - ■ If the emergency stop device does not perform functions properly, immediately shut off the main power, and then investigate the cause and take measures.
  - ■ The investigation of the cause of the abnormality should not be performed by any other than the designated person. After the emergency stop, you should restart the system after surely identifying the cause of the abnormality and taking measure accordingly.
- Prepare proper work regulations, considering the installation location and work details, with regard to the robot operation and manipulation methods, and actions to take when abnormality occurs. In addition, work should be carried out according to the work regulations.
- Precautions to take when the robot is stopped
  - ■ Must avoid approaching the robot recklessly while thinking that the robot is stopped. When you approach the robot because you think it is stopped, the robot may suddenly move, causing an accident in many cases. The robot will be in the stopped state in the following cases.

Table 1-4 Status of the robot when it stop mode

| No. | State of the robot | Source of driving | Entry |
|---|---|---|---|
| 1 | In temporary stop mode<br>(Minor abnormality, temporary stop switch) | ON | X |
| 2 | In emergency stop mode<br>(Major abnormality, emergency stop switch and safety door) | OFF | O |
| 3 | Waiting for input signal from peripheral devices<br>(Start interlock) | ON | X |
| 4 | Playback being completed | ON | X |
| 5 | Waiting in progress | ON | X |

| | |
|---|---|
| ⚠ Caution | You should not be negligent in paying attention to sudden movements even when entry is made possible. Must avoid approaching without preparing for possible emergency situation under any circumstances. |

- ■ If the entrance door needs to be opened to take measures for minor abnormalities (such as nozzle contact, deposition detection and arc abnormality) during a temporary stop, the same measures as taken for opening the door for the teaching should be taken.

- After completing the robot operation, clean the inside of the safety fence to make sure that no tools, oil or foreign substances remain. If the operation area is stained with oil, or if tools are left in the operation area, it could cause an accident such as falling over. Make sure that arranging and organizing are performed always.

### 1.11.2. Safety Measures When Trial-Operating the Robot

| | |
|---|---|
| ⚠ Caution | In the case of trial-operation, there may be a design error, a teaching error, or a defect in manufacturing with regard to the entire system including the teaching program, jigs, and sequencing. For this reason, you should work with elevated safety awareness in trial-operation. Multiple factors can contribute to safety accidents. Observe the following measures considering that safety is very important when trial-operating the robot. |

- Before operating the robot, check the functions of buttons such as the emergency stop button and the stop button as well as the functions of relevant signals. After that, check the operation related to detection of abnormality. First of all, it is important to check all the signals that stop the robot. When an accident is expected, the most important thing is to stop the robot.

- When performing trial opreation of the robot, first set it to manual mode, input a job program with which you can test all axes, and then check the operation by repeating more than 1 cycle for each step While the robot is moving, open the safety guard or remove the enabling switch (enabling swith on the Teach Pendant) to see whether the robot stop. If a problem is found, press the emergency stop button to check whether the robot stops. If the emergency stop device does not perform its function well, immediately shut off the main power. After that, you should call the responsible aftersales person. If there is no problem, increase the speed in sequence (50% → 75% → 100%), and

check the operation by repeating more than 1 cycle each. Operating at high speed from the beginning may lead to a major accident.

- It is not possible to predict what kind of problem will occur during trial-operation. Never enter inside the safety fence during trial-operation. As the reliability is low, it is very likely that unexpected accidents could occur

### 1.11.3. Safety Measures for Auto Operation

Observe the following measures considering that safety is very important when operating the robot in auto mode.

- Put up a sign [No entry during operation] on the safety fence entrance and ask the worker to refrain from entering during operation. If the robot is stopped, you may enter inside the safety fence after judging the situation.
- When starting the auto operation, you must check whether there is a worker inside the safety fence. If you work without checking whether there is a worker inside, it may cause an accident involving people.
- When starting the auto operation, check first that that the program number, step number, mode, start selection, etc. are in proper state for auto operation. If you start the robot while an irrelevant program or step is selected, the robot may behave unexpectedly causing an accident.
- When starting the auto operation, check in advance that the robot is in the position where the robot can start the auto operation. Check also whether the program number or step number matches with the robot position. Even when the program or step is correct, if the robot is in a different position, an accident may occur due to an operation different from a normal operation
- Be prepared to press the emergency stop button immediately at the start of auto operation. If an unexpected robot operation or unexpecred situation occurs, immediately press the emergency stop button.
- Check the operation path, operation status, and operation sound, etc. of the robot to judge whether there is any abnormal state. The robot may suddenly cause an abnormality such as a failure, but it may give some symptoms before the failure occurs. In order to predict this in advance, it is required to well understand the normal operation status of the robot.
- If any abnormality is found, immediately make an emergency stop and take proper measure for it. Using the robot without proper measures could lead to a severe failure that may lead to production interruption and significant accidents involving people.
- While completing measures and checking the operation after an abnormality occurred, do not operate the robot while the worker is still inside the safety fence. Unexpected accidents such as other abnormalities may occur as the reliability is low.
- Before selecting the auto mode, if there is a safety device function that has been stopped, you should progress works after recovering the function back to completely normal state.

## 1.12. Safety Measures When Entering Inside the Safety Fence

When required to enter the safety door in the robot operation area, a worker and a super visor who have received certain trainings should perform works in a group of two. Also, they must wear a safety helmet, protective glasses and safety shoes. The supervisor should be prepared to press the emergency stop switch at any time, and the worker must bring in the teach pendant when going inside, making impossible for other people to operate the robot. Must put up a sign on the control panel to indicate that the robot is being operated.

When you enter the robot operation area, you must full understand the following items.

- No one except for the teaching person should enter the robot operation area.
- The operation setting mode of the controller should be manual mode on the control panel.
- Always wear certified work clothes.
- Do not wear gloves when operating the controller.
- Don't let underwear, shirt, tie etc. come out of the work clothes.
- Do not wear large jewelry such as earrings, rings or necklaces.
- Must wear safety shoes, safety helmet and protective glasses, and, when necessary, should wear safety gear such as safety gloves.
- Before operating the robot, check if the emergency stop circuit is functioning well to turn off the motor when the emergency stop button on the control panel or the teach pendant is pressed
- Work in a position facing the manipulator.
- Follow predetermined work procedures.
- Thinking that the robot may rush towards you unexpectedly, you should prepare a method or place for evacuation.

| | |
|---|---|
| ⚠ Caution | You should not be negligent in paying attention to sudden movements even when entry is made possible. Must avoid approaching without preparing for possible emergency situation under any circumstances. |

## 1.13. Safety Measures When Maintaining and Inspecting

### 1.13.1. Safety Measures When Maintaining and Inspecting the Controller

Observe the following safety measures when maintaining and inspecting the robot controller.

- Maintenance and inspection works should be performed only by those who have received special maintenance trainings and fully understand the related contents.
- Progress the work according to the controller maintenance and inspection procedures.
- For the maintenance and inspection works, you must check the surroundings for safety and secure a passage or a place to avoid danger before progressing the work safely.
- Must turn off the power before performing daily inspection or maintenance of the robot or replacement of parts. In addition, in order to prevent other workers from inadvertently turning on the power, put a warning marking such as [Power-On Prohibited] on the primary power supply.
- Always use the designated replacement parts.
- When required to open the controller door, you must turn off the power first and then wait for about 3 minutes before starting the work.
- Use external lighting when sufficient illumination is not secured when performing maintenance and inspection works inside the controller.
- Do not touch the heat sink and regenerative resistor of the servo amplifier because they generate excessive heat. After maintenance, check whether tools, foreign substances, etc. are left behind inside the controller, and then close the door securely.

### 1.13.2. Safety Measures When Maintaining and Inspecting the Robot System and Manipulator

Observe the following safety measures when maintaining and inspecting the robot system and manipulator.

- Refer to safety measures for the maintenance and inspection of the controller.
- When maintaining and inspecting the robot system and manipulator, proceed with the work according to the instructed procedures.
- Must cut off the main power of the controller. In order to prevent other workers from powering it up again, put a warning marking such as [Power-On Prohibited] on the primary power supply.

| | |
|---|---|
| ⚠ Caution | During maintenance and inspection of the manipulator, the robot arm may fall, or there could be a different type of danger. So, you must proceed with the work according to the instructed procedures. |

| | |
|---|---|
| ⚠ Caution | When moving the axis of the robot without driving force applied, there is a risk of the axis dropping due to gravity and also an additional risk due to the release of the brake system. So, you must proceed with the work according to the instructed procedures. |

### 1.13.3. Actions to Take after Maintenance and Inspection

Observe the following actions after maintenance and inspection.

- Check if the wires or parts inside the controller are connected normally.
- After maintenance, check whether any tool is left behind inside and around the controller, manipulator or the robot system, and keep them surely arranged and organized. Must close every door.
- If any problem or fatal defect is found, do not turn on the power of the robot.
- Turn on the main breaker in the control panel.
- Check the current position and status of the robot.
- Operate the robot at a low speed.

| | |
|---|---|
| ⚠ Caution | Before turning on the power, check that there is no worker inside the robot operation area and you are in a safe place |

| | |
|---|---|
| ⚠ Warning | When it comes to the change of components or additoin of optional equipment (both hardware and software) to the robot both of which may affect safety-related functions, you must check whether the functions are in normal conditions, by paying attention to the items described in “1.11 Safety Works When Operating the Robot”. |

## 1.14. Safety Related to End Effctors

| | |
|---|---|
| ⚠ Warning | When installing and operating end effectors, you must comply with ISO 10218-1:2018 in applying, maintaining and operating them. |

Refer to the maintenance manual of each robot for detailed specifications regarding the installation of end effectors.

### 1.14.1. Gripper

- When a gripper is used to hold a workpiece, there should be a measure to take against abrupt dropping of the workpiece.
- When installing the device onto an end effector or arm, you should use the bolts of specified sizes and the specified number of bolts, and tighten them completely according to regulated torques by using torque wrenches. You should use bolts that are not rusted or stained.
- When manufacturing an end effector, you should take into account that it can be used within the allowable load value of the wrist of the robot. An end effector should hava a structure that will not allow a gripped material to be released or dropped even when the power supply or air supply is interrupted, and the corners and protrusions should be surely treated in order to prevent people or objects from suffering any damage.

### 1.14.2. Tools/Workpieces

- It should be possible to safely change tools such as a milling cutter. Until the cutter stops rotating, the safety devices should surely perform proper functions.
- The tool should be designed in a way that the workpiece will not have any abnormality even when a sudden power failure or control failure occurs. In manual operation, it should be possible to separate the workpiece.

### 1.14.3. Pneumatic / Hydraulic Systems

- Special safety laws will be applied to the pneumatic and hydraulic systems.
- In this type of systems, as residual energy may remain even after the system is shut down, you should pay attention in particular. Before repairing the pneumatic or hydraulic systems, you must remove the pressure inside the devices.

# 2

# Details of Specifications

## 2.1. Details of Specifications of Each Controller Model

Table 2-1 Details of Specification of Each Controller Model

| Model | | Hi7-N00-A0<br>Hi7-N30-A0<br>Hi7-N80-A0 | Hi7-N00U-A0<br>Hi7-N30U-A0<br>Hi7-N80U-A0 |
|---|---|---|---|
| CPU | | 2.7GHz Dual core | |
| Program execution method | | Teaching and playback | |
| Opertion method | | Menu-based | |
| Interpolation type | | PTP, linear and circular | |
| Memory backup method | | Batter backup IC memory | |
| Encoder type | | Absolue encoder | |
| Servo drive unit | | 6 axes integrated, digial servo | |
| Maximum number of units | | Maximum 32 axes simultaneously | |
| Step | | 10,000,000 steps | |
| Program selection | | 255 (binary)/8 (discret) | |
| Display on the teach pendant | | 7-inch colorful TFT-LCD (800x480) | |
| Fieldbus interface (optional) | | DeviceNet, ProfiNET, Modbus TCP/UDP, EtherCAT | |
| Digital I/O (optional) | | Input: 36 points (maximum 44 points) / Output: 36 points (maximum 44 points) | |
| Analogue I/O (optional) | | Input: 4 points / Output: 4 points | |
| Conveyor pulse counter (optional) | | Line driver / Open collector | |
| Communication interface | | 3Ethernet port/ 2 USB 2.0 ports/ 2 RS232 ports | |
| Circuit board | Main module | H6COM-T | |

| Model | | Hi7-N00-A0<br>Hi7-N30-A0<br>Hi7-N80-A0 | Hi7-N00U-A0<br>Hi7-N30U-A0<br>Hi7-N80U-A0 |
|---|---|---|---|
| | Servo-Safety board | BD642 | |
| | Back plane board | BD604 | |
| | Power supply module | H7PSM(BD6C3) | |
| Drive module | For medium-sized 6 axes | N00(U)-A0 : H7D6X<br>N80(U)-A0 : H7D6X<br>N30(U)-A0 : H7D6A | |
| | For one additional axis | H7D1X, H7D1Z | |
| Wire harness | | CMC1, CMC2, CEC1 | |
| Teach pendant | | TP630 | |
| Rated supply voltage | | 3-phase 220V(50/60 Hz)±10%<br>Option: 3-phase 380V, 400V, 415V and 440V | 3-phase 220V(50/60 Hz)±10%<br>Option: 3-phase 460V and 480V |
| Maximum power consumption | | Hi7-N80(U)-A0: 10.5KVA<br>Hi7-N00(U)-A0: 7.8KVA<br>Hi7-N30(U)-A0: 4.4KVA | |
| Operation temperature | | 0 ~ 45 ℃ | |
| Operation humidity | | 75 % | |
| Protection grade | | IP54 | |
| Noise level | | Maximum 68 dB | |
| Exterior diemsion*1 (WxHxD) | | W680xD520xH550 (mm)<br>Caster 100mm Exclude | |
| Weight | | Standard Specification(Exclude TR)<br>Hi7-N30(U): 80kg<br>Hi7-N00(U): 80kg<br>Hi7-N80(U): 90kg<br><br>Optional Specification(Include TR)<br>Hi7-N30(U): 140kg<br>Hi7-N00(U): 160kg<br>Hi7-N80(U): 170kg | |

Table 2-2 Power Requirements

| Controller type | Capacity *1) [KVA] | Input voltage *2) [V] | Frequency[Hz] | Peak current [A] |
|---|---|---|---|---|
| Hi7-N30 | Max. 4.4 KVA | 220/380/400/415/440V | 50/60 | 15 A |
| Hi7-N00 | Max. 7.8 KVA | 220/380/400/415/440V | 50/60 | 30 A |
| Hi7-N80 | Max. 10.5 KVA | 220/380/400/415/440V | 50/60 | 50 A |
| Hi7-N30U | Max. 4.4 KVA | 460/480V | 50/60 | 15 A |
| Hi7-N00U | Max. 7.8 KVA | 460/480V | 50/60 | 30 A |
| Hi7-N80U | Max. 10.5 KVA | 460/480V | 50/60 | 50 A |

Note 1) Power capacity: Refers to the power supply capacity of the controller. For the power capacity of each robot, refer to the manipulatofr maintenance manual.
Note 2) Voltage range: ±10% (at the power terminal of the controller

## 2.2. Exterior of the Controller

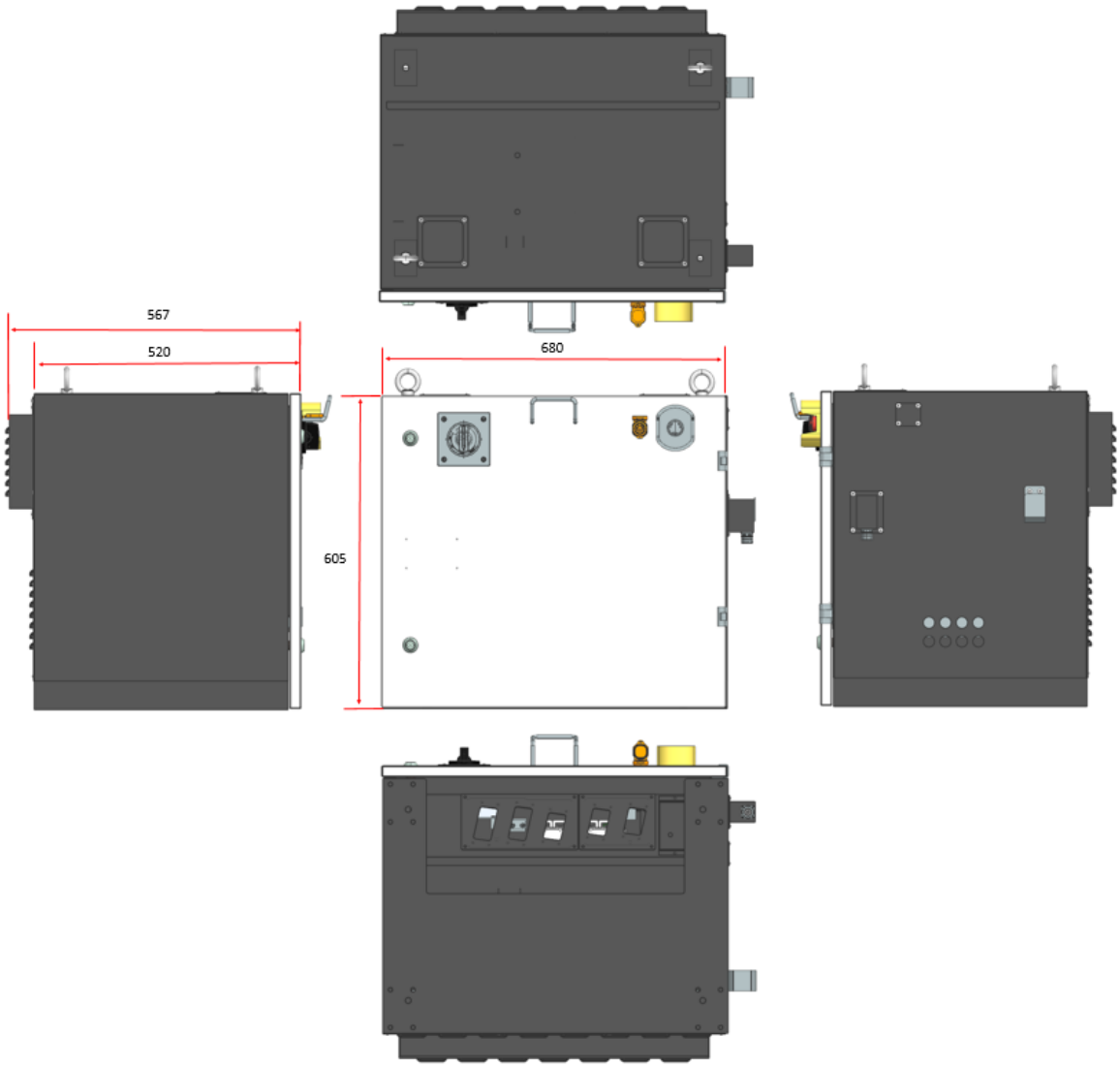


Figure 2.1 Front Exterior of the Controller

# 3

# Installation of the Controller

If you properly install, transport, and store the product in consideration of the position and direction of the installation and the size of the surrounding space, you can secure the service life of the product and prevent the degradation of its performance.

- Checking of the installation and use environments
- Transport of the controller
- Storage of the controller
- Discarding of the controller

| | |
|---|---|
| ⚠ Catuion | Before installing the product, you must perform a risk assessment sufficiently and then set the safety function based on the assement results. For details on safety functions, refer to "1. Safety". |

## 3.1. Configuration

### 3.1.1. Basic Configuration

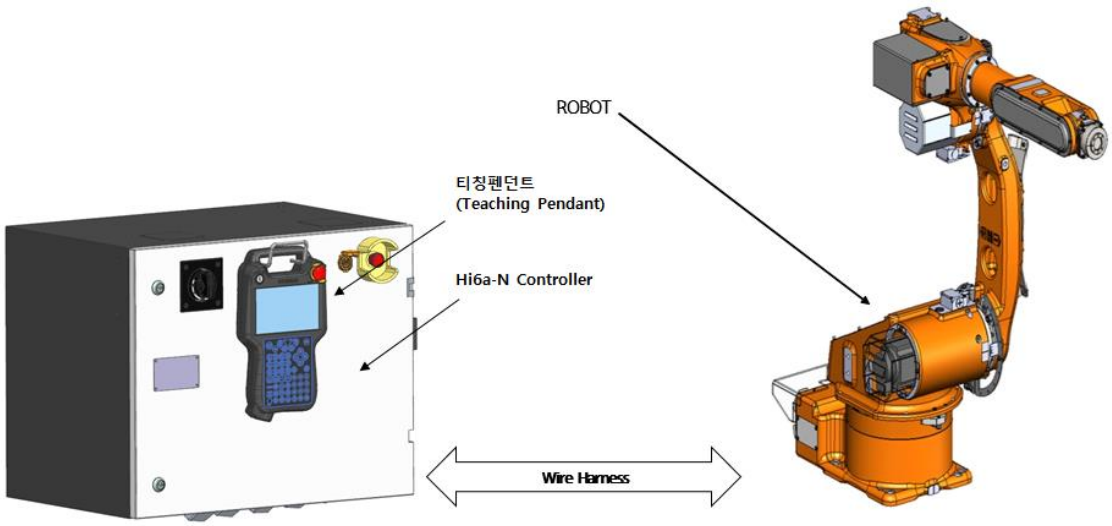


Figure 3.1 Basic Installation Configuration of the Industrial Robot

- Hi7 controller
- Teach Pendant
- Wire harness (Hi7 controller ↔ robot)

- Robot

## 3.1.2. Checking of Various Name Plates

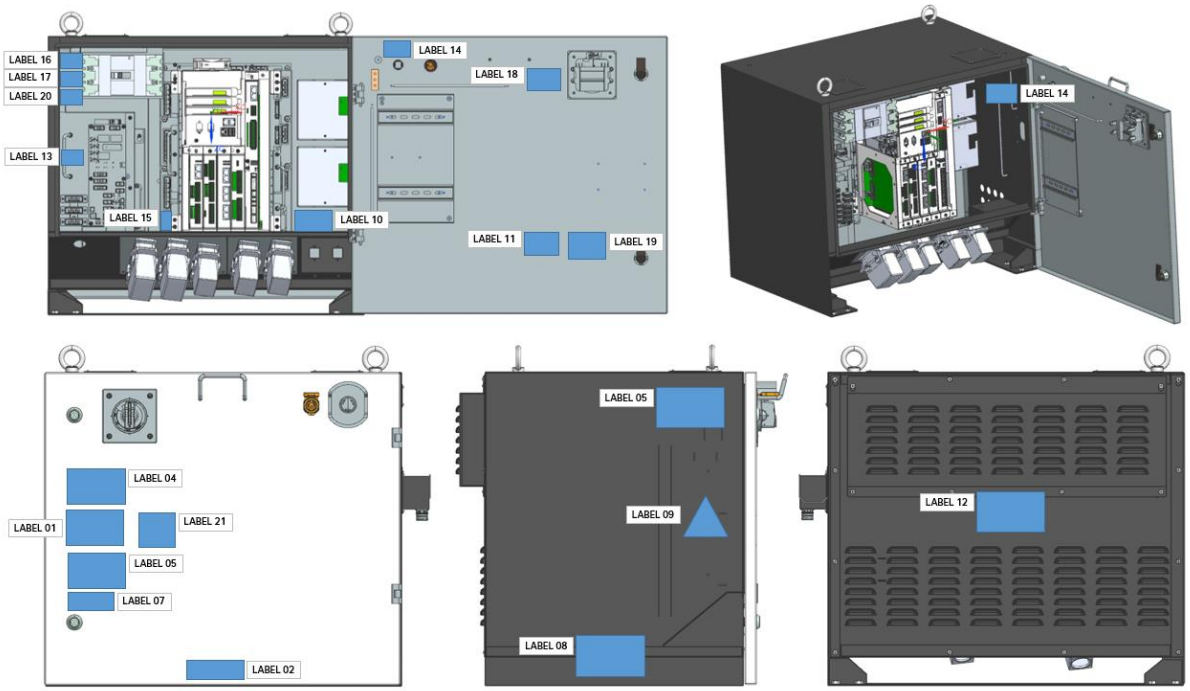


Figure 3.2 Controller's Labels

Table 3-1 Label Type

| No. | Korean | English |
|---|---|---|
| 1 | - | 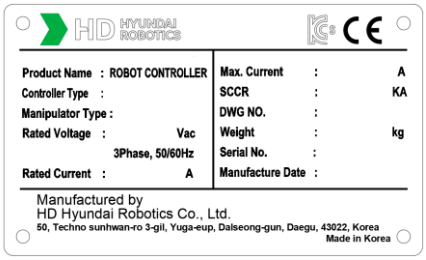 HD HYUNDAI ROBOTICS<br>Product Name : ROBOT CONTROLLER<br>Controller Type :<br>Manipulator Type :<br>Rated Voltage : Vac<br>3Phase, 50/60Hz<br>Rated Current : A<br>Max. Current : A<br>SCCR : KA<br>DWG NO. :<br>Weight : kg<br>Serial No. :<br>Manufacture Date :<br>Manufactured by<br>HD Hyundai Robotics Co., Ltd.<br>50, Techno sunhwan-ro 3-gil, Yuga-eup, Dalseong-gun, Daegu, 43022, Korea<br>Made in Korea |
| 2 | HYUNDAI | HYUNDAI |
| 3 | EMERGENCY STOP | EMERGENCY STOP |

| No. | Korean | English |
|---|---|---|
| 4 | **경 고**<br>**고전압**<br>- 고전압에 의해 중대한 인명사고가 일어날 수 있으므로 다음을 준수해 주십시오.<br>- 제어기 문을 열 때는 반드시 전원을 OFF해 주십시오.<br>- 수리시에는 전원을 OFF한 후 자물쇠를 이용하여 전원스위치를 OFF로 잠가주십시오. | **WARNING**<br>**High Voltage**<br>- High voltage can cause injury or death.<br>- Control cabinet must be turned to "OFF" before opening cabinet door.<br>- The Robot System must be switched off before any maintenance, exchange, repair.<br>- Padlock must be used to lock the power switch to "OFF" . |
| 5 | **주 의**<br>- 설치작업 전에 조작설명서 및 안전지침서를 주의깊게 읽어주십시오.<br>- 조작 중에는 로봇 작업영역 내로 들어가지 마십시오.<br>- 케이블을 연결하기 전에 로봇 본체와 제어기의 일련번호가 동일한지 확인하여 주십시오. 일련번호가 다를 경우, 비정상적인 동작을 일으킬 수 있습니다. | **CAUTION**<br>- Carefully read the operation manual and the safety manual before installation and using application.<br>- Do not enter the working range of the Robot system under operation.<br>- Before cables connecting, check that the S/N is identical on the controller and on the manipulator.<br>- If the S/N is different, robot may be operated abnormally. |
| 6 | 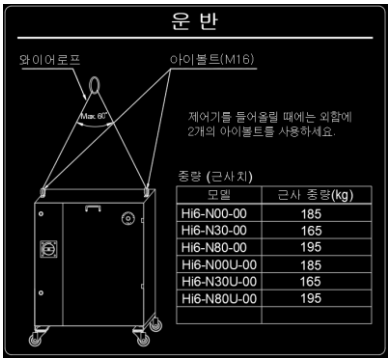 | 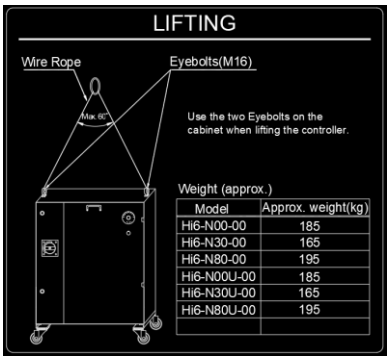 |
| 7 | **Hi7-N00-00**<br>**Hi7-N00U-00** | **Hi7-N00-00**<br>**Hi7-N00U-00** |
| 8 | **알 림**<br>제어기를 이동하지 않을 때에는 반드시 바퀴의 고정장치를 '고정' 위치로 해 주십시오. | **NOTICE**<br>Lock the caster of control cabinet unless it needs to be moved. |
| 9 | **AC220 VOLTS** | **AC220 VOLTS** |

| No. | Korean | English |
|---|---|---|
| 10 | 경 고<br>고전압 ! 충전 에너지!<br>DC400V의 충전된 에너지가 존재합니다.<br>완전히 방전 시키기 위해 전원 OFF후<br>5분 이상 기다리십시오. | WARNING<br>High Voltage ! Stored Energy!<br>Be careful of stored energy of DC 400V.<br>Wait more than 5 minutes for<br>deenergizing after power off. |
| 11 | Controller Ass'y No.<br>DATE : . . .<br>Ass'y No. : PJ-RY00123-1211-001<br>HD HYUNDAI ROBOTICS<br>Tel : 82-53-670-7114 Fax : 82-53-615-6517 | Controller Ass'y No.<br>DATE : . . .<br>Ass'y No. : PJ-RY00123-1211-001<br>HD HYUNDAI ROBOTICS<br>Tel : 82-53-670-7114 Fax : 82-53-615-6517 |
| 12 | 주 의<br>공기 순환용 흡/배기구를 막지 마십시오.<br>제어기에 심각한 손상을 입힐 수 있습니다. | CAUTION<br>Ensure no interference for air circulation<br>of ventiduct.<br>Interference may cause controller damage. |
| 13 | Part : H6PSM30<br>Type : V10A<br>S/N : BK-2008-0001 | Part : H6PSM30<br>Type : V10A<br>S/N : BK-2008-0001 |
| 14 | CNRTP | CNRTP |
| 15 | H6D6XV20-3X3Y-111111 | H6D6XV20-3X3Y-111111 |
| 16 | NFB1 | NFB1 |
| 17 | PE | PE |
| 18 | - | PASSED<br>LINE QC \| QM<br>Worker : (sign) |

| No. | Korean | English |
|---|---|---|
| 19 | **Fuse Ratings**<br>Circuit / Schematic ID / Fuse Current Rating(A) / Fuse Voltage Rating(V) / Fuse Type / Fuse Maker<br>Fan (H6PSM) / F1 ~ F2 / 5A / 250V / 0218005 / Littlefuse<br>Control (H6PSM) / F3 ~ F4 / 5A / 250V / 0218005 / Littlefuse<br>Brake (H6PSM) / F5 ~ F6 / 5A / 250V / 0218005 / Littlefuse | **Fuse Ratings**<br>Circuit / Schematic ID / Fuse Current Rating(A) / Fuse Voltage Rating(V) / Fuse Type / Fuse Maker<br>Fan (H6PSM) / F1 ~ F2 / 5A / 250V / 0218005 / Littlefuse<br>Control (H6PSM) / F3 ~ F4 / 5A / 250V / 0218005 / Littlefuse<br>Brake (H6PSM) / F5 ~ F6 / 5A / 250V / 0218005 / Littlefuse |
| 20 | ⏚ | ⏚ |
| 21 | TÜV NRTL C US | TÜV NRTL C US |
| 22U | 주 의<br>구리, 구리도금 알루미늄, 알루미늄 재질의 도체를 사용하여 연결하십시오. | CAUTION<br>Use Copper, Copper clad Aluminum, or Aluminum conductors. |

| | |
|---|---|
| ⚠ Warning | Any act of damaging the safety labels, such as relocating the name plates, warning markings, safety symbols, name markings and wire markings or painting over them or blocking them with a cover is prohibited. |
| ⚠ Caution | Mark the installation and dangerous areas of the robot in a way that they can be differentiated from other facilities and devices in terms of type, color and style. |

## 3.2. Installation and Use Environmets

Install the product in an appropriate place in consideration of the installation and use environments and conditions.

- The proper use temperature of the product is 0℃ - 45℃, and the proper storage humidity is 20 to 85%RH.
- Do not drop the product or apply a strong impact to it while moving or using it.
- Transport and install the product in a correct way based on the weight of the product while paying attention to the safety.
- Install and use the product in a solid, flat and vibration-free area where the product will not turn over easily.
- Do not install and use the product in an area with a lot of foreign substances such as water, moisture, gas, dust, or in a dirty place.
- Do not install or use the product in an area with flammable and corrosive substances or gases, or in an area wherer heat is generated, or near heat of fire.
- Do not install or use the product in an area that has a source of strong electrical noise or is affected by it.
- Install the controller in a safe area by referring to "1.10 Safety Measures When Installing".
- Carry out the controller maintenance work by referring to "1.13. Safety Measures When Maintaining and Inspecting".
- When installing the product in an area where welding work is performed, install the product in a location where there will be no effect from welding spatter and cooling water.
- When installing the controller, keep a distance of at least 500mm if there is a wall or obstacle nearby.
- For the matters related to the installation of the robot, refer to each robot maintenance manual.

| | |
|---|---|
| ⚠ Caution | If the product is not installed in the recommended locations, the performance and service life of the product may be reduced. Install and use the product according to the recommendations. |

| | |
|---|---|
| ⚠ Warning | The robot should be installed and operated according to the guidelines of ISO 10218-2. In addition, it is required to comply with the relevant requirements of international standards and national laws.<br>Our company (or the manufacturer) will not be responsible for any accidents that occur due to not complying with the relevant requirements of international standards and national laws or due to not reviewing the "**risk assessment**". |

## 3.3. Transport of the Controller

The following items describle the precautions to take in packing, transporting, and unpacking the Hi7 controller. Rrefer to the robot maintenance manual for the matters related to the packing and transport of the robot.

### 3.3.1. Packing

- Attach the model name plate to the box.
- Protect all exposed connectors with a dust cap or polyvinyl.
- When the teach pendant is packaged in a box, use an air-filled cushioning to prevent the LCD from getting damaged due to external impact.
- Attach the waterproofed packing list to the outside of the box.

### 3.3.2. Transport (Modifying the Weight)

- Check whether the front door of the controller is completely locked.
- Remove anything that is not fixed onto the controller.
- Check if the eye bolts on the controller are surely fastened.
- As the controller is a precision device, pay attention to the transport of it to prevent any strong impact from being applied to it.
- The weight of the controller is maximum 170kg. When using a crane, take precautions to prevent an object on the controller from being damaged by the wire.

  ※ For the weight of the controller, refer to “2. Details of Specifications’.

- When using a forklift, fix the controller in a way to prevent the controller from shaking.
- When moving the product by vehicle, fix the manipulator and controller by using squids.
- When transporting the product, fully understand the contents related to the packing and transport, and follow the instructions. Our company will not be responsible for any damage to or breaking of the product due to customer’s carelessness, inexperience in operation, or negligence.
- Check the following items when transporting the controller by using a crane.
  - In general, the controller should be transported by using crane wires for which eye bolts are used.
  - Check whether the wires have sufficient strength to withstand the weight of the controller.
  - Check whether the eye bolts are fastened tightly.

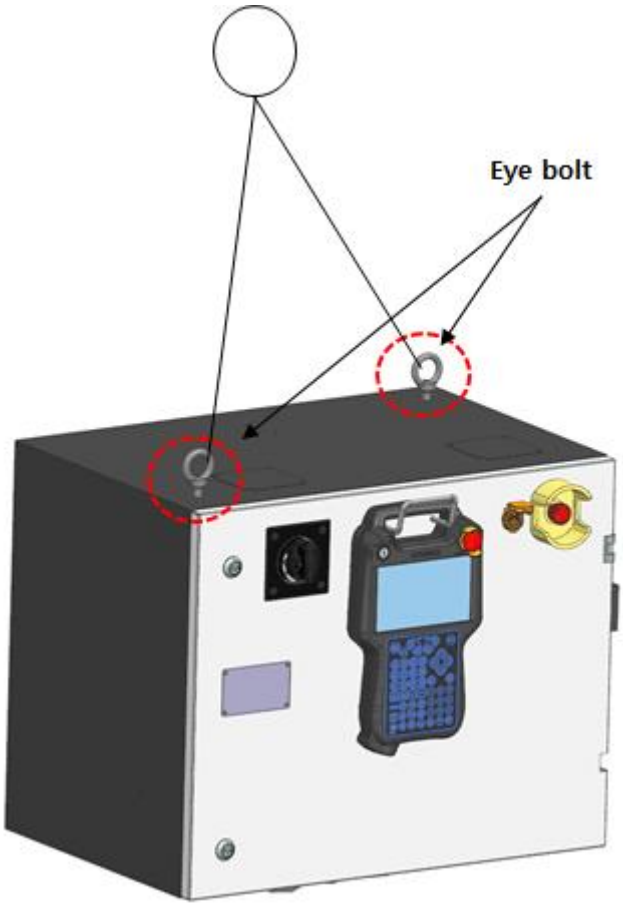


Figure 3.3 Controller Wire Connection Position

- Check the following items when transporting the controller by using a forklift,
  - When transporting the product by using wire ropes, use a wire that can withstand the weight of the controller.
  - Check whether the eyebolts are firmly fixed.
  - Transport the controller while keeping it as low as possible.

Figure 3.4 Transport of the Controller by Using a Forklift

| | |
|---|---|
| ⚠ Warning | If you transport the product by uisng lifting equpment, you should comply with the relevant national and local safety regulations and equipment usage guidelines. When moving the product by using a crane, you must make sure that that no workers are under the product. Also, never work or walk under the crane or the product. |

### 3.3.3. Unpacking

- Fully understand the safety regulations and other guidelines carefully before unpacking and installing the robot.
- Unpack the product according to the unpacking instructions.
- Check whether the location is an area where the robot and controller can be safely installed.
- Check if a path that allows the robot and controller to move safely is secured.
- Transport of the robot should be performed by a qualified person.
- When unpacking the product, check that whether there is any damage that might have occurred during transport or unpcking.

## 3.4. Storage of the Controller

When storing the controller, instead of installing it, refer to the following items.

- Store the controller while keeping it in the packaged state and seal the power and communication connection parts tightly.
- When storing the controller for a long time, you must take safety measures against the risk of it falling over.
- When storing the controller wrapped in packing material, pack it with a desiccant or store it in a dry place. If it is stored in a highly humid place, moisture may form inside the packing material, damaging the product.
- Avoid places where temperature and humidity may change easily (where condensation occurs) and store the controller in a cool, dry place where the ambient temperature ranges from -15 ℃ to 40 ℃.
- Do not store the controller in locations where there are chemical products, acid and alkali products, batteries, circuit breakers, etc.

## 3.5. Discarding of the Controller

In order to ensure user safety and protect the environment, certain parts should be managed and discarded according to specified methods, and if they contain industrial waste materials, they must never be discarded together with general industrial or household waste. When discarding all or part of the robot system, you must comply with the relevant national or local regulations and laws. For details on the discarding and disposal of the product, please contact our customer support team.

## 3.6. Connection

| | |
|---|---|
| ⚠ Caution | 1. Before connecting the cables, turn “off” the controller's main power switch and lock it by using use a padlock.<br>2. The controller has DC400V charged energy. Be careful.<br>Turn “off” the power switch and then wait 5 minutes at least to discharge the charged energy.<br>3. When handling the PCB, take precautions not to allow static electricity to damage it.<br>4. Wiring and connection of wires must be performed by qualified personnel. |

### 3.6.1. Connection of the Teach Pendant

Connect the cable connector of the Teach Pendant to the CNRTP receptacle of the controller.

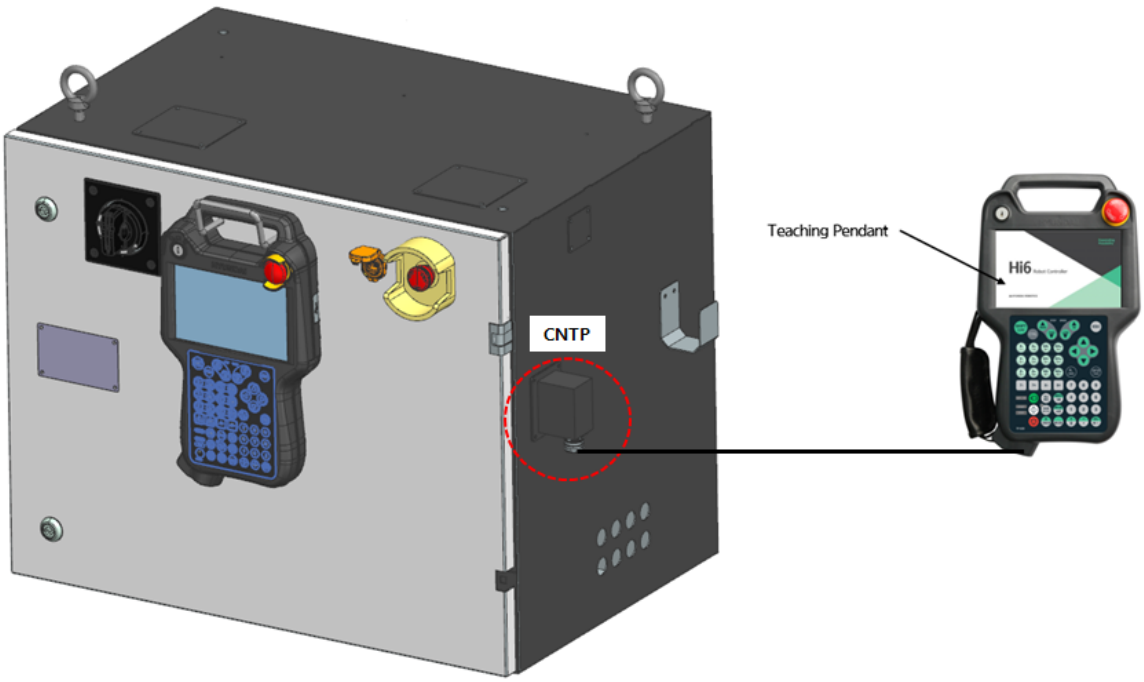


Figure 3.5 Connection of Hi7-N**(U) Teach Pendant

### 3.6.2. Connection of the Manipulator and Controller

Connect between the manipulator and controller by using a wire harness. Check the names of individual receptacles while connecting them.

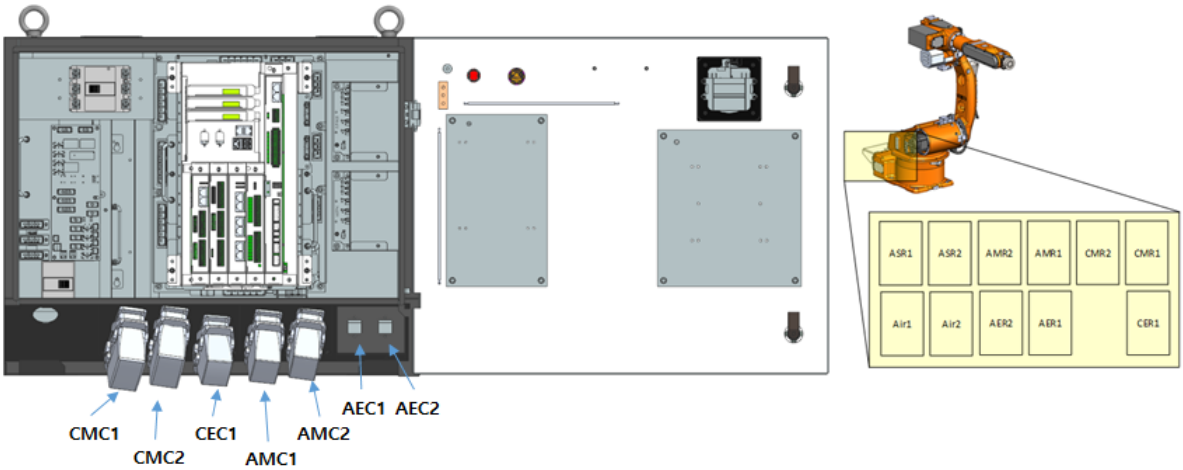


Figure 3.6 Connection of the Manipulator and Controller (Hi7-N**(U))

Wire Harness connection diagram

| Hi7-N Controller | ROBOT |
|---|---|
| CMC1 | CMR1 |
| CMC2 | CMR2 |
| CEC1 | CER1 |
| AMC1 | AMR1 |
| AMC2 | AMR2 |
| AEC1 | AER1 |
| AEC2 | AER2 |

| | |
|---|---|
| ⚠ Caution | Since the contact part of the connector for each robot may be different from the figure above, you must read the relevant robot maintenance manual carefully before connecting the wire harness. |

### 3.6.3. Connectin of the Controller and Primary Power

Check whether the power has been removed from the primary power and breaker (NFB).
In the case of a Hi7-N** controller, insert the power cable through the power inlet and then connect it to the breaker (NFB).
At this time, use a terminal receptable of an appropriate size for the end side of the primary power supply cable.

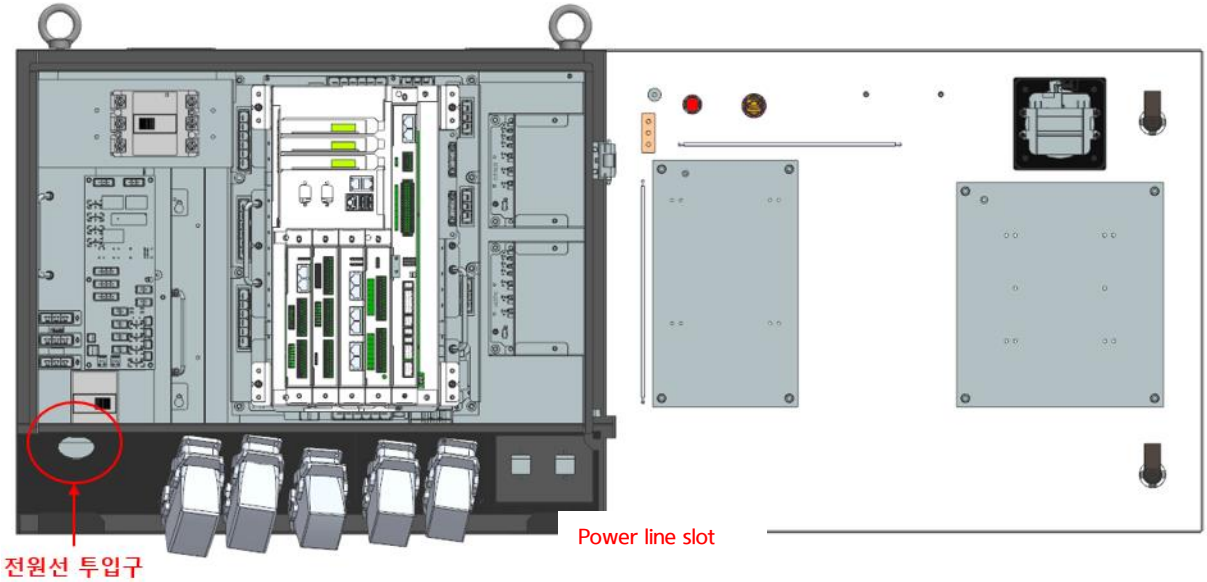


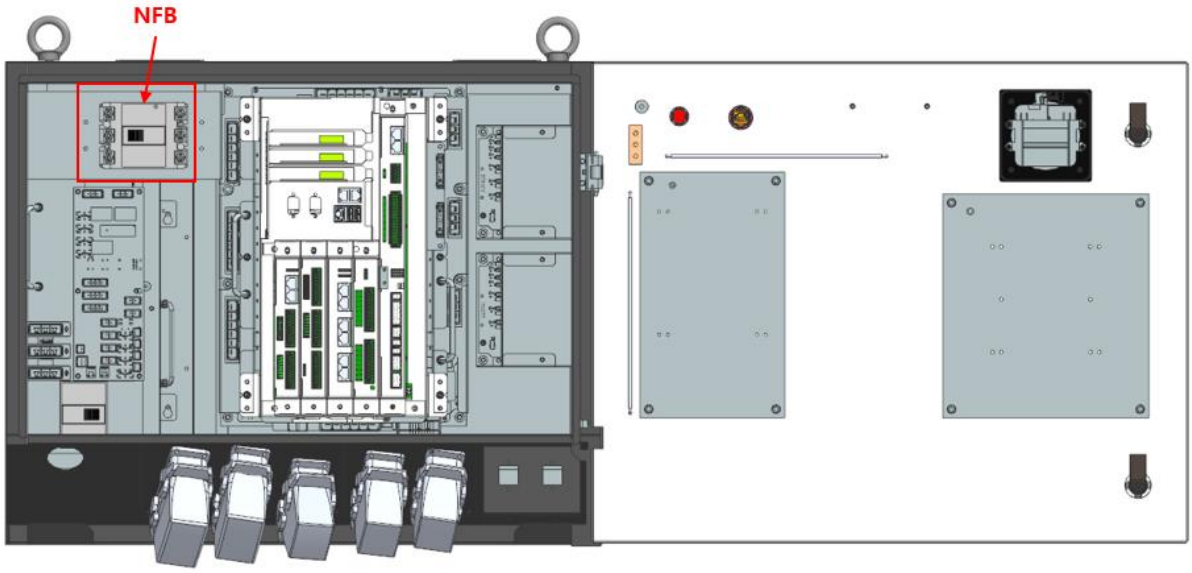


Figure 3.7 Primary Power Connection Part of Hi7-N**(U) Controller

### 3.6.3.1. Power Requirements

Table 3-2 Power Requirements

| No. | Controller type | Capacity*1) [KVA] | Input voltage *2) [V] | Frequency [Hz] | Peak current [A] |
|---|---|---|---|---|---|
| 1 | Hi7-N00 | Max. 7.8KVA | 220V/380V/400V/440V | 50/60 | 30A |
| 2 | Hi7-N30 | Max. 4.4KVA | 220V/380V/400V/440V | 50/60 | 15A |
| 3 | Hi7-N80 | Max. 10.5KVA | 220V/380V/400V/440V | 50/60 | 50A |
| 4 | Hi7-N00U | Max. 7.8KVA | 460V/480V | 50/60 | 30A |
| 5 | Hi7-N30U | Max. 4.4KVA | 460V/480V | 50/60 | 15A |
| 6 | Hi7-N80U | Max. 10.5KVA | 460V/480V | 50/60 | 50A |

Note 1) Power capacity: Refers to the power supply capacity of the controller. For the power capacity of each robot, refer to the “Manipulator Maintenance Manual”.
Note 2) Voltage range: ±10% (at the power terminal of the controller)

### 3.6.3.2. Power Cable Thickness

Table 3-3 Recommended Minimum Cable Thickness

| No. | Cable length m | Cable thickness (Hi7-N00(U), Hi7-N80(U)) | | Cable thickness (Hi7-N30(U),Hi7-N20(U)) | |
|---|---|---|---|---|---|
| | | $mm^2$ | AWG | $mm^2$ | AWG |
| 1 | 0 - 50 | 5.5 | 10 | 3.5 | 12 |
| 2 | 50 - 100 | 5.5 | 10 | 3.5 | 12 |
| 3 | 100 - 180 | 8 | 8 | 5.5 | 10 |
| 4 | 180 - 300 | 8 | 8 | 5.5 | 10 |

### 3.6.4. The Controller and Grounding

For using the controller safely, connect the grounding wire to the controller. Use a grounding wire of 5.5 ㎟ or more. (Grounding of Category 3).
The ground terminal location of the controller is shown in Figure 3.9.

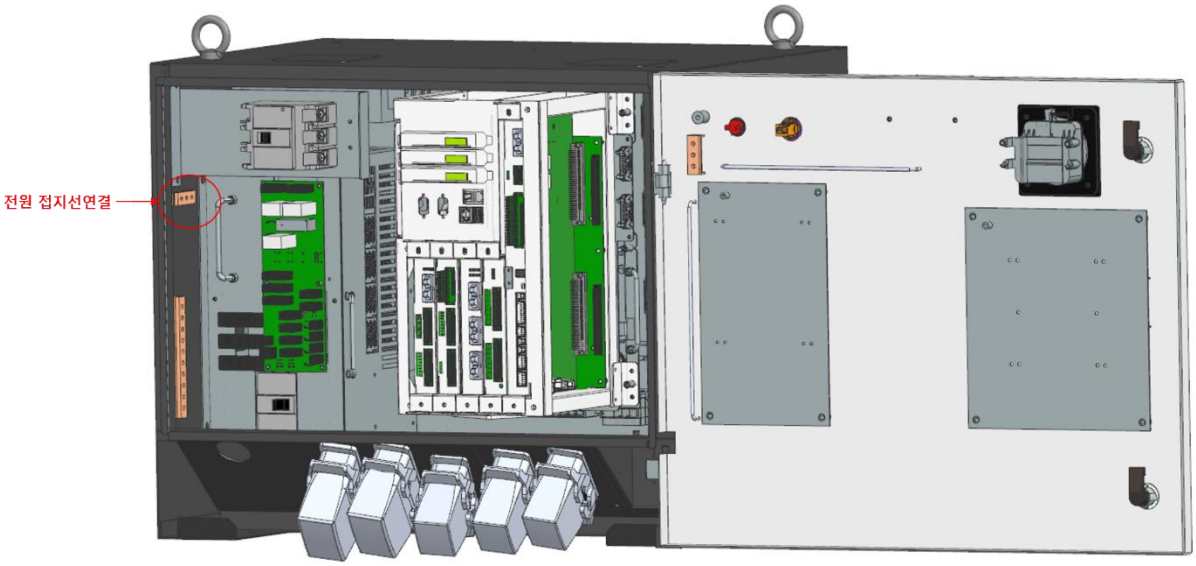


Figure 3.8 Power Ground Terminal of the Controller

### 3.6.5. Other Cautions

| | |
|---|---|
| ⚠ Caution | 1. When wiring the controller and manipulator, separate the signal line and the power line.<br>In addition, use separate ducts respectively for high power lines and signal lines.<br>2. Use a protective cover for the wires, as a measure to prevent the wires from getting damaged when people are passing.<br>3. Before supplying the primary power, you must check again the relationship in terms of connection, the power specification and the power supply specification of the controller. |

### 3.6.6. Connection of the Ethernet Port for the User

The Ethernet port for the user is located on the front door of the controller. The pin descriptin and connection with a Pc are as follows.

Table 3-4 Pin Description (RJ45 Connector Specification; RJ 45P Shield)

| RJ45 Pin No. | Name | Abbreviation | Direction |
|---|---|---|---|
| 1 | Transmit Data + | TX + | Out |
| 2 | Transmit Data - | TX - | Out |
| 3 | Receive Data + | RX + | In |
| 6 | Receive Data - | RX - | In |

# 4

# Basic Configuration of the Controller

| | |
|---|---|
| ⚠ Caution | The person in charge of maintenance should work after understanding the placement of various devices and parts and their functions inside the controller. |

## 4.1. Configuration

The controller consists of the main body and Teach Pendant.

Figure 4.1 Hi7-N**(U) Controller

Figure 4.2 Teach Pendant TP630

## 4.2. Placement of Parts

The main components of the Hi7-N00/N30/N80 controller and their individual names are shown below in Table 4-1 and are arranged as shown in Figure 4.3 to Figure 4.5.

Table 4-1 Names of Individual Parts of the Hi7-N00/N30/N80 Controller

| No. | Type | Part name |
|---|---|---|
| 1 | H6COM-T | Main control module |
| 2 | BD642 | Servo-safety board |
| 3 | BD604 | Backplane board |
| 4 | H7PSM | Power supply module |
| 5 | H7D6X(Large/Medium-sized) /H7D6A(Small-sized) | Drive module for Large/Medium/Small-sized 6 axes |
| 6 | H7D1X (Optional) | Drive module for 1 axis of 100A |
| 6-1 | H7D1Z (Optional) | Drive module for 1 axis of 50A |
| 7 | OP EM. SW. | Emergency switch on the controller panel |
| 8 | NFB | No fuse breaker |
| 9 | FAN2 | Drive module internal cooling fan |
| 10– 12 | FAN3~5 | Drive module external cooling fan |
| 13 | NFT1 | Line noise filter |
| 14 | RDR1 | Small/Medium/Large-sized regenerative discharge resistor (CE/UL certified article) |
| 15 | TR | Transformer for the input power for options |
| 16 | CMC1 | Motor drive power cable inlet connection |
| 17 | CMC2 | Motor drive power cable inlet connection (Small controllers without a CMC2 mounted) |
| 18 | AMC1(Option) | Inlet connector for the motor-driving power cable for options 1 |

| No. | Type | Part name |
|---|---|---|
| 19 | AMC2(Option) | Inlet connector for the motor-driving power cable for options 2 |
| 20 | CEC1 | Encoder communication cable inlet connection |
| 21 | AEC1 | Inlet connector for the motor encoder cable for options 1 |
| 22 | AEC2 | Inlet connector for the motor encoder cable for options 2 |
| 23 | CNRTP | Teach Pendant cable inlet connector |

Figure 4.3 Placement of Parts on the Front Exterior of the Hi7-N00(U)/N30(U)/N80(U) Controller

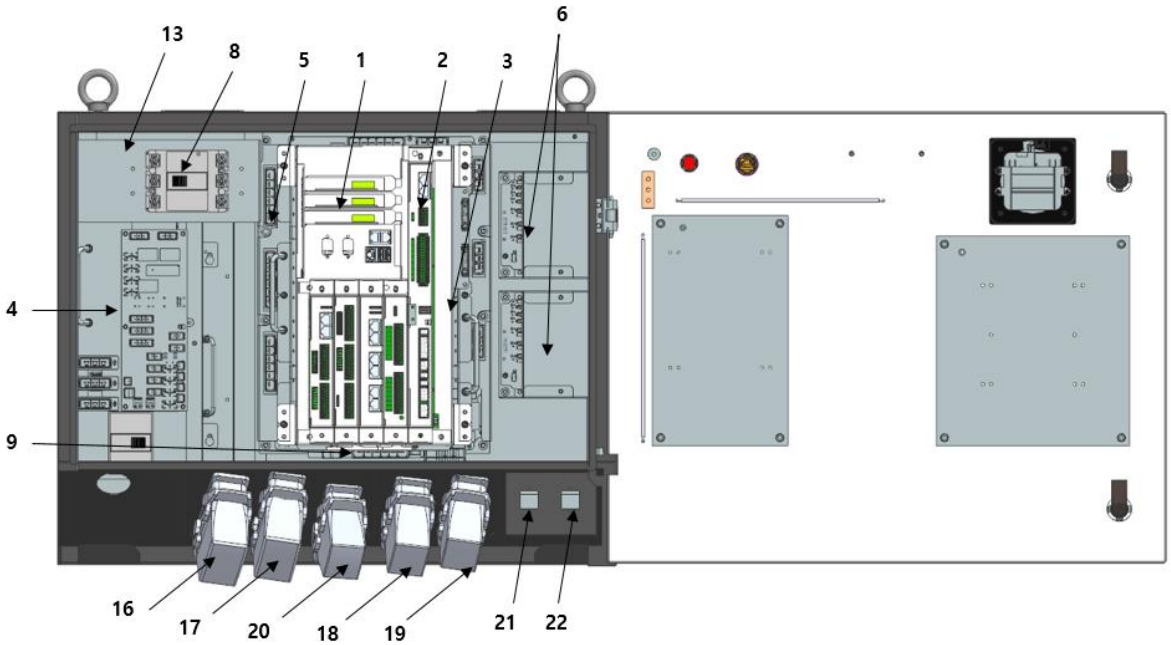


Figure 4.4 Placement of Parts on the Front Interior of the Hi7-N00(U)/N30(U)/N80(U) Controller

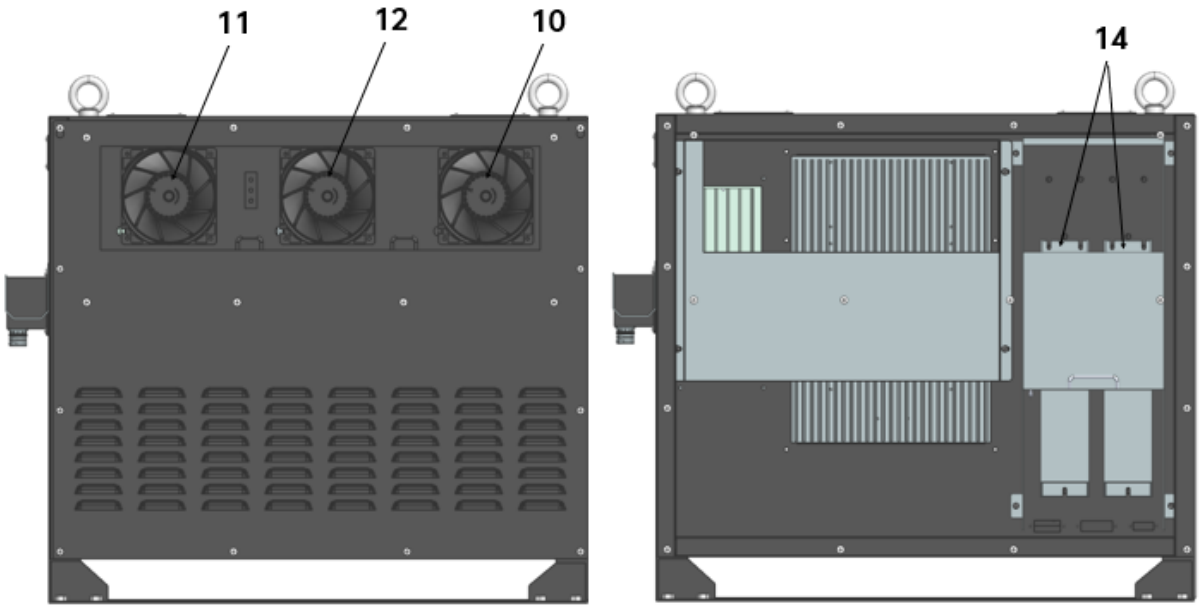


Figure 4.5 Placement of Parts on the Back of the Hi7-N00(U)/N30(U)/N80(U) Controller

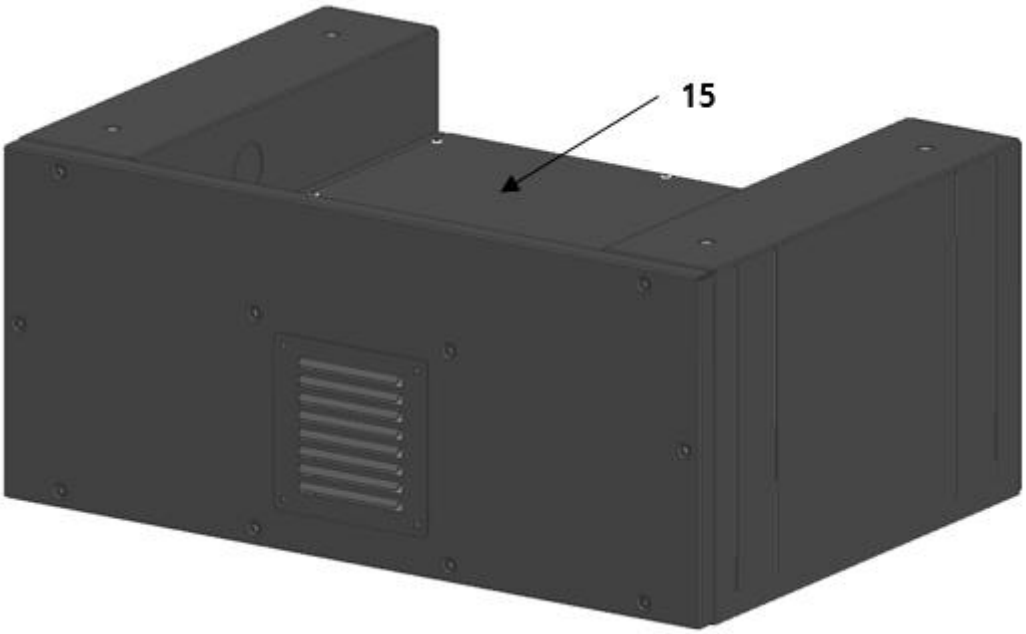


Figure 4.6 Hi7-N00(U),N30(u),N80(U) Controller Transformer Box

## 4.3. Functions of the Individual Components

Table 4-2 Summary of Functions of the Individual Components

| Components | | Functions |
|---|---|---|
| Control module | Main control module (H6COM-T) | ● Recording the record points and calculating the operation paths<br>● Preservation of the programs and robot integers<br>● Teach pendant (T/P) communication<br>● Connection of the LAN, USB, and the serial (RS232) communication |
| | Servo board (BD642) | ● DSP for servo control<br>● Encoder connection (Serial I/F)<br>● Open/close outputs for the servo motor<br>● Sequence control |
| | Safety module (BD604) | ● I/O in the controller (I/O for the system)<br>● Processing of various input signals from the manipulator<br>● Safety chain circuit |
| Drive module | Large/Medium-sized 6 axes: H7D6X<br>Small-sized 6 axes: H7D6A<br>Additional axis: H7D1X, H6D1Z | ● Generation of the motor drive power<br>● Regenerative discharge<br>● Servo motor power amplification circuit<br>● Various error outputs |
| T/P (Teach Pendant) | TP630 | ● Display of various information (LCD)<br>● Button inputs and switch inputs (function/jog, etc.)<br>● Emergency stop, enable, and T/P On/Off inputs |
| Cooling device | Fan | ● Air circulation inside the panel<br>● Cooling of the drive module |
| Power supply module | H7PSM | ● Opening/closing of the motor drive power<br>● Distribution of various power |

※ For the types of components of each controller, refer to “2.1 Details of Specifications of Each Controller Model.”

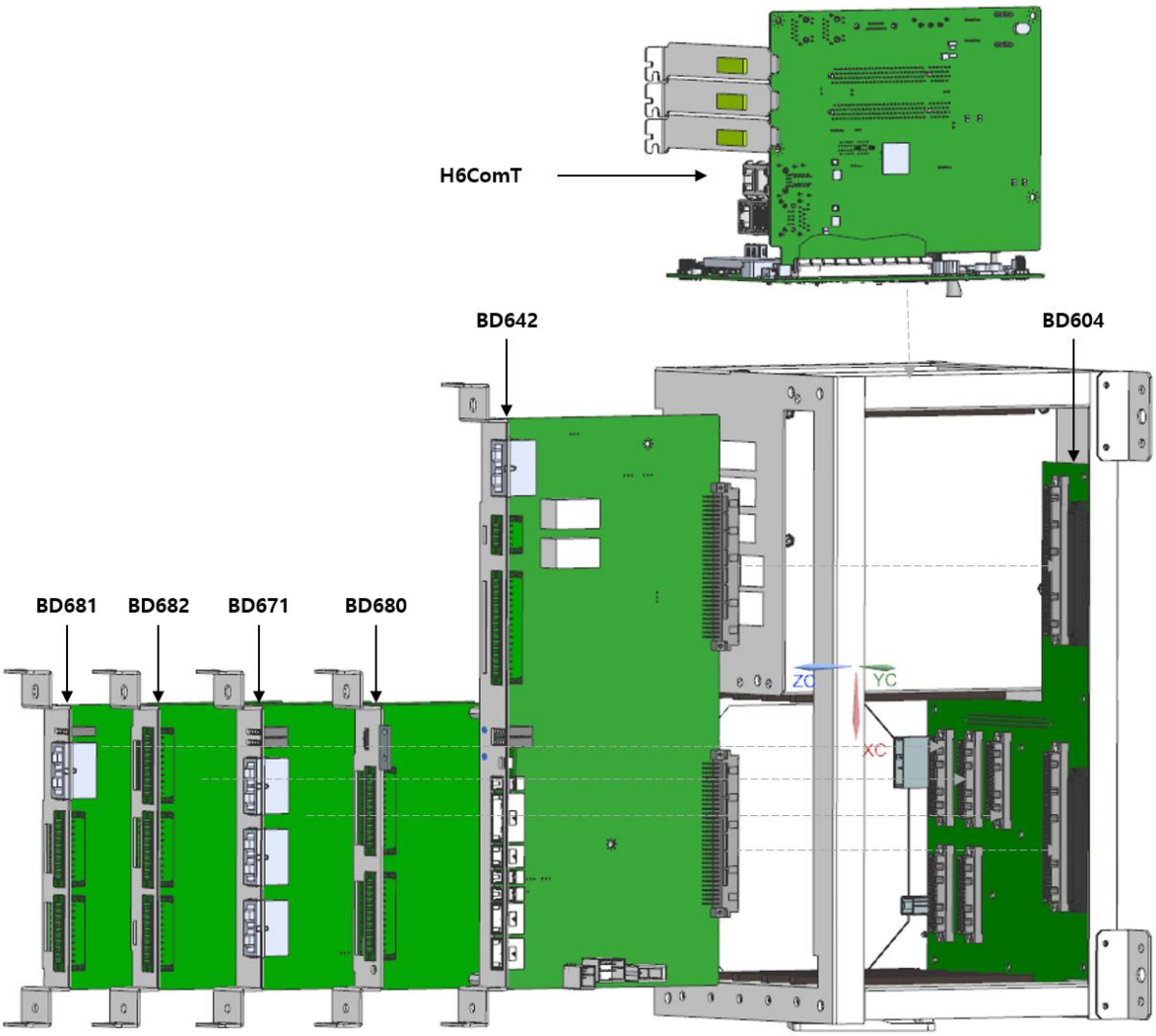


Figure 4.7 Components of the Control module

## 4.3.1. Main Module (H6COM-T)

### 4.3.1.1. Overview

H6COM-T is structure as shown in Figure 4.9, in which the main CPU board and the carrier board are combined. The main CPU board consists of an SSD slot, a CPU slot, a memory card slot, a USB port, a COM port, and a bus connector that is to be connected to the carrier board. The carrier board contains three LAN ports for external systems, two LAN ports for internal systems, two USB ports, one GPIO port, two PCI connectors, one PCI-e connector and one DC 24V power connector. The LAN ports for internal systems are used for EtherCAT communication, as well as for interface with the teach pendant, and the GPIO port is used to detect a power failure signal from the power system. The SB is used for debugging. One PCI expansion slot and three spare LAN ports for external systems are provided to support other universal bus interfaces. The connection to other communication interfaces than EtherCAT can be made via the relevant slots.

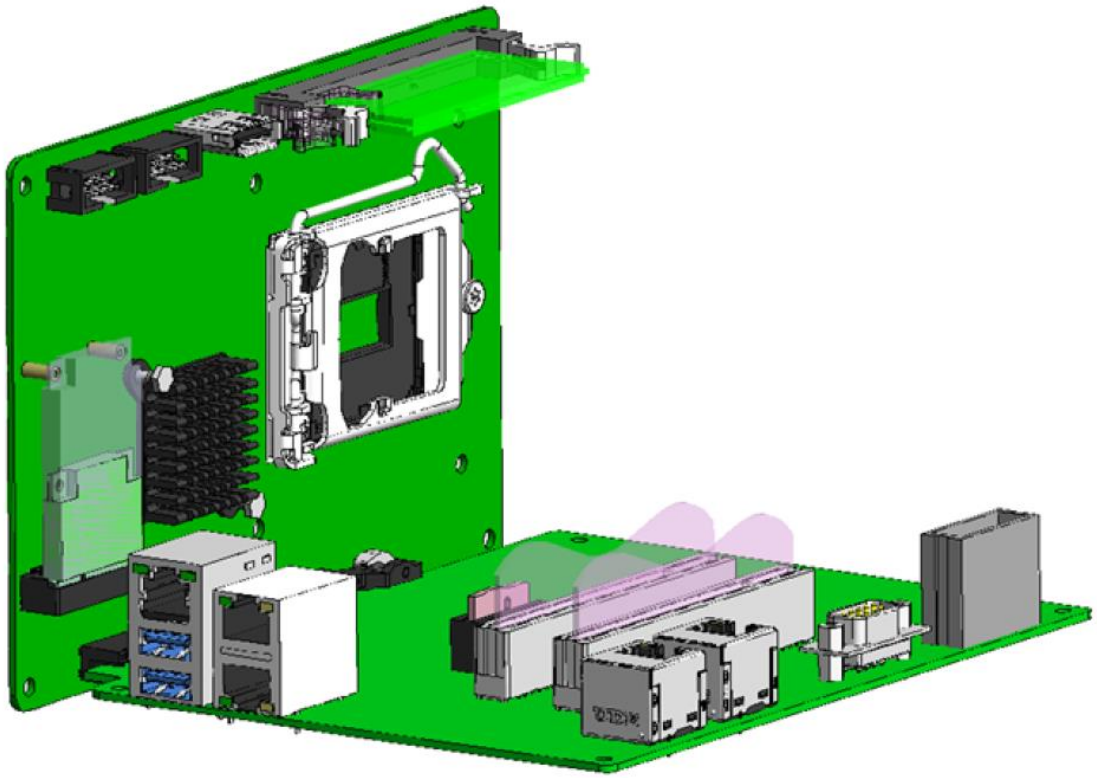

Figure 4.8 H6COM-T

#### 4.3.1.2. Connectors

Table 4-3 describes the usage of the connector and the connection of external devices.

Table 4-3 Types and Usage of the Connectors of Hi7COM-T

| Name | Usage | Connection of external devices |
|---|---|---|
| DC IN 12-24V | DC24V main power supply | - |
| COM 1,2 | Serial port (RS232/RS422/RS485) | - |
| GIO | Application of the power failure of the power unit | - |
| LAN 4 | EtherCAT master connector port | EtherCAT connector |
| LAN 5 | Ethernet port: For communication between teach pendants | TP connector |
| LAN 1 | Ethernet port: For the user (PC I/F) | Optional EtherCAT connector |
| LAN 2 | Ethernet port: For the user (PC I/F) | |
| LAN 3 | Ethernet port: For the user (PC I/F) | |
| PCI, PCIe | Optional expansion board slot | - |
| USB1,2 | USB port: For the user (PC I/F) | |

## 4.3.2. Safety Module (BD642)

### 4.3.2.1. Overview

For meeting the requirement of PLr=d cat3 (SIL2) in compliance with IOS 13849-1, the safety module (BD642) is designed in a dualized safety electric circuit and continuously monitors the status of safety-related inputs. If a system error or safety-related input is detected, this safety module renders the robot into a safe state by cutting off the motor power and brake power according to the classification of the stop types determined through risk assessment.

### 4.3.2.2. Connectors

The following figure shows the positions and usage of various connectors installed on BD642 (Safety IO Module).

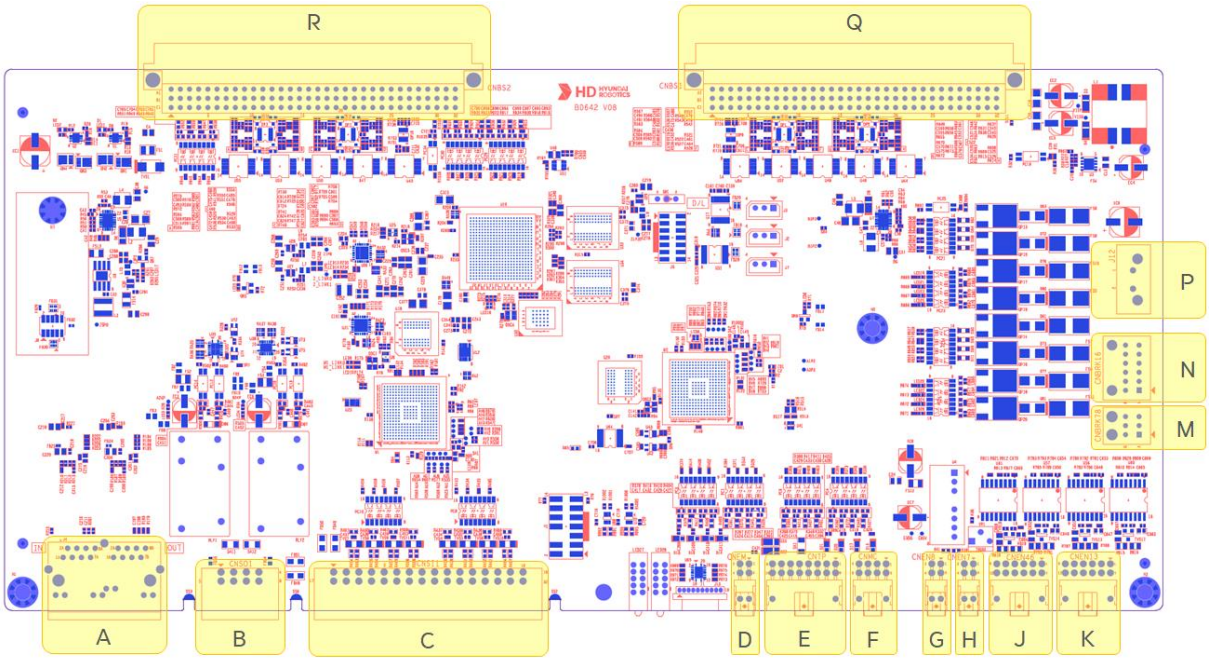


Figure 4.9 Placement of the Connectors and Switches of the BD642 (Safety IO Board)

Table 4-4 Types and Usage of the Connectors of the BD642 (Safety IO Board)

| No. | Name | Usage | Connection of external devices |
|---|---|---|---|
| A | J4 | EtherCAT communication | Hi6COM LAN4 |
| B | CNSO1 | Safety output terminal | External device |
| C | CNSI1 | Safety input terminal | External device |
| D | CNEM | External emergency switch | Emergency switch |
| E | CNTP | Teaching pendant (power, emergency stop, mode switch, enable switch) | Connector CNRTP |
| F | CNMC | Magnet contact input/output signals | Power distribution board (BD6C2) CNMC |
| G | CNEN8 | Encoder signal for additional axis 8 | Connector AEC2 |
| H | CNEN7 | Encoder signal for additional axis 7 | Connector AEC1 |
| J | CNEN46 | Encoder signal for axes 4–6 | Connector CEC1 |
| K | CNEN13 | Encoder signal for axes 1–3 | Connector CEC1 |
| M | CNBRK78 | Brake signal for additional axes 7 and 8 | Connectors AMC1 and AMC2 |
| N | CNBRK16 | Brake signal for axes 1–6 | Connectors CMC1 and CMC2 |
| P | J12 | Brake power | Power distribution board (BD6C2) CNOBK |
| Q | CNBS1 | Drive device interface signals | Backplane board (BD604) CNBS1 |
| R | CNBS2 | Drive device interface signals | Backplane board (BD604) CNBS2 |

| | |
|---|---|
| ⚠ Caution | When a safety-related input is connected and activated, you must check whether the function is operating normally by referring to “1.11 Safety Measures When Operating the Robot.” |

#### 4.3.2.3. Display Devices

(1) Top surface display of the board
The figure below shows the display devices (LED, 7-segment) on the servo/safety module (BD642). The table below describes the information of each display.

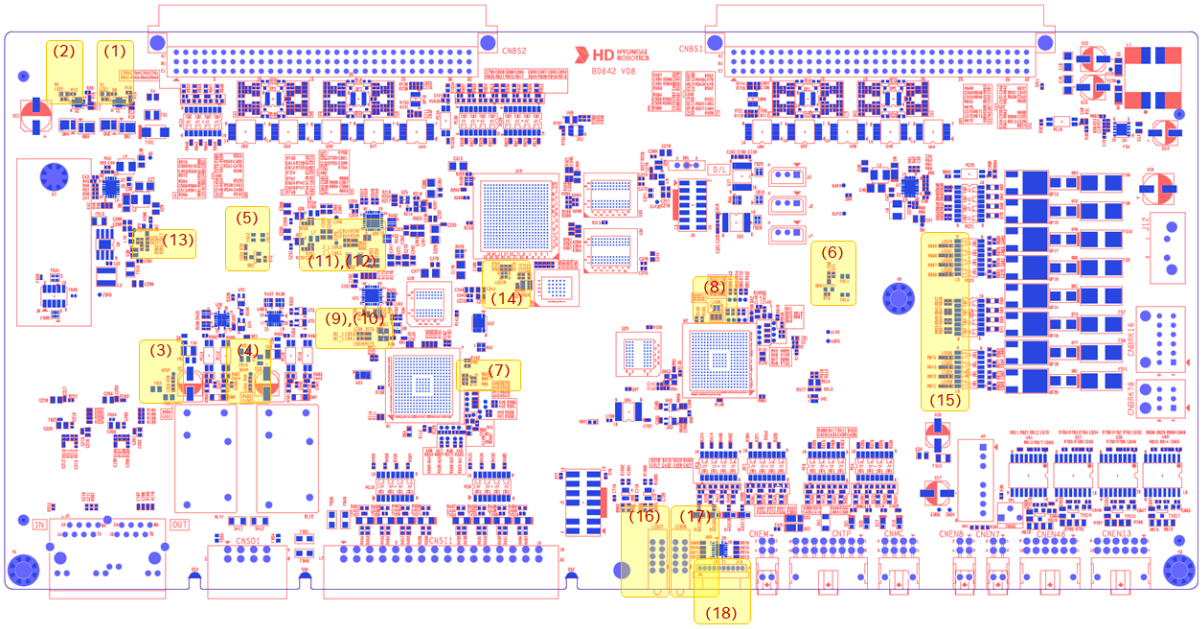


Figure 4.10 Top Board Display Layout of Servo/Safety Module (BD642)

Table 4-5 Top Board Display Description of Servo/Safety Module (BD642)

| Number | Name | Description | Color | Normal Condition | Actions against Abnormal Condition |
|---|---|---|---|---|---|
| (1)<br>(2) | LED1<br>LED2 | Input power limiting function | Red | OFF | Symptom: Red LED ON<br>Cause: Input voltage is under-voltage or over-voltage.<br>Action: Check the input voltage (24 V). |
| (3) | LED3 | External A channel power | Yellow | ON | Symptom: Yellow LED OFF<br>Cause: External A channel power has overcurrent or external wiring fails, etc.<br>Action: Check the fuse (FS2). |
| (4) | LED4 | External B channel power | Yellow | ON | Symptom: Yellow LED OFF<br>Cause: External B channel power has overcurrent and external wiring fails, etc. |

| | | | | | |
|---|---|---|---|---|---|
| | | | | | Action: Check the fuse (FS3). |
| (5) | LED5 | A channel MCU power | Yellow | ON | Symptom: Yellow LED OFF<br>Cause: A channel MCU power (3.3 V, 1.2 V) is abnormal.<br>Action: Replace the board (BD642). |
| (6) | LED6 | B channel MCU power | Yellow | ON | Symptom: Yellow LED OFF<br>Cause: B channel MCU power (3.3 V, 1.2 V) is abnormal.<br>Action: Replace the board (BD642). |
| (7) | LED7 | A channel MCU state display | Red<br>Green<br>Blue | RGB blink | Symptom: All LED OFF and no blinking<br>Cause 1: A channel MCU power (3.3 V, 1.2 V) is abnormal.<br>Cause 2: A channel MCU program error, etc. occurs.<br>Action: Replace the board (BD642). |
| (8) | LED8 | B channel MCU state display | Red<br>Green<br>Blue | RGB blink | Symptom: All LED OFF and no blinking<br>Cause 1: B channel MCU power (3.3 V, 1.2 V) is abnormal.<br>Cause 2: B channel MCU program error, etc. occurs.<br>Action: Replace the board (BD642). |
| (9)<br>(10) | LED9<br>LED10 | A channel MCU EtherCAT LINK0 state<br>A channel MCU EtherCAT LINK1 state | Green<br>Green | Green blink<br>Green blink | Symptom: No blinking<br>Cause: A channel MCU EtherCAT is abnormal.<br>Action: Replace the board (BD642). |
| (11)<br>(12) | LED13<br>LED14 | FPGA EtherCAT LINK0 state<br>FPGA EtherCAT LINK1 state | Green<br>Green | Green blink<br>Green blink | Symptom: No blinking<br>Cause: FPGA EtherCAT is abnormal.<br>Action: Replace the board (BD642). |
| (13) | LED17 | FPGA power state | Yellow | ON | Symptom: Yellow LED OFF<br>Cause: FPGA power (5 V, 3.3 V, 1.8 V, 1.35 V, and 1 V) is abnormal. |

| | | | | | |
|---|---|---|---|---|---|
| | | | | | Action: Replace the board (BD642). |
| (14) | LED18 | FPGA state display | Red<br>Green<br>Blue | RGB blink | Symptom: All LED OFF and no blinking<br>Cause 1: FPGA power (5 V, 3.3 V, 1.8 V, 1.35 V, and 1 V) is abnormal.<br>Cause 2: FPGA program error, etc. occurs.<br>Action: Replace the board (BD642). |
| (15) | LED19<br>LED21<br>LED23<br>LED25<br>LED20<br>LED22<br>LED24<br>LED26 | Axis 1 brake state<br>Axis 2 brake state<br>Axis 3 brake state<br>Axis 4 brake state<br>Axis 5 brake state<br>Axis 6 brake state<br>Axis 7 brake state<br>Axis 8 brake state | Orange | Brake release (ON)<br>Brake hold (OFF) | Symptom: Brake state mismatch<br>Cause 1: Brake power is abnormal.<br>Cause 2: Harness failure, etc. occurs.<br>Action: Replace the board (BD642). |
| (16)<br>(17)<br>(18) | LED27<br>LED28<br>SEG1 | Axis 1 brake state | | | Refer to the next front display device item |

(2) Front display device of the board

The figure below shows the front display device of the servo/safety module (BD642). The table below describes the information of each display.

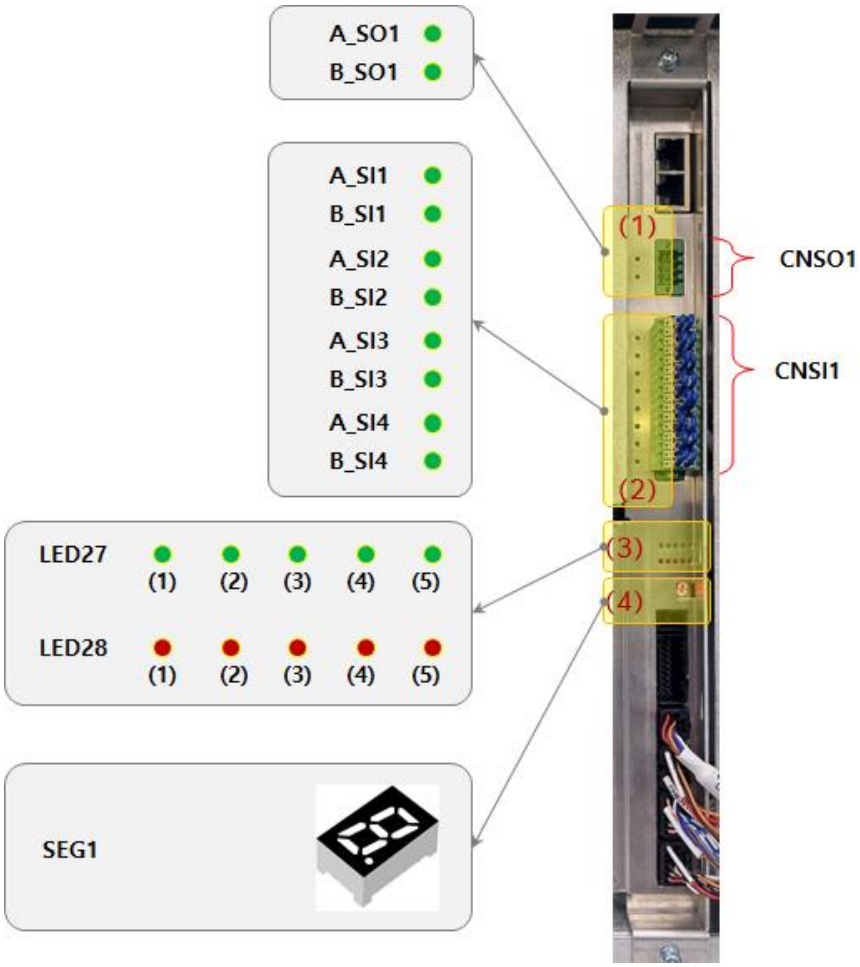


Figure 4.11 Front Display Layout of Servo/Safety Module (BD642)

Table 4-6 Front Display Description of Servo/Safety Module (BD642)

| No. | Name | Description | Color | Display State | Display Description |
|---|---|---|---|---|---|
| (1) | A_SO1 | A channel safety output 1 state | Green | ON | Each channel safety output 1 ON |
| | B_SO1 | B channel safety output 1 state | | OFF | Each channel safety output 1 OFF |
| (2) | A_SIx (x=1~4) | A channel safety input x state | Green | ON | Each channel safety input x ON |

| | | | | | |
|---|---|---|---|---|---|
| | B_SIn (n=1~4) | B channel safety input x state | | OFF | Each channel safety input x OFF |
| (3) | LED27 (1) | LED27 (1) display | Green | | LED27 (1) MCU_A MOD |
| | LED27 (2) | LED27 (2) display | | | LED27 (2) MCU_B MOD |
| | LED27 (3) | LED27 (3) display | | | LED27 (3) ZYNQ MOD |
| | LED27 (4) | LED27 (4) display | | | LED27 (4) DSP_RUN |
| | LED27 (5) | LED27 (5) display | | | LED27 (5) ZYNQ_RUN |
| | LED28 (1) | LED27 (1) display | Red | | LED28 (1) MCU_A STA |
| | LED28 (2) | LED27 (2) display | | | LED28 (1) MCU_B STA |
| | LED28 (3) | LED27 (3) display | | | LED28 (3) ZYNQ STA |
| | LED28 (4) | LED27 (4) display | | | LED28 (4) DSP ERR |
| | LED28 (5) | LED27 (5) display | | | LED28 (5) ZYNQ ERR |
| (4) | SEG1 | BD642 board state | Red | | Boot state |

Table 4-7 Front LED Description of Servo/Safety Module (BD642)

| LED | Color | Status | Description |
|---|---|---|---|
| MOD (Safety) | Green | OFF | Power_OFF |
| | | | INIT STATE |
| | | GREEN Blinks(2s) | WAIT_ROBOT_INFO |
| | | GREEN Blinks(1s) | WAIT_SAFE_PAFAMETER |
| | | GREEN Blinks(0.5s) | INIT_PARAMETER |
| | | On | OPERATING |
| STA (Safety) | Red | OFF | No error |
| | | RED Blinks(2s) | MAINTENANCE |
| | | RED Blinks(1s) | VIOLATION |
| | | ON | FAULT |
| MOD (Servo) | Green | OFF | Powe_OFF |
| | | GREEN Blinks(2s) | WAIT_DSP_BOOTING |
| | | GREEN Blinks(0.5s) | WAIT_ETHERCAT_COMMUNICATION |
| | | ON | OPERATING |
| STA (Servo) | Red | RED Blinnks(1s) | F/W Update |
| | | On | Error / Fault |
| | | OFF | Normal Operating |

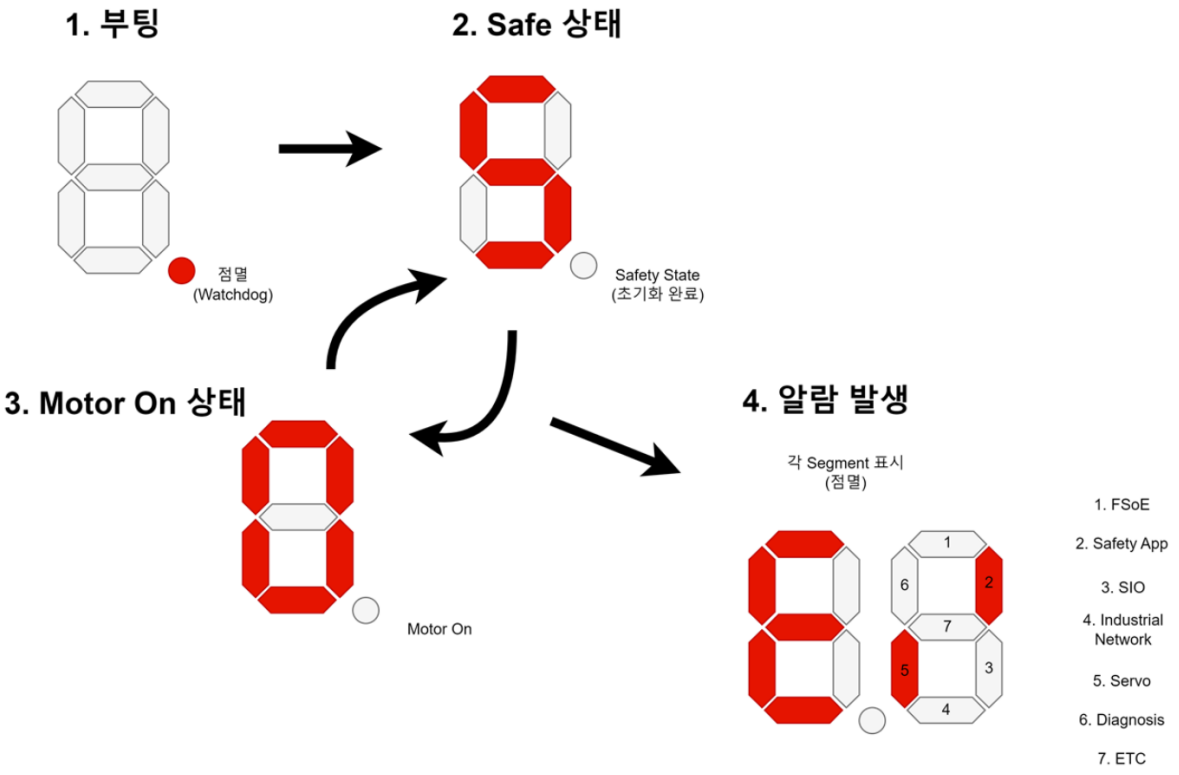


Figure 4.12 Segment State Display Description

#### 4.3.2.4. Setting Devices

The figure below shows the positions of the setting (switch) devices on the servo/safety module (BD642). The table below describes the purpose of each setting.

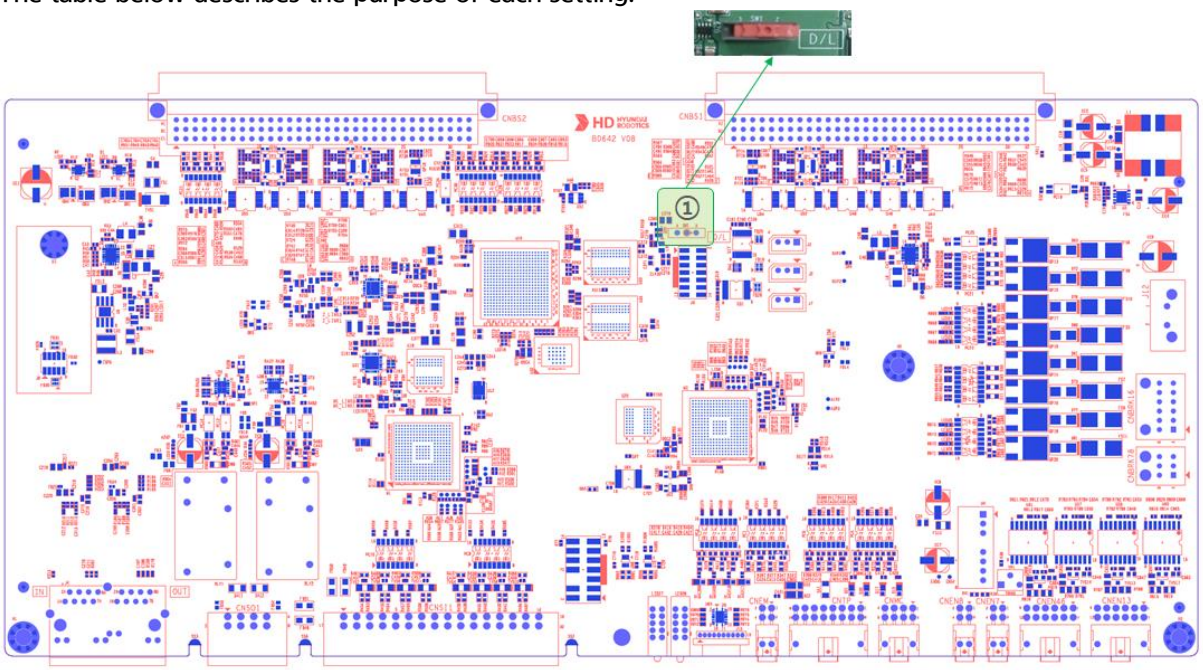


Figure 4.13 Description of the Setting Devices of the BD642 (Safety IO Board)

| ⚠ Warning | The following cannot be changed arbitrarily by the user and should only be referred to when FPGA JTAG reprogramming is required. |
|---|---|

Table 4-8 Description of the SW1 setting devices of BD642 (Safety IO Module)

| No. | Name | Setting State | Description | Remarks |
|---|---|---|---|---|
| ① | SW1 | | Flash memory boot mode | Factory default settings |
| | | 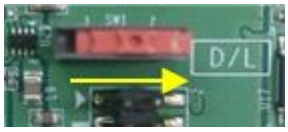 | JTAG program download mode | - |

#### 4.3.2.5. Safety Output Wiring

(1) External Emergency Stop of Contact Input Type

| | |
|---|---|
| ⚠ Warning | Before installing the external wiring, you must turn off the main power. |

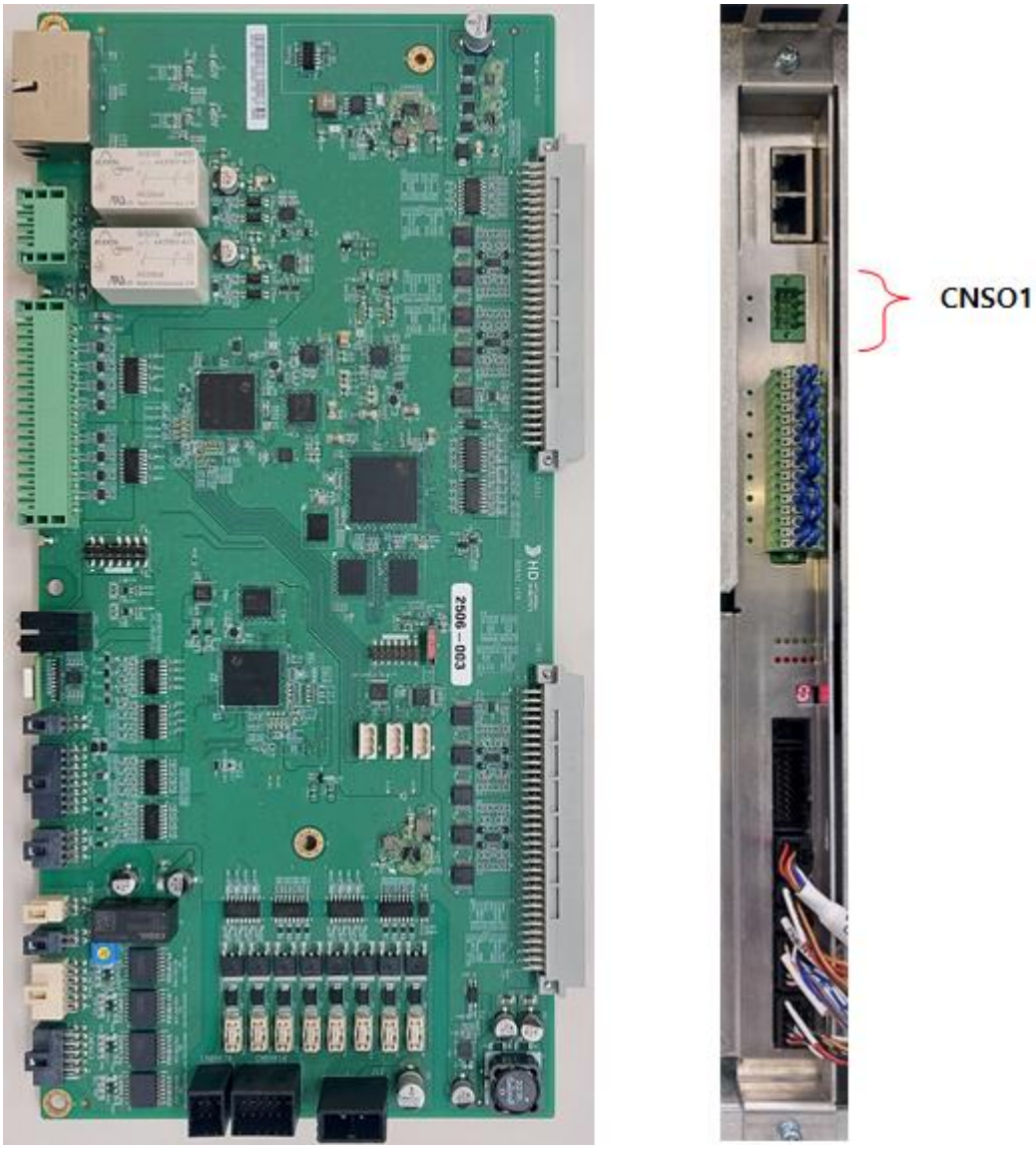


Figure 4.14 Actual Photo of Servo/Safety Module (BD642), and Position of Safety Output Connector (CNSO1)

The wiring of safety outputs differs depending on whether to use an internal power supply or an external power supply, and also according to the NPN/PNP type. The following shows the wiring for each case.

(1) When using the internal power supply

- NPN-TYPE(: Active Low)

In the figure below, red lines represent A channel and blue lines represent B channel.

When using the internal power of A channel, connect pins 1–2 of CNSO1 as shown in the figure below.

When using the internal power of B channel, connect pins 3–4 of CNSO1 as shown in the figure below.

For connection with external devices, refer to the wiring examples below:

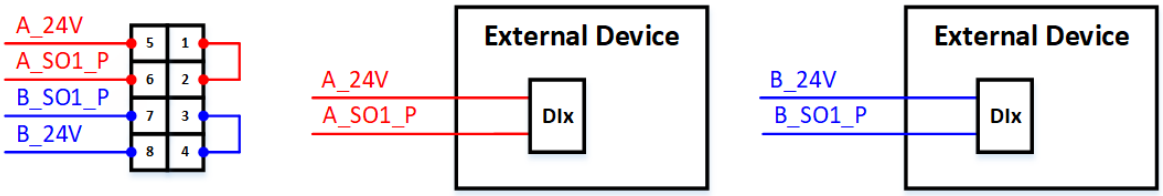


Figure 4.15 Safety Output Wiring with Internal Power Supply (NPN Type) for Servo/Safety Module (BD642)

- PNP-TYPE(: Active High)

In the figure below, red lines represent A channel and blue lines represent B channel.

When using the internal power of A channel, connect pins 5–6 of CNSO1 as shown in the figure below.

When using the internal power of B channel, connect pins 7–8 of CNSO2 as shown in the figure below.

For connection with external devices, refer to the wiring examples below:

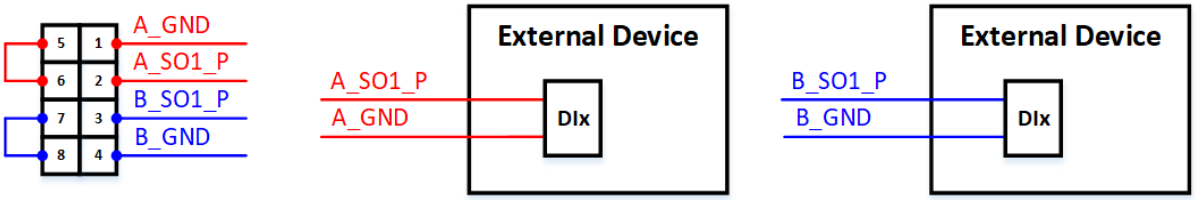


Figure 4.16 Safety Output Wiring with Internal Power Supply (PNP Type) for Servo/Safety Module (BD642)

(2) When using the external power supply

- NPN-TYPE(: Active Low)

In the figure below, red lines represent A channel and blue lines represent B channel.

Do not connect pins 1, 4, 5, and 8 of CNSO1.

When using the external power of A channel, connect EX_AG (GND) to pin 2 of CNSO1 as shown in the figure below.

When using the external power of B channel, connect EX_BG (GND) to pin 3 of CNSO1 as shown in the figure below.

For connection with external devices, refer to the wiring examples below

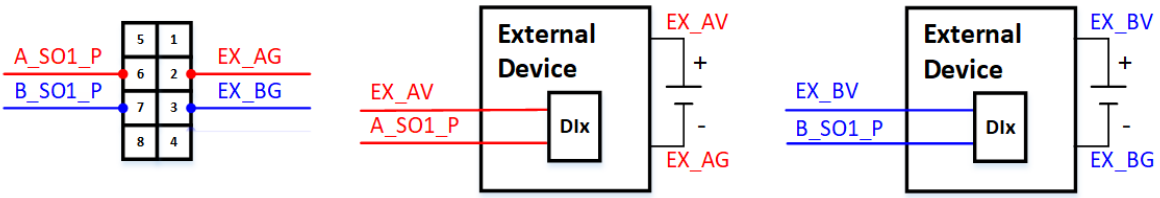


Figure 4.17 Safety Output Wiring with External Power Supply (NPN Type) for Servo/Safety Module (BD642)

- PNP-TYPE(: Active High)

In the figure below, red lines represent A channel and blue lines represent B channel.

When using the external power of A channel, connect EX_AV (24 V) to pin 2 of CNSO1 as shown in the figure below.

When using the external power of B channel, connect EX_BV (24 V) to pin 3 of CNSO1 as shown in the figure below.

For connection with external devices, refer to the wiring examples below:

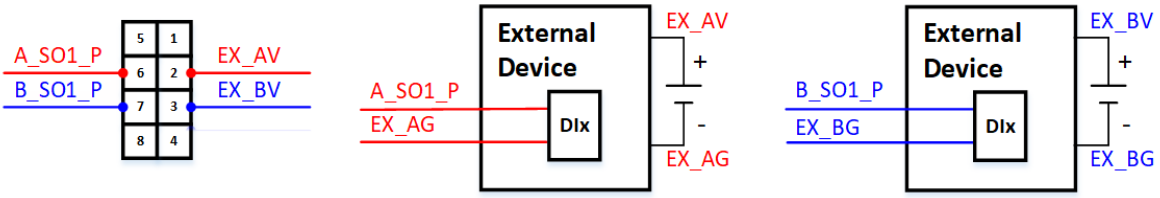


Figure 4.18 Safety Output Wiring with External Power Supply (PNP Type) for Servo/Safety Module (BD642)

#### 4.3.2.6. Safety Input Wiring

| ⚠ Warning | Before installing the external wiring, you must turn off the main power. |
|---|---|

The figure below shows the actual photo of the servo/safety module (BD642) and the position of the safety input connector (CNSI1) when viewed from the front during installation.

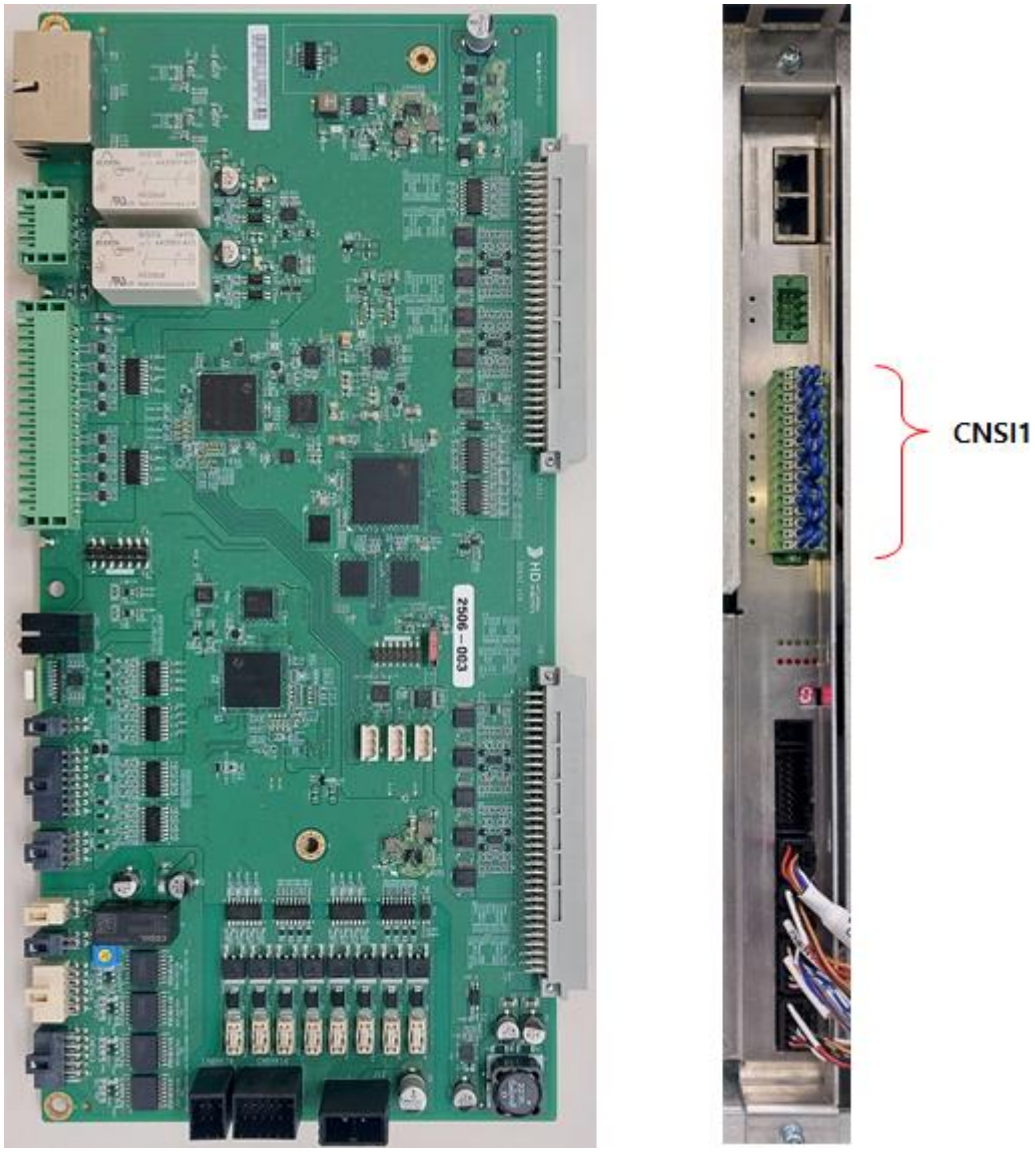


Figure 4.19 Actual Photo of Servo/Safety Module (BD642), and Position of Safety Input Connector (CNSI1)

(1) Factory setting of safety input (When not in use)
When safety input signals are not used, they should be connected in the default NC (Normal Close, B contact) configuration. The following shows the wiring when not in use (factory setting connection).

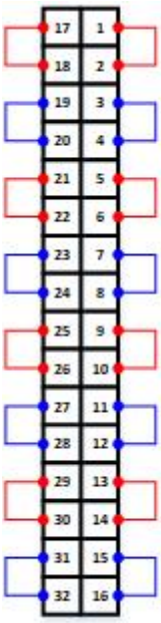


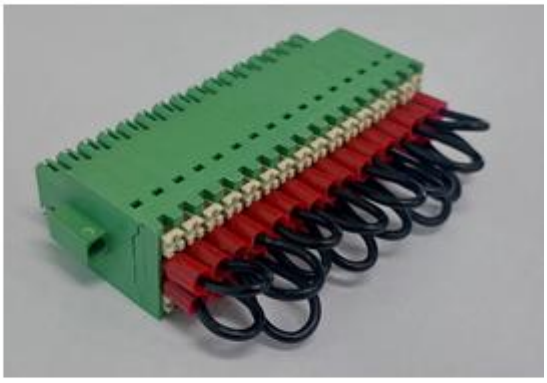

Figure 4.20 Safety Input Factory Setting of Servo/Safety Module (BD642)

The wiring of safety inputs differs depending on whether to use an internal power supply or an external power supply, and also according to the NPN/PNP type. The following shows the wiring for each case.

(2) When using the internal power supply
- NPN-TYPE(: Active Low)

In the figure below, red lines represent A channel and blue lines represent B channel.
When using the internal power of A channel, connect pins 17–18, 21–22, 25–26, and 29–30 of the channel's CNSI1 as shown in the figure below.
When using the internal power of B channel, connect pins 19–20, 23–24, 27–28, and 31–32 of the channel's CNSI1 as shown in the figure below.
For connection with external devices, refer to the wiring examples below:

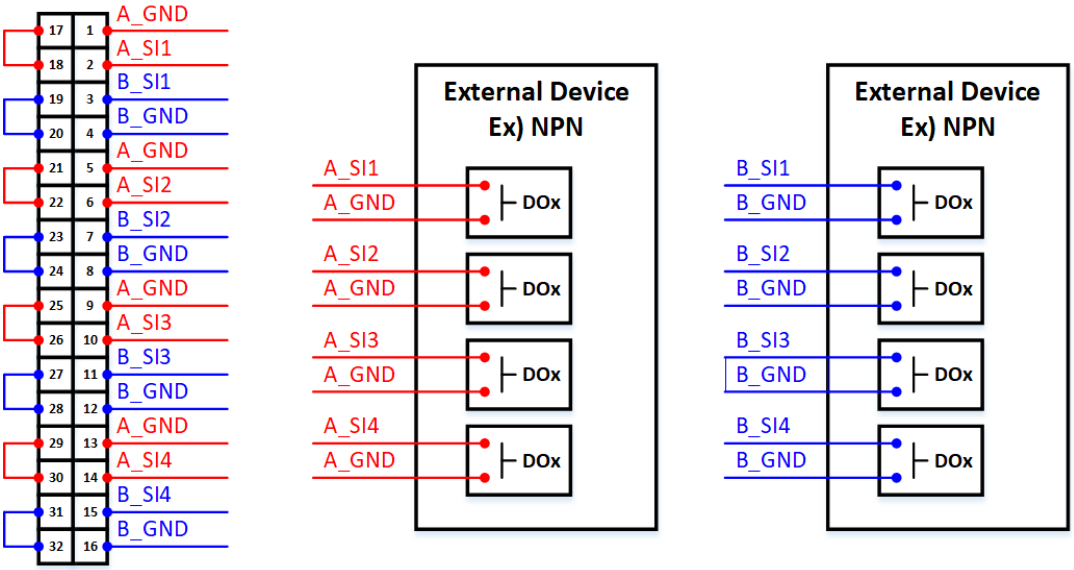


Figure 4.21 Safety Input Wiring with Internal Power Supply (NPN Type) for Servo/Safety Module (BD642)

- PNP-TYPE(: Active High)

In the figure below, red lines represent A channel and blue lines represent B channel.

When using the internal power of A channel, connect pins 1–2, 5–6, 9–10, and 13–14 of the channel's CNSI1 as shown in the figure below.

When using the internal power of B channel, connect pins 3–4, 7–8, 11–12, and 15–16 of the channel's CNSI1 as shown in the figure below.

For connection with external devices, refer to the wiring examples below

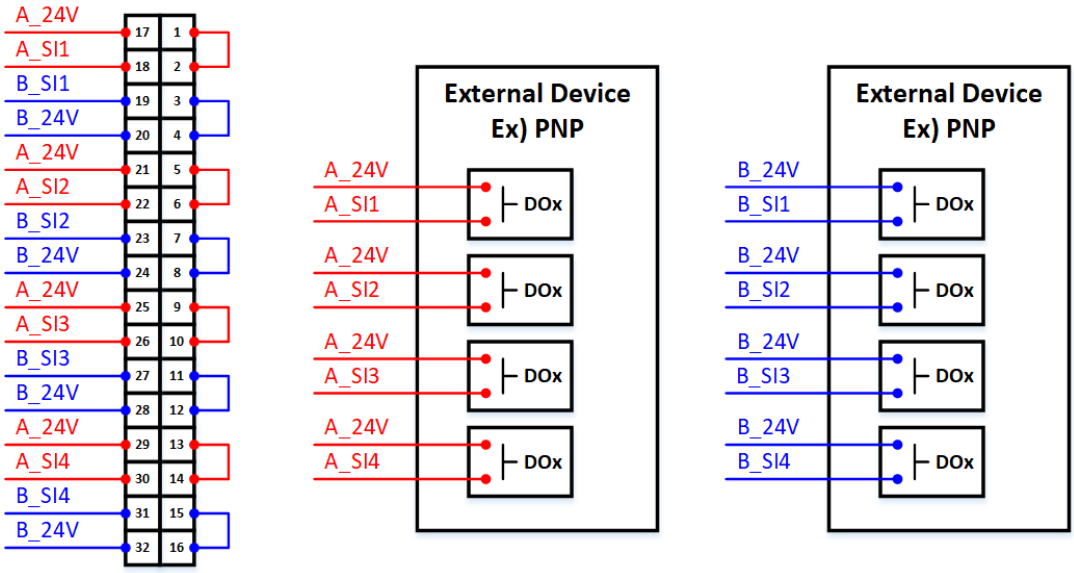


Figure 4.22 Safety Input Wiring with Internal Power Supply (PNP Type) for Servo/Safety Module (BD642)

| Warning | When connecting the internal power supply to external devices, do not use it as the power source for them. |
|---|---|

(3) When using the external power supply

● NPN-TYPE(: Active Low)

In the figure below, red lines represent A channel and blue lines represent B channel.

When using the external power of A channel, do not connect pins 1, 17, 5, 21, 9, 25, 13, and 29 of CNSI1.

When using the external power of B channel, do not connect pins 4, 20, 8, 24, 12, 28, 16, and 32 of CNSI1.

For connection with external devices, refer to the wiring examples below:

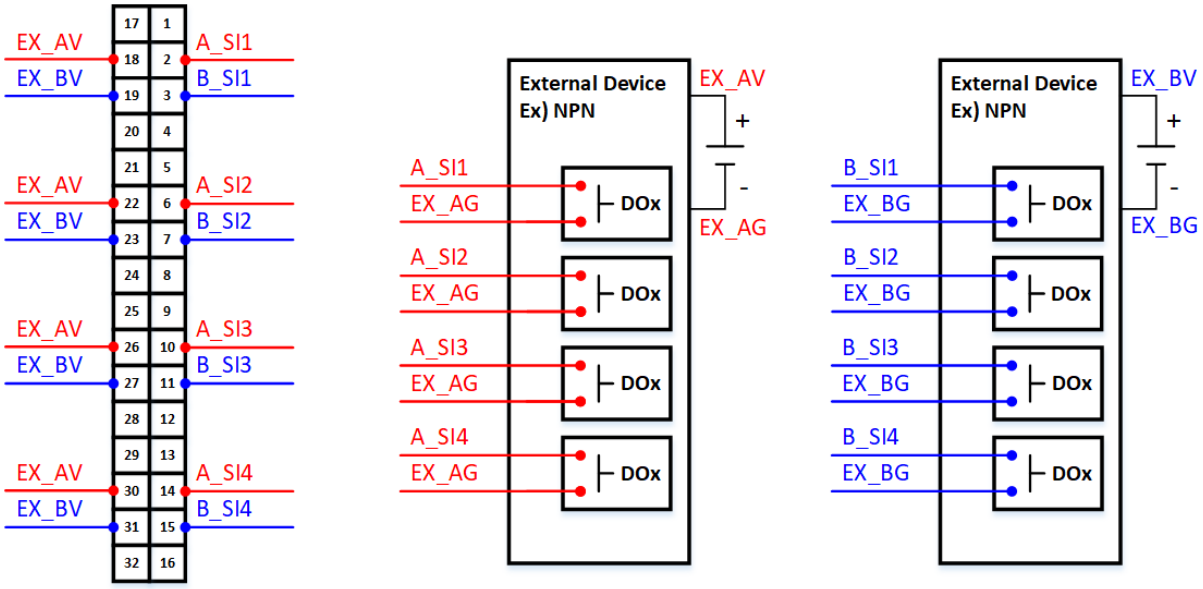


Figure 4.23 Safety Input Wiring with External Power Supply (NPN Type) for Servo/Safety Module (BD642)

● PNP-TYPE(: Active High)

In the figure below, red lines represent A channel and blue lines represent B channel.

When using the external power of A channel, do not connect pins 1, 17, 5, 21, 9, 25, 13, and 29 of CNSI1.

When using the external power of B channel, do not connect pins 4, 20, 8, 24, 12, 28, 16, and 32 of CNSI1.

For connection with external devices, refer to the wiring examples below:

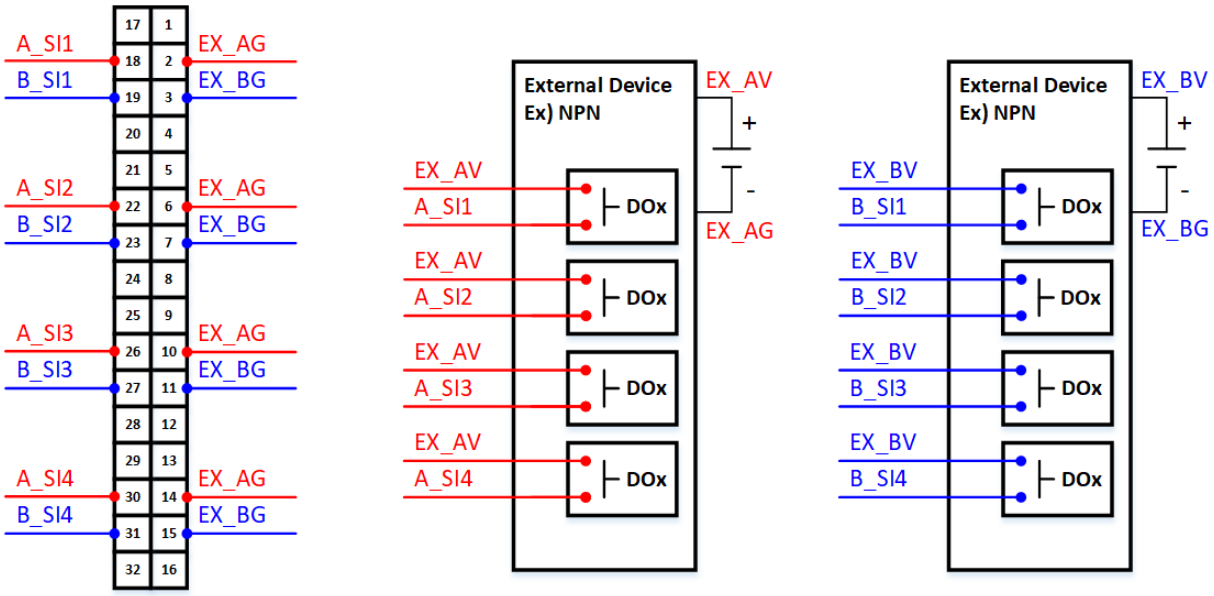


Figure 4.24 Safety Input Wiring with External Power Supply (PNP Type) for Servo/Safety Module (BD642)

## 4.3.3. Backplane Board (BD604)

### 4.3.3.1. Overview

The backplane board (BD604), as shown in Figure 4.50, supplies control power to Hi6a boards and transmits AMP-related signals generated from BD642 through the AMP interface board (BD652/BD654). It also serves to mount major optional boards and transmit signals between them.

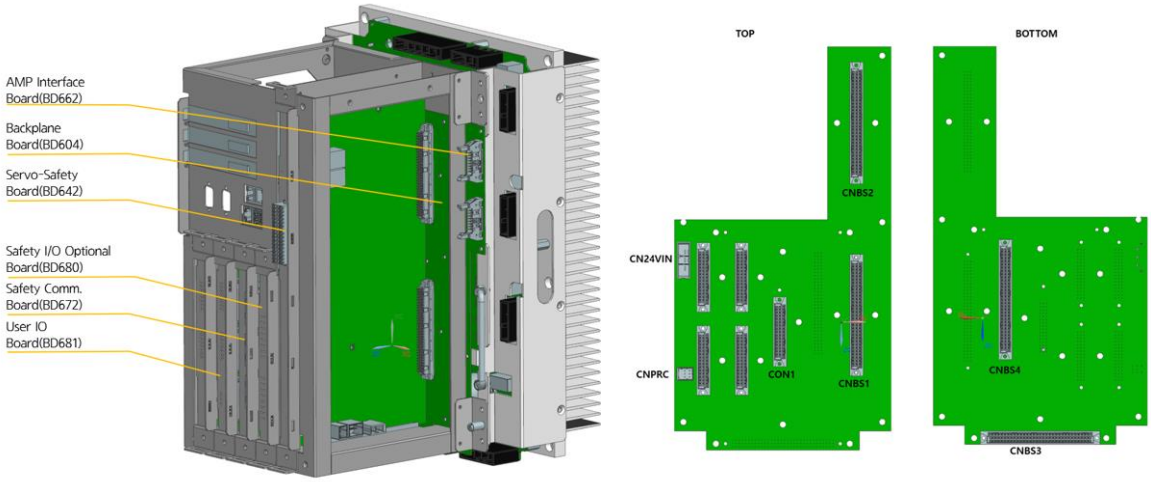


Figure 4.25 Backplane Board Structure

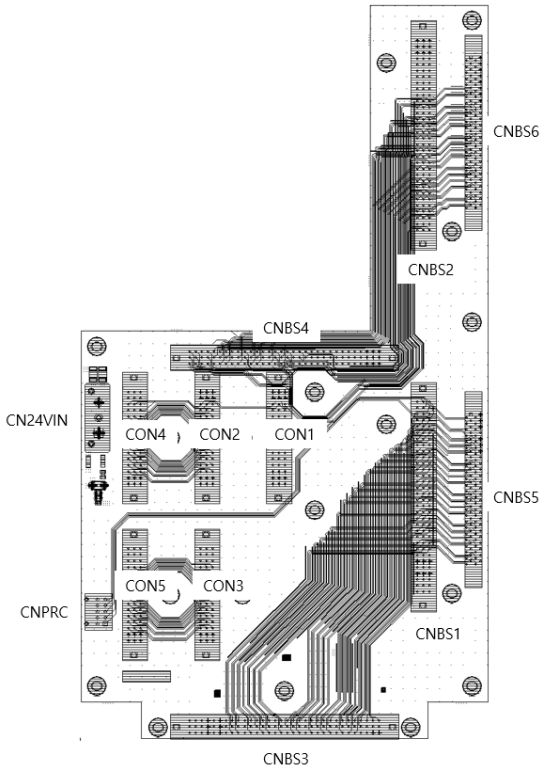


Figure 4.26 Backplane Board Connectors

#### 4.3.3.2. Connectors

Table 4-9 below describes the function of each connector and its connection to external devices.

Table 4-9 Types and Functions of Backplane Board Connectors

| Name | Function | External Device Connection |
|---|---|---|
| CN24VIN | DC 24 V main power supply | CNOCM connector on the power distribution board (BD6C3) |
| CNPRC | Precharge relay and fan relay control and monitoring | CNPRC connector on the power distribution board (BD6C3) |
| CNBS1, CNBS2 | Power and signal connector for servo safety board (BD642) | CNBS1 and CNBS2 connectors on servo safety board (BD632) |
| CNBS3, CNBS4 | Power and signal connector for AMP interface board (BD652/BD654) | CNBS1 and CNBS2 connectors on AMP interface board (BD652/BD654) |
| CNBS5, CNBS6 | Power and signal cable connector for AMP interface board (BD652/BD654) | - |
| CON1 | Power and signal connector for safety communication board (BD671) | CN1 connector on safety communication board (BD671) |
| CON2, CON3 | Power and signal connector for user IO board (BD681) | CN3 and CN4 connectors on user IO board (BD681) |
| CON4, CON5 | Power and signal connector for user IO expansion board (BD682) | CN4 and CN5 connectors on user IO expansion board (BD682) |

The above connector configuration is shown in Figure 4.27.

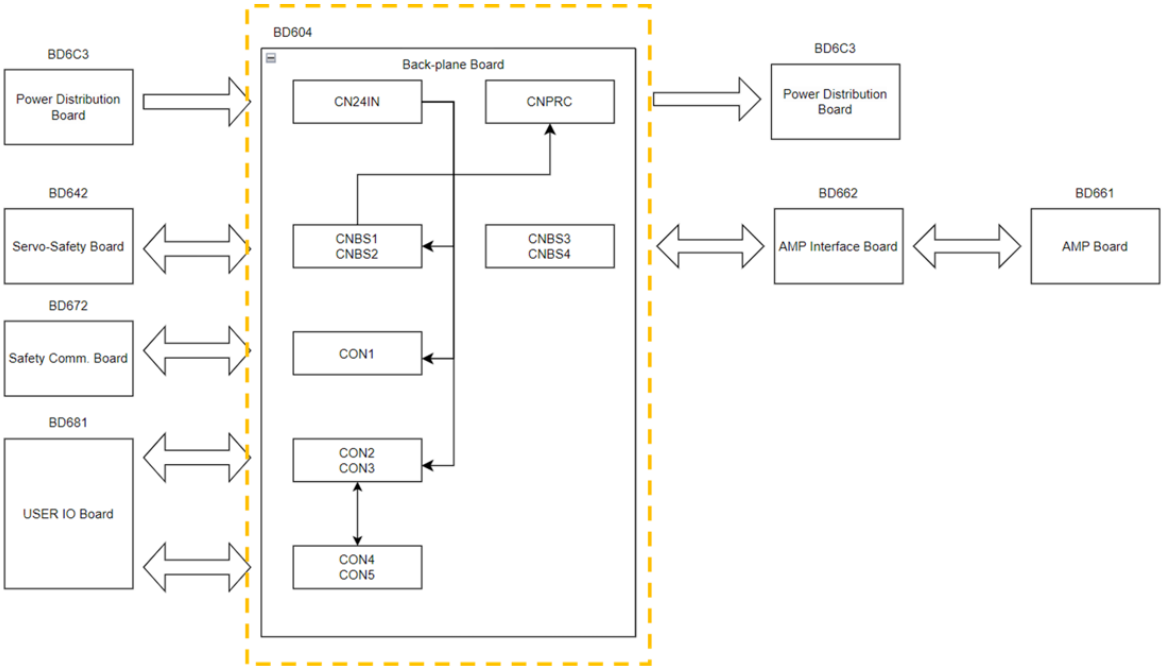


Figure 4.27 Connector Configuration of Backplane Board

## 4.3.4. Drive Module

### 4.3.4.1. H7D6X (Medium-Sized 6 Axes Integrated Drive Module)

The drive module performs a power amplification function that allows the current to flow to the individual phases of the motor according to the current command from the servo board. The six axes integrated drive module can drive six motors at the same time and is configured as follows.

The three-phase current entered from the power supply module is rectified through a diode module and then converted into direct current and stored in a smoothing capacitor. When the motor speed of the robot is decelerated, the electric power generated from the motor will be consumed through IGBT and resistors. The relevant configuration is as follows.

Table 4-10 Configuration of H6D6X (Medium-Sized 6 Axes Integrated Drive Module)

| Components | | Functions |
|---|---|---|
| BD651 (Power board) | Gate drive circuit | Transmit the IPM gate signal |
| | Gate power module | Generates the IPM gate power |
| | Current detection part | Detects the current that flows through the motor |
| | Regenerative control | Drives the IGBT when the PN voltage rises |
| | Error detection part | Detects the PN overvoltage, regenerative discharge resistor overheating, and PN undervoltage errors |
| | High voltage capacitor | Smooths the direct current |
| BD652 (Interface board) | Sequence interlocking part | Interlocks between the sequence status and the servo on signal |
| | Dedicated IO Terminal Blocks | Reserved IO port unit inside the controller |
| Other parts | Heat sink | Releases the heat generated from power elements to the outside |
| | Rectification part | Rectify the AC input power to generate DC power for driving the motor |
| | Regenerative IGBT | Performs regenerative discharge |
| | IPM | Convert the power for driving a three-phase motor |

■ Configuration of the Type Number of the Medium-Sized 6 Axes Integrated Drive Module

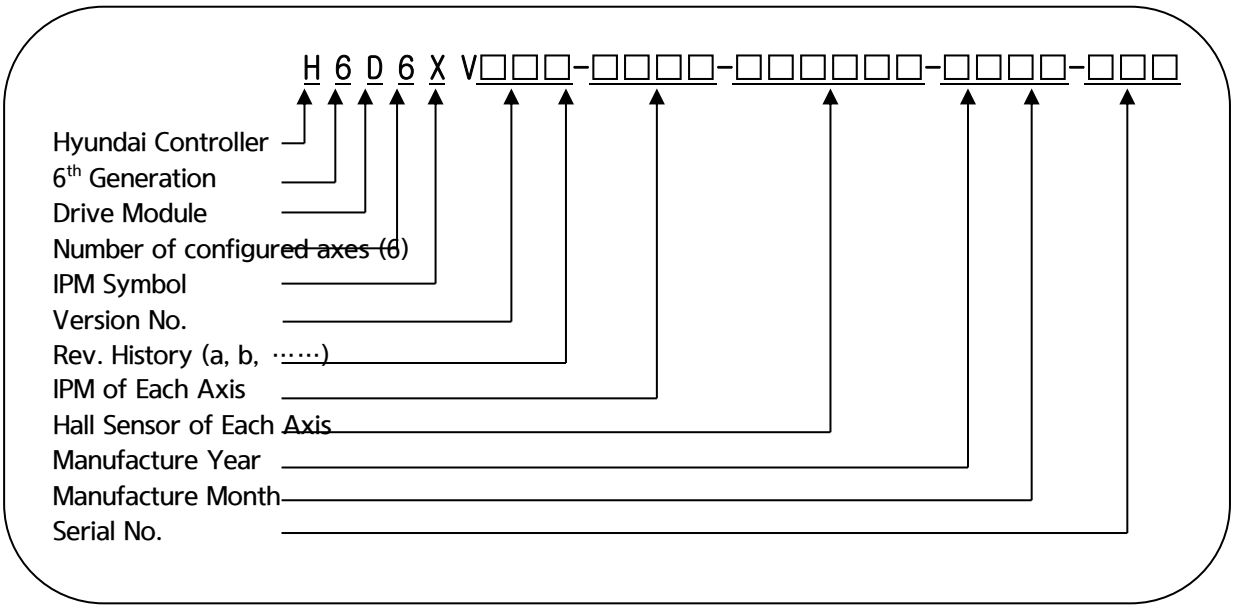


Table 4-11 Type Symbol of the Medium-Sized 6 Axes Integrated Drive Module

| Category | Type symbol |
|---|---|
| Hi7 Medium-Sized 6 Axes drive module | H7D6X |

Table 4-12 Specification of the Medium-Sized 6 Axes Integrated Drive Module

| Configuration | Classification | | Application | |
|---|---|---|---|---|
| IPM capacity | 3X | 3Y | HS180, HS220, HH300, HH050 | 6 axes integrated |
| | 4X | 2Y | HC2502B2D, HC2503B2D | |
| Year | 00~99 | | Production year: 2000~2099 | |
| Month | 01~12 | | Production month: January~December | |
| Serial No. | 001~999 | | Number of units produced monthly: 1~999 | |

Table 4-13 Symbols of the IPM of the medium-sized 6 axes drive module

| Drive Model | IPM symbol | IPM Specification |
|---|---|---|
| Drive module of the medium-sized 6 axes | X | (IPM current rating) 100A |
| | Y | (IPM current rating) 75A |
| | Z | (IPM current rating) 50A |

Table 4-14 Symbols of the Hall Sensors of the medium-sized 6 axes drive module

| Drive model | Hall sensor symbol (Specification) | Full-scale current (Im) | IPM specification (Rated current) |
|---|---|---|---|
| Drive module of the medium-sized 6 axes | 1 (4V/50A) | 93.75 Apeak | PM100CG1APL065 202G (100A)<br>PM75CG1APL065 202G (75A)<br>PM50CG1APL065 202G (50A) |
| | 2 (4V/25A) | 46.87 Apeak | |
| | 3 (4V/15A) | 28.12 Apeak | |
| | 4 (4V/10A) | 18.75 Apeak | |
| | 5 (4V/ 5A) | 9.37 Apeak | |

| | |
|---|---|
| ⚠ Caution | The drive module differs depending on the type of the robot, so you must check the type when replacing it. |

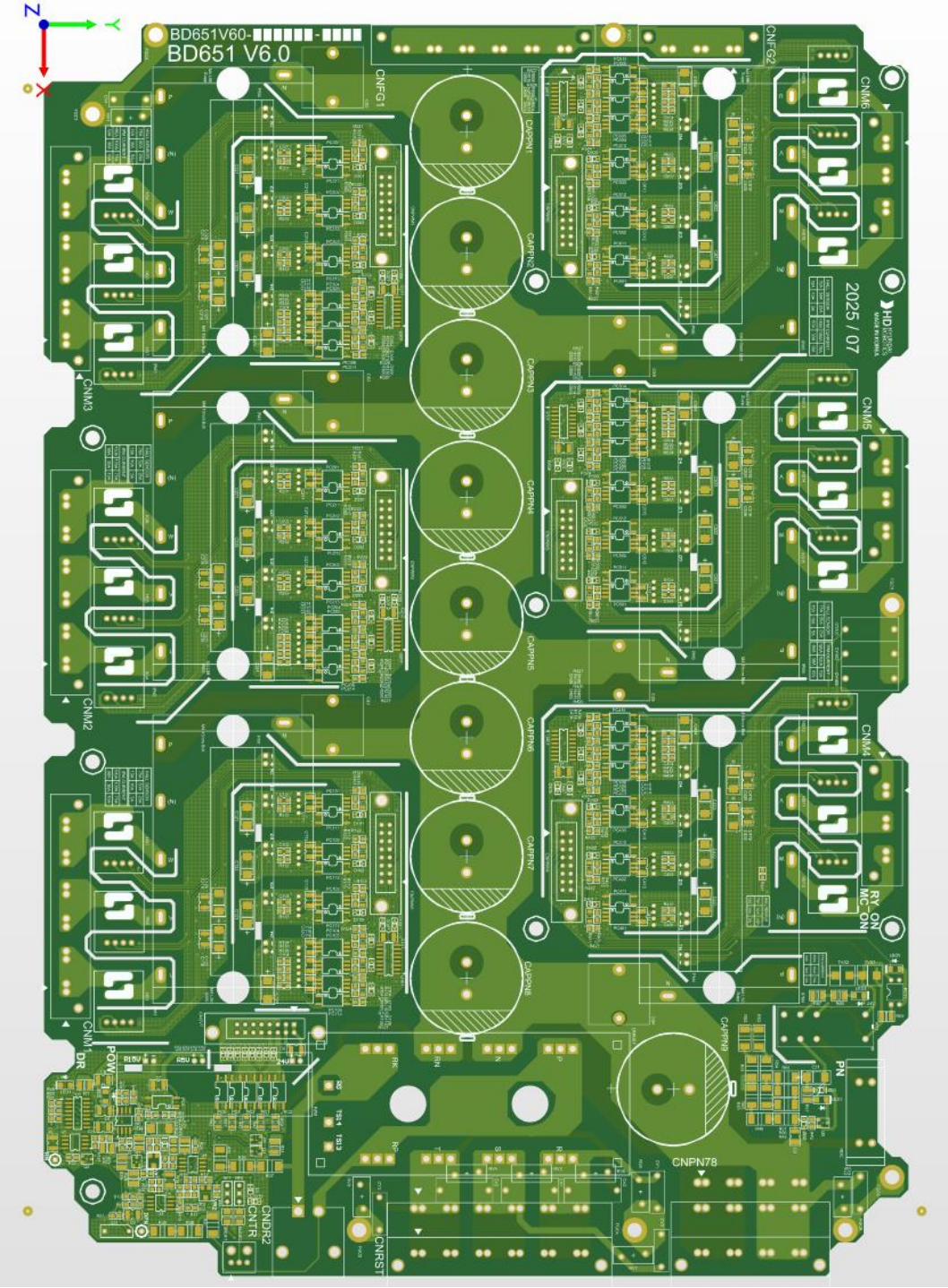
BD651V60-
BD651 V6.0
CNFG2
CNM6
CNM5
CNM4
RY_ON
MC_ON
2025 / 07
CNFG1
CAPPN1
CAPPN2
CAPPN3
CAPPN4
CAPPN5
CAPPN6
CAPPN7
CAPPN8
CAPPN9
CNM3
CNM2
CNM1
DR
POW
CNDR2
CNTR
CNRST
CNPN78
PN

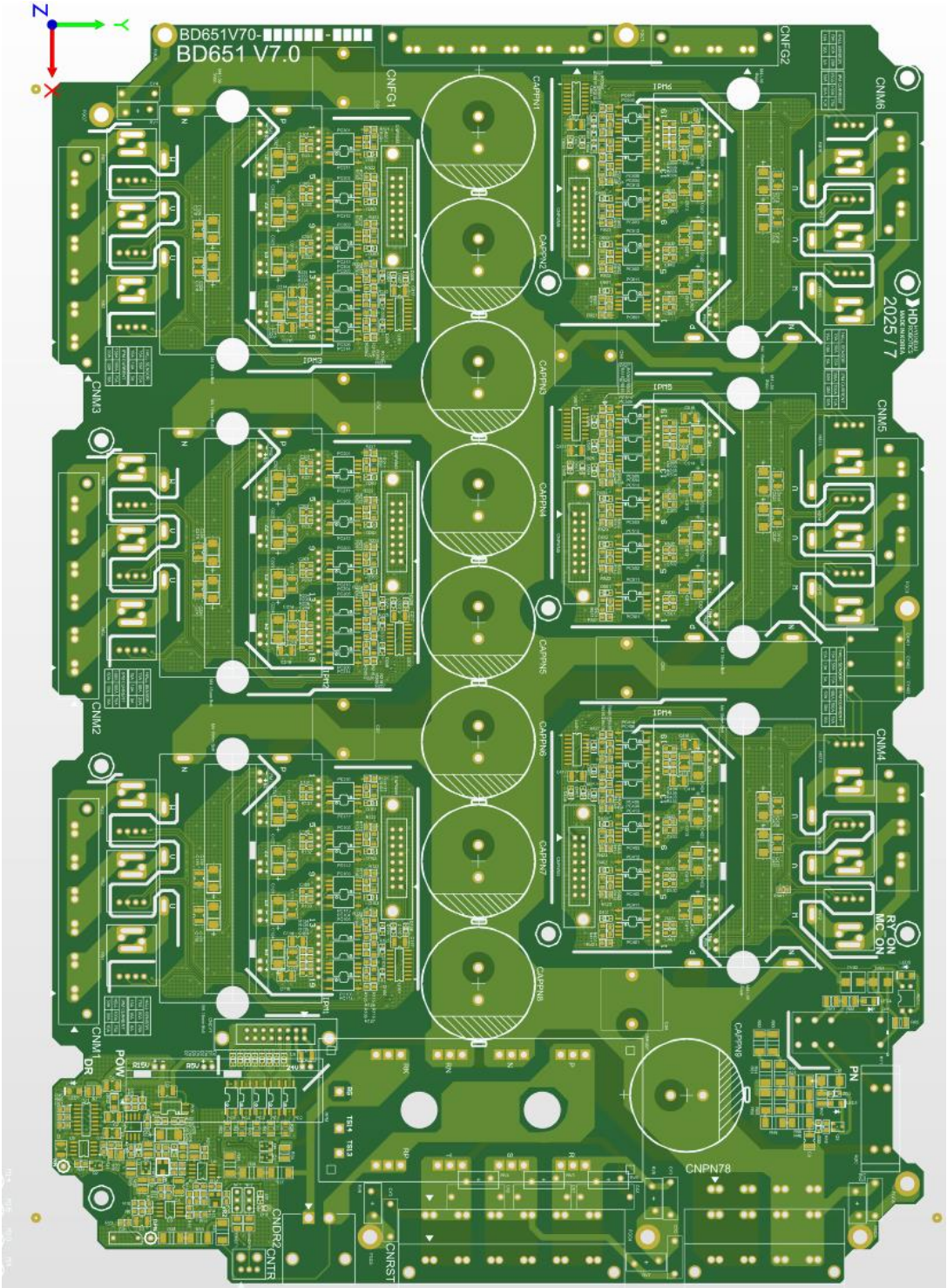


Figure 4.28 Component Layout of BD651V60 and BD651V70

Table 4-15 Description of the Connectors of BD651

| Name | Usage | Connection of external devices |
|---|---|---|

| | | |
|---|---|---|
| CNPWM1-6 | PWM signals and IPM error signals | Board-to-board connectors of the BD652 |
| CNRST | 3-phase power input | CNRST for the electronic module |
| CNCVT | Converter part error signal | Board-to-board connectors of the BD652 |
| CNDR | Regenerative discharge power output | Regenerative discharge resistor |
| CNTR | Regenerative discharge resistor overheating detection | Regenerative discharge resistor temperature sensor |
| CNM1~3 | Motor drive output for axis 1 to axis 3 | CMC1 |
| CNM4~6 | Motor drive output for axis 4 to axis 6 | CMC2 |
| CNPN7~8 | Direct current power for the drive module of the additional axis | CNPN for the drive module for an optional additional axis. |
| CNFG1 | Frame ground for axis 1 to axis 3 | CMC1 |
| CNFG2 | Frame ground for axis 4 to axis 6 | CMC2 |

Table 4-16 Description of LEDs of BD651

| Name | Color | Status Display |
|---|---|---|
| MC ON | Yellow | Will be turned on when the magnet contact is driving |
| POW | Green | Will be turned on when the control voltage of the converter part is normal |
| DR | Red | Will be turned on the regenerative discharge is operating |
| PN | Red | Will be turned on when the PN voltage is higher than 42V |
| RYON | Red | Will be turned off when the PN discharge is operating |

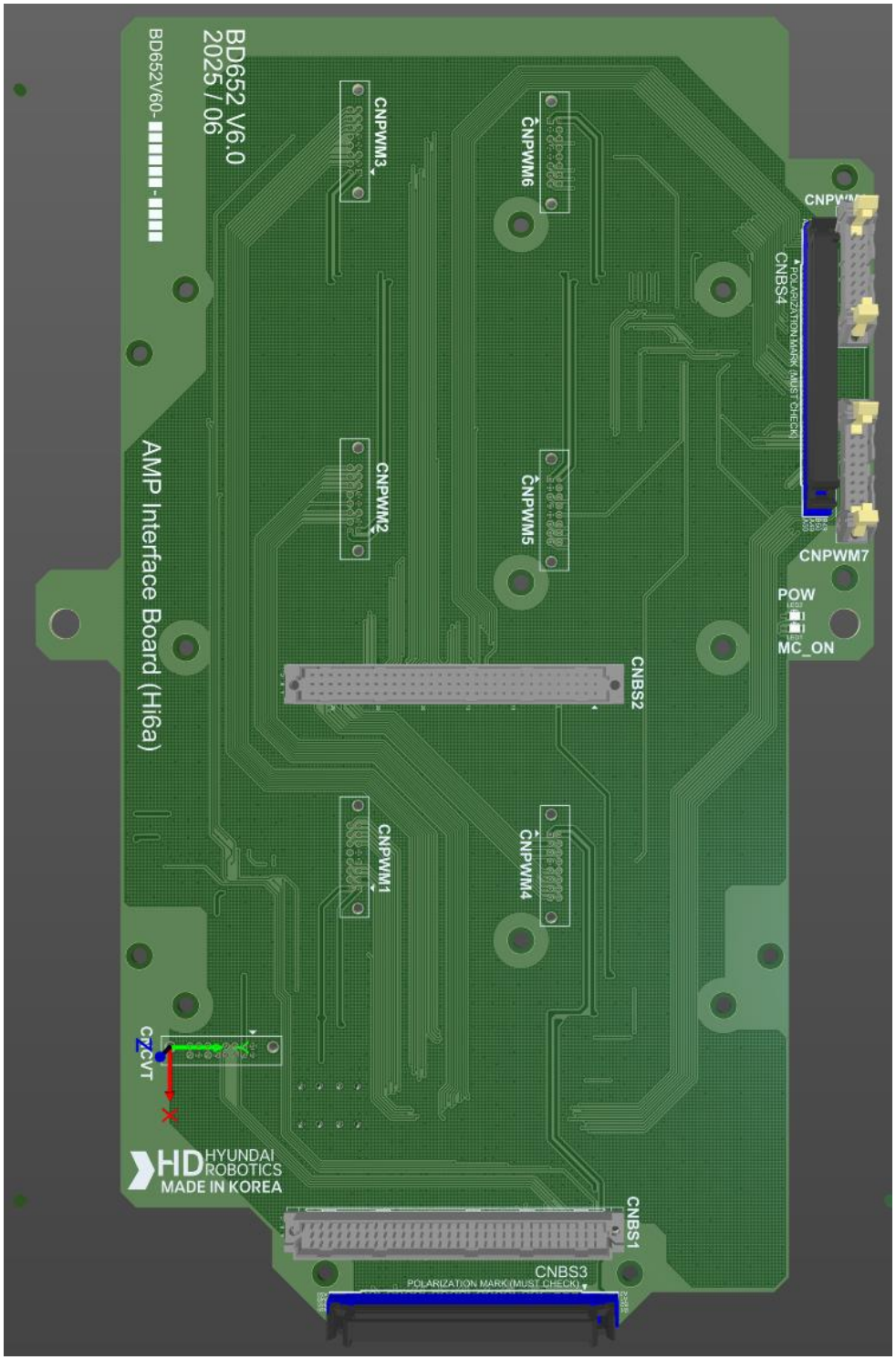
CNPWM7
CNBS4
POLARIZATION MARK (MUST CHECK)
POW
MC_ON
CNPWM6
CNPWM5
CNPWM4
CNBS2
CNBS1
CNBS3
POLARIZATION MARK(MUST CHECK)
CNPWM3
CNPWM2
CNPWM1
CZCVT
Z
X
HD HYUNDAI ROBOTICS
MADE IN KOREA
AMP Interface Board (Hi6a)
BD652 V6.0
2025 / 06
BD652V60-■■■■■■-■■■■

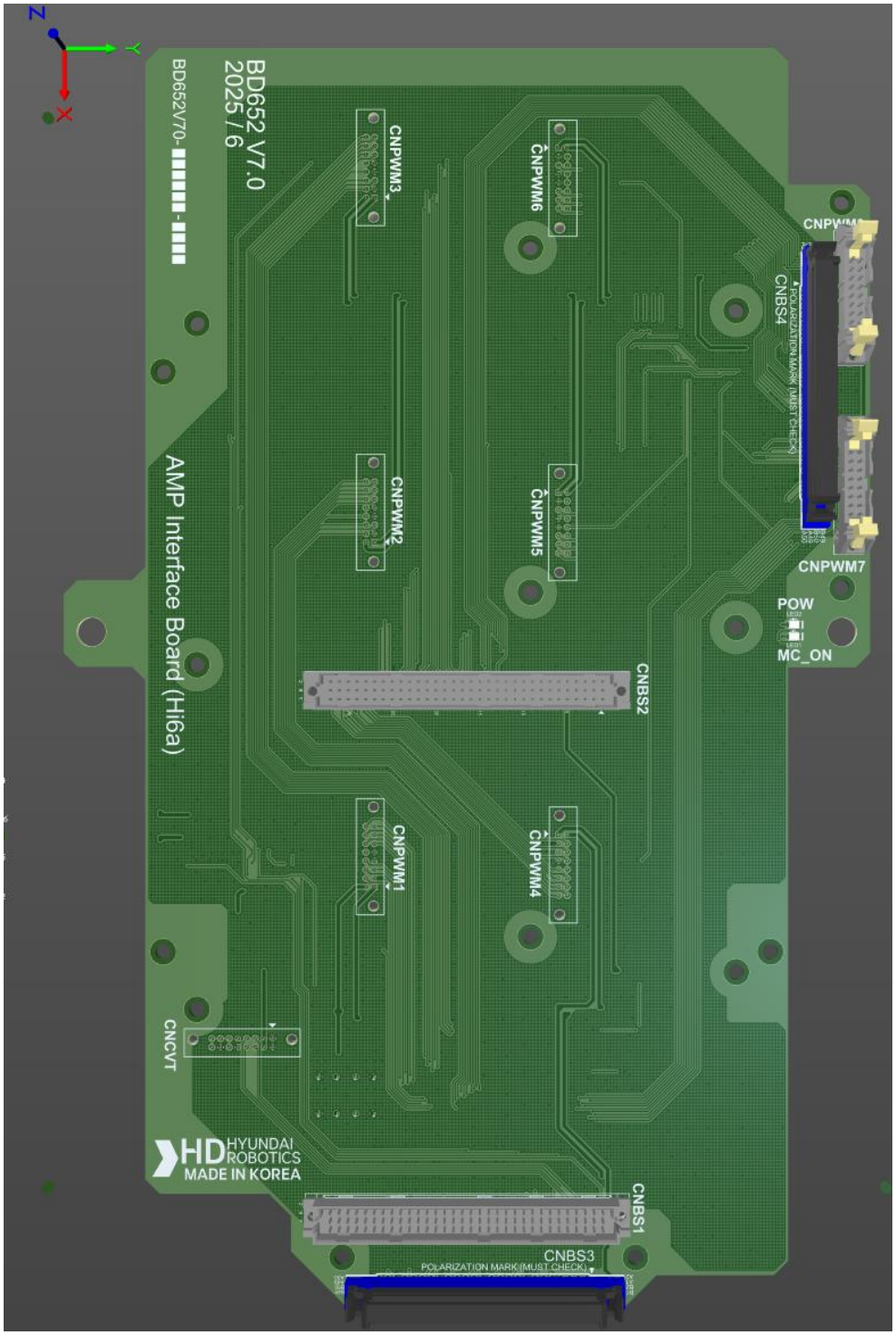


Figure 4.29 Component Layout of BD652V60 and BD652V70

Table 4-17 Description of the Connectors of BD652

| Name | Usage | Connection of external devices |
|---|---|---|
| CNBS1~3 | PWM signals and IPM error signals for 8 axes<br>Converter part error signal | Board-to-board connectors of BD640 |
| CNPWM1~6 | PWM signals and IPM error signals for individual axes | Board-to-board connectors of BD651 |
| CNPWM7~8 | PWM signal and IPM error signal for the additional axis | CNPWM of the drive module (BD658 or BD659) of the additional axis |
| CNCVT | Converter part error signal | Board-to-board connectors of BD651 |

Table 4-18 Description of the LEDs of BD652

| Name | Color | Status Display |
|---|---|---|
| MC | Yellow | Will be turned on when the magnet contact is driving |
| POW | Green | Will be turned on when the control power is normal |

#### 4.3.4.2. H7D6A (Small-Sized 6 Axes Integrated Drive Module)

The drive module performs a power amplification function that allows the current to flow to individual phases of the motor according to the current command from the servo board. The six axes integrated drive module can drive six motors at the same time and is configured as follows.

The three-phase current entered from the power supply module is rectified through a diode module and then converted into direct current and stored in a smoothing capacitor. When the motor speed of the robot is decelerated, the electric power generated from the motor will be consumed through IGBT and resistors. The relevant configuration is as follows.

Table 4-19 Configuration of H6D6A (Small-Sized 6 Axes Integrated Drive Module)

| Components | | Components |
|---|---|---|
| BD653 (Power Board) | Gate drive circuit | Generates the IPM gate signal |
| | Gate power module | Generates the gate power |
| | Current detection part | Detects the current that flows through the motor |
| | Regenerative control | Turn on the IGBT when the PN voltage rises |
| | Error detection part | Detects the overvoltage, regenerative resistor overheating, and undervoltage errors |
| | High voltage capacitor | Smooths the direct current |
| BD654 (Interface Board) | Sequence interlocking part | Interlocks between the sequence status and the servo on signal |
| | Dedicated IO Terminal Blocks | Reserved IO port unit inside the controller |
| Other Parts | Heat sink | Releases the heat generated in power elements to the outside |
| | Rectification part | Rectify the AC input power to generate DC power for driving the motor |
| | Regenerative IGBT | Performs regenerative discharge |
| | IPM | Convert the power for driving a three-phase motor |

| | |
|---|---|
| ⚠ Caution | The drive module differs depending on the type of the robot, so you must check the type when replacing it. |

■ Configuration of the Type Number of the Small-Sized 6 Axes Integrated Drive Module

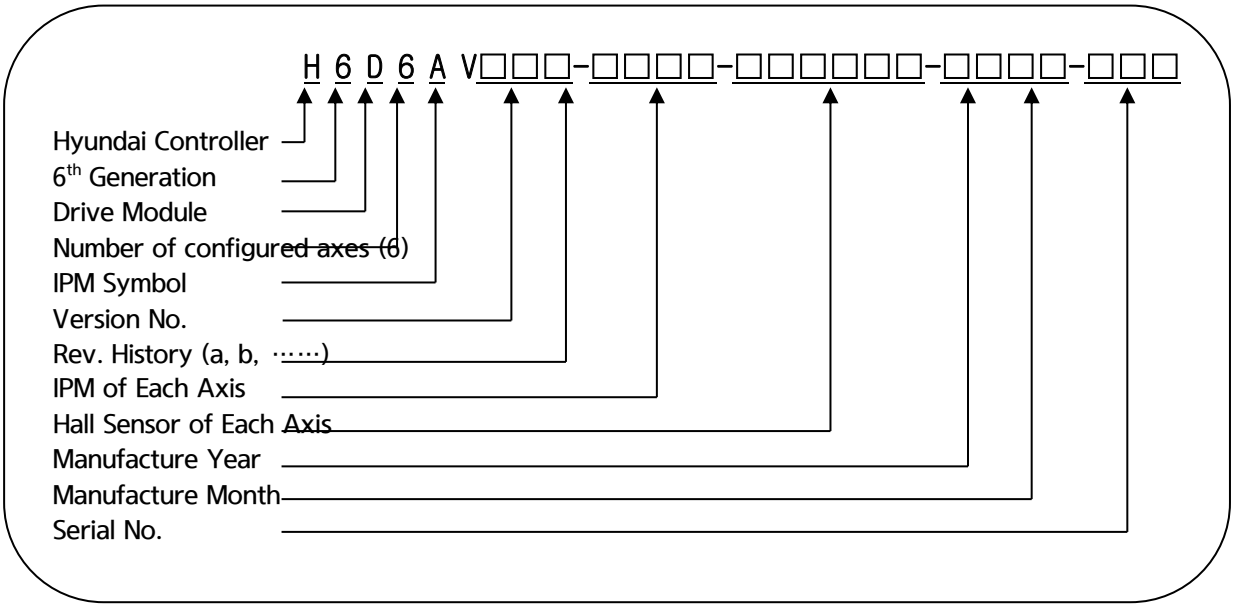


Table 4-20 Type Symbol of the Small-Sized 6 Axes Integrated Drive Module

| Category | Type symbol |
|---|---|
| Hi7 Small-Sized 6 Axes drive module | H7D6A |

Table 4-21 Specification of the Small-Sized 6 Axes Integrated Drive Module

| Configuration | Classification | | Application | |
|---|---|---|---|---|
| IPM capacity | 3A | 3D | HA006B, HH020 | 6 axes integrated |
| Year | 00~99 | | Production year: 2000-2099 | |
| Month | 01~12 | | Production month: January-December | |
| Serial No. | 001~999 | | Number of units produced monthly: 1~999 | |

Table 4-22 Symbols of the IPM of the small-sized 6 axes drive module

| Drive Model | IPM symbol | IPM Specification |
|---|---|---|
| Drive module of the small-sized 6 axes | A | (IPM allowable current rating) 30A |
| | D | (IPM allowable current rating) 10A |

Table 4-23 Symbols of the Hall Sensors of the small-sized 6 axes drive module

| Drive model | Hall sensor symbol (Specification) | Full-scale current (Im) | IPM specification (Allowable current rating) |
|---|---|---|---|
| Drive module of the small-sized 6 axes | 3 (4V/15A) | 27.27 Apeak | 6MBP50VAA060 (30A) |
| | 4 (4V/10A) | 18.18 Apeak | |
| | 5 (4V/5A) | 9.19 Apeak | 6MBP20VAA060 (10A) |
| | 6 (4V/3A) | 5.45 Apeak | |
| | 7 (4V/6A) | 10.91 Apeak | 6MBP50VAA060 (30A) |
| | 8 (4V/2A) | 3.64 Apeak | 6MBP20VAA060 (10A) |
| | 9 (4V/1A) | 1.82 Apeak | |

| | |
|---|---|
| ⚠ Caution | The drive module differs depending on the type of the robot, so you must check the type when replacing it. |

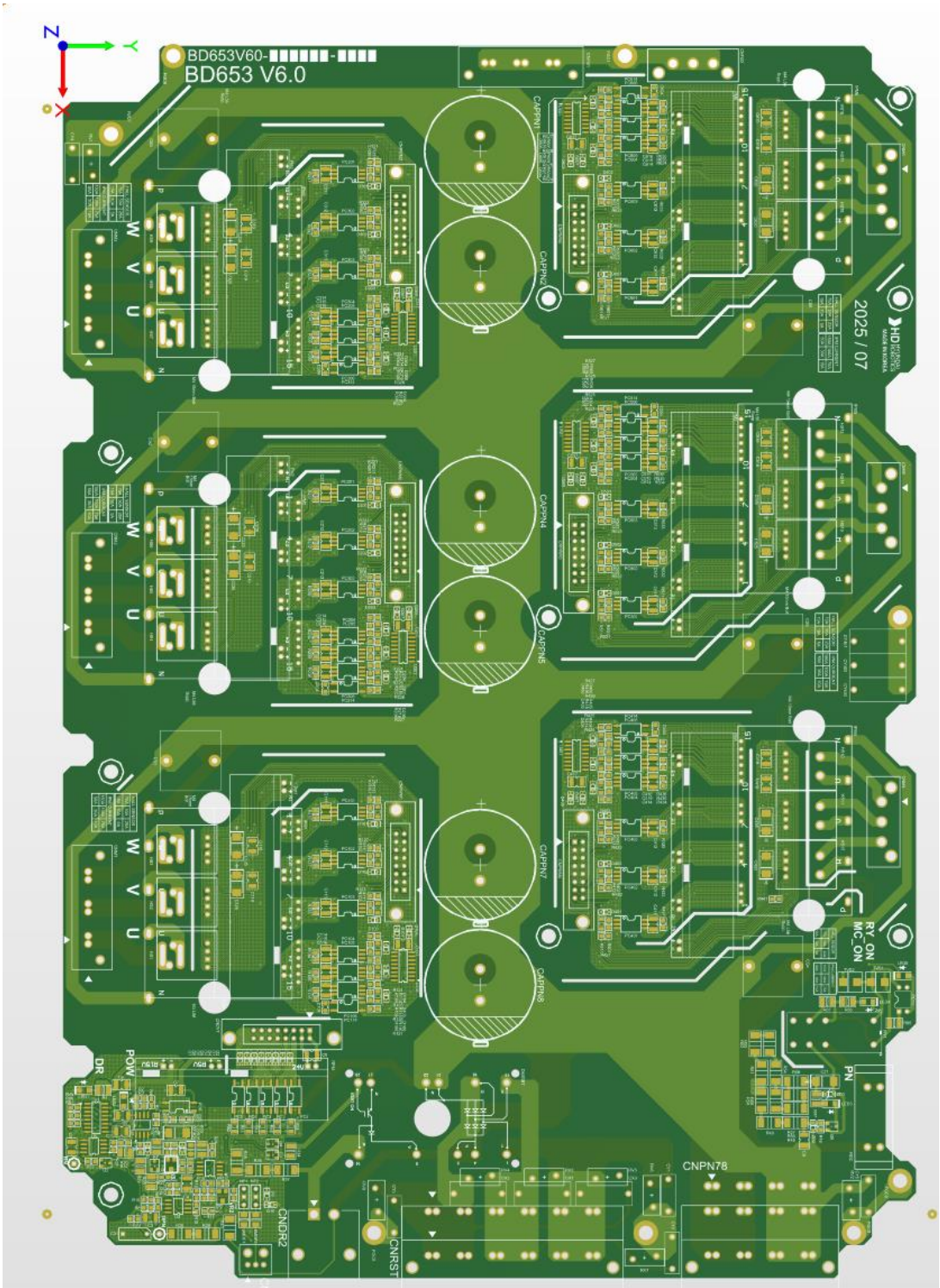


Figure 4.30 Component Layout of BD653V60

Table 4-24 Description of the Connectors of BD653

| Name | Usage | Connection of external devices |
|---|---|---|
| CNPWM1~6 | PWM signals and IPM error signals | Board-to-board connectors of BD654 |
| CNRST | 3-phase power input | CNRST for the electronic module |
| CNCVT | Converter part error signal | Board-to-board connectors of BD654 |
| CNDR | Regenerative discharge power output | Regenerative discharge resistor |
| CNTR | Regenerative discharge resistor overheating detection | Regenerative discharge resistor temperature sensor |
| CNM16 | Motor drive output | CMC1 |
| CNPN7~8 | Direct current for the drive module of the additional axis | CNPN for the drive module for an optional additional axis |
| CNFG1, CNFG4 | Frame ground for motors | CMC1 |

Table 4-25 Description of the LEDs of BD653

| Name | Color | Status display |
|---|---|---|
| MC ON | Yellow | Will be turned on when the magnet contact is driving |
| POW | Green | Will be turned on when the control voltage of the converter part is normal |
| DR | Red | Will be turned on the regenerative discharge is operating |
| PN | Red | Will be turned on when the PN voltage is higher than 42V |
| RYON | Red | Will be turned off when the PN discharge operation starts |

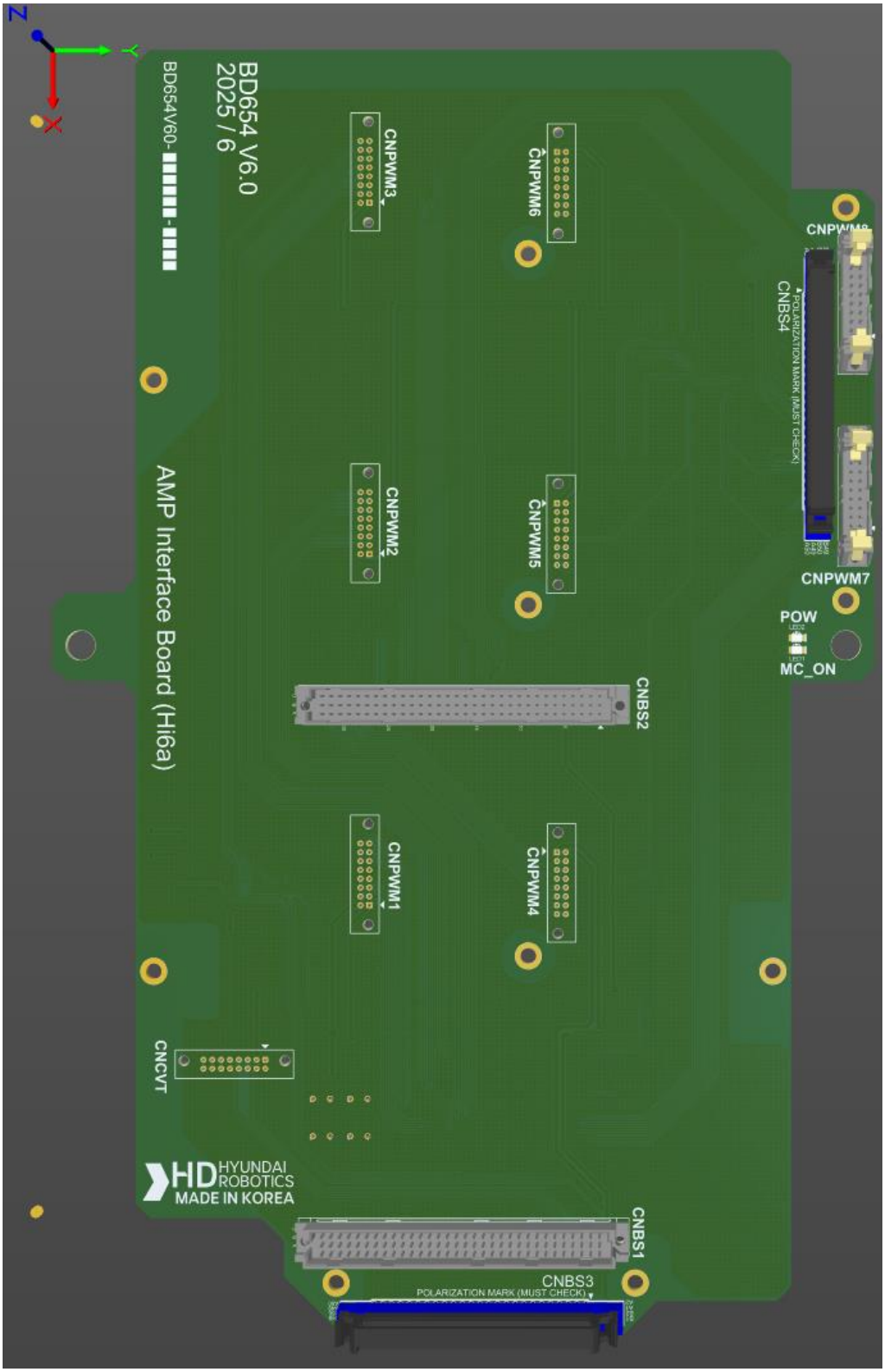


Figure 4.31 Component Layout of BD654V60

Table 4-26 Description of the Connectors of BD654

| Name | Usage | Connection of external devices |
|---|---|---|
| CNBS1-3 | PWM signals and IPM error signals for 8 axes<br>Converter part error signal | Board-to-board connectors of BD640 |
| CNPWM1-6 | PWM signals and IPM error signals for individual axes | Board-to-board connectors of BD653 |
| CNPWM7-8 | PWM signal and IPM error signal for the additional axis | CNPWM of the drive module (BD658 or BD659) of the additional axis |
| CNCVT | Converter part error signal | Board-to-board connectors of BD653 |

Table 4-27 Description of the LEDs of BD654

| Name | Color | Status Display |
|---|---|---|
| MC | Yellow | Will be turned on when the magnet contact is driving |
| POW | Green | Will be turned on when the control power is normal |

#### 4.3.4.3. Specification of the Optional Drive Module

■ Configuration of the Type Number of the Optional Drive Module

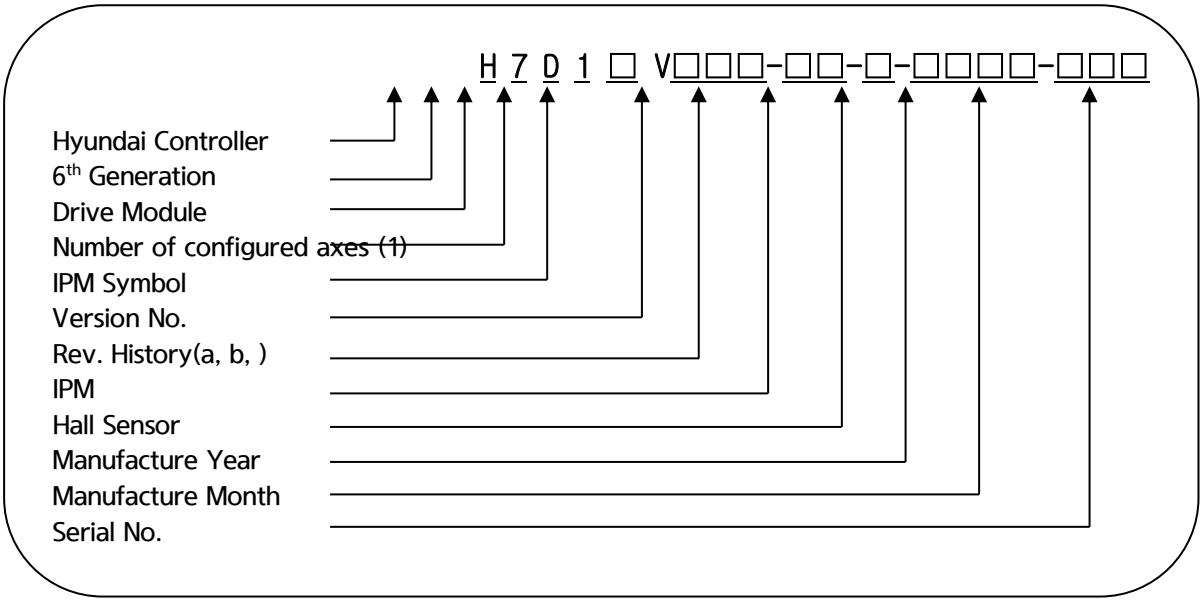


Table 4-28 Type Symbol of the Optional Drive Module

| Category | Type symbol |
|---|---|
| Hi7 1 Axes drive module | H7D1 |

Table 4-29 Symbols of the IPM of the Optional Drive Module

| Drive Model | IPM symbol | IPM Specification |
|---|---|---|
| Drive module of the additional axis | X | (IPM current rating) 100A |
| | Y | (IPM current rating) 75A |
| | Z | (IPM current rating) 50A |

Table 4-30 Symbols of the Hall Sensors of the Optional Drive Module

| Drive model | Hall sensor symbol (Specification) | Full-scale current (Im) | IPM specification (Rated current |
|---|---|---|---|
| Drive module of the additional axis | 1 (4V/50A) | 93.75 Apeak | PM100CG1APL065 202G (100A)<br>PM75CG1APL065 202G (75A)<br>PM50CG1APL065 202G (50A) |
| | 2 (4V/25A) | 46.87 Apeak | |
| | 3 (4V/15A) | 28.12 Apeak | |
| | 4 (4V/10A) | 18.75 Apeak | |
| | 5 (4V/5A) | 9.37 Apeak | |

#### 4.3.4.4. H7D1X (Carriage Drive Module; Optional)

The drive module performs a power amplification function that allows the current to flow to the individual phases of the motor according to the current command from the servo board. The carriage drive module can drive one motor of 100A or below and is configured as follows.

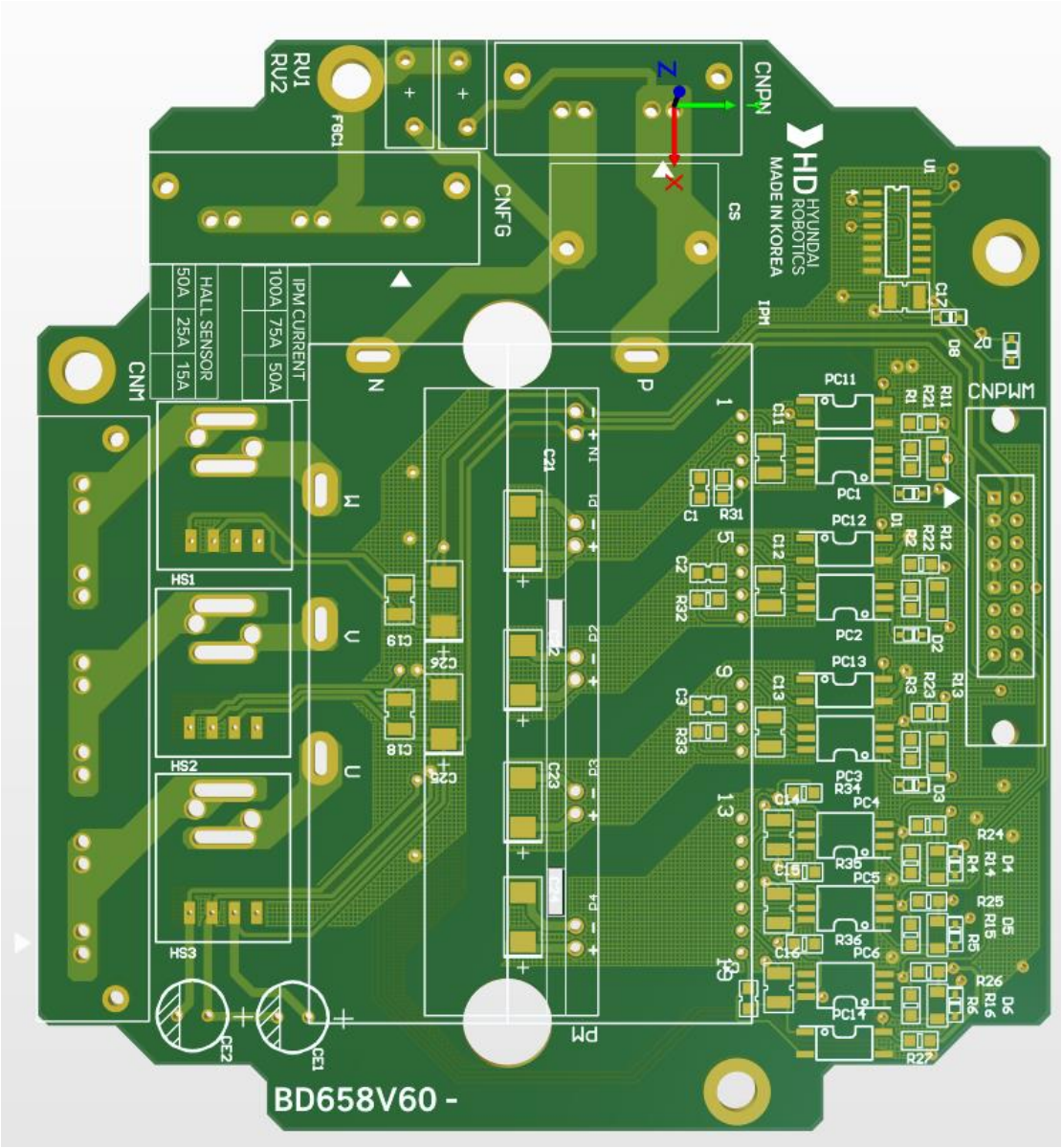


Figure 4.32 Component Layout of BD658V60 for H6AD1X

Table 4-31 Configuration of H6D1X

| Components | | Functions |
|---|---|---|
| BD658 (IPM board) | Logic part | Converts the PWM signals received from the drive module for the 6 axes into the upper and lower sides drive signals of the IPM, and processes errors |
| | Gate power module | Generates the IPM gate power |
| | Current detection part | Detects the current that flows through the motor |
| Other parts | Heat sink | Releases the heat generated in IPM to the outside |
| | IPM | Convert the power for driving a three-phase motor |

Table 4-32 Description of the Connectors of H6D1X

| Name | Usage | Connection of external devices |
|---|---|---|
| CNPWM | PWM signal and error signal | CNPWM7 or CNPWM8 of the drive module (BD652 or BD654) for the 6 axes |
| CNM | Motor drive output | AMC1 or AMC2 |
| CNFG | Frame ground for the motor | AMC1 or AMC2 |
| CNPN | Drive direct current power input | CNPN7 or CNPN8 of the drive module (BD651 or BD653) for the 6 axes |

#### 4.3.4.5. H7D1Z (Servo Gun Drive Module; Optional)

The drive module performs a power amplification function that allows the current to flow to the individual phases of the motor according to the current command from the servo board. The servo gun drive module can drive one motor of 50A or below and is configured as follows.

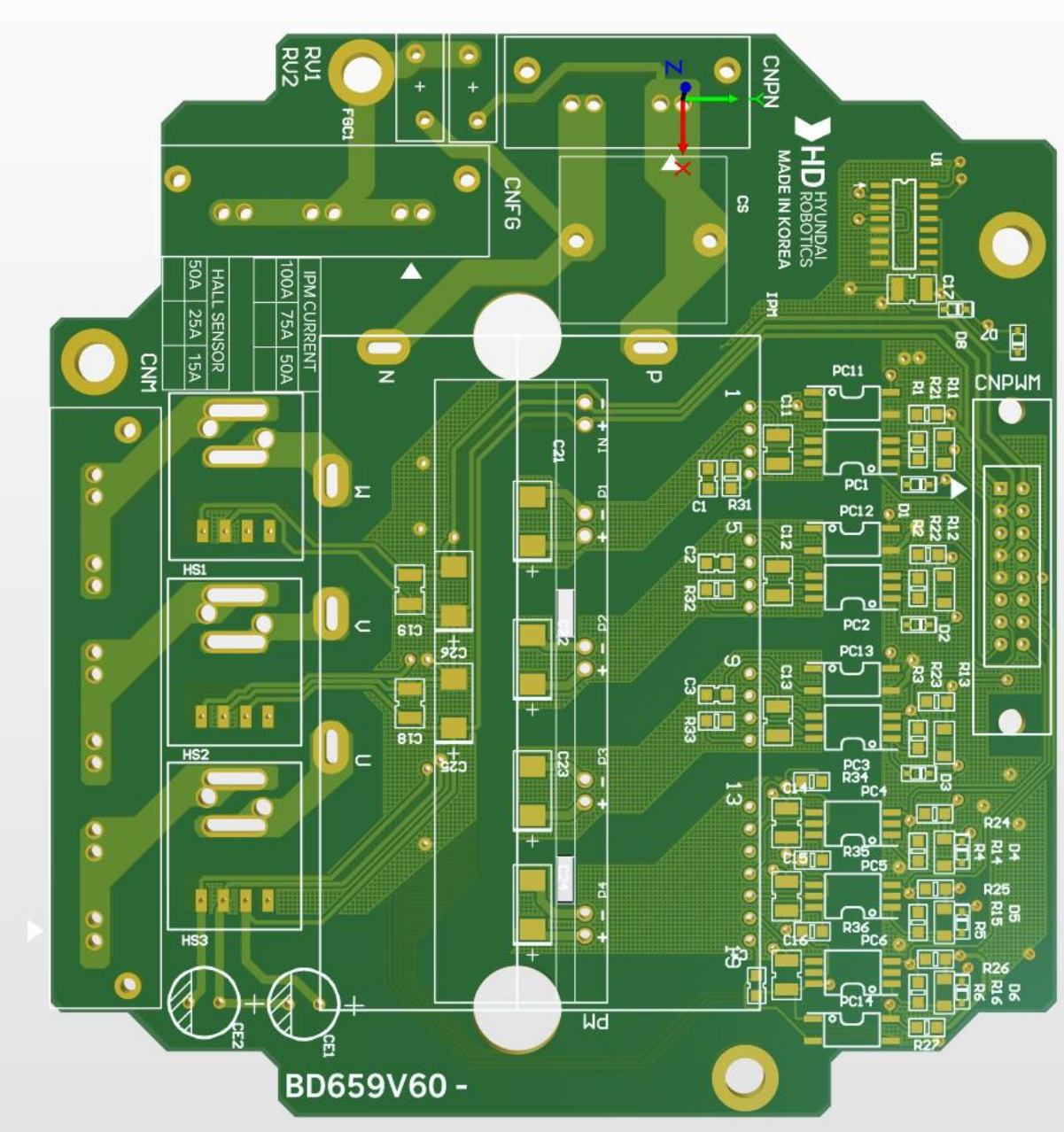


Figure 4.33 Component Layout of BD659V60 for H6AD1Z

Table 4-33 Configuration of H6D1Z

| Components | | Functions |
|---|---|---|
| BD659 (IPM Board) | Logic part | Converts the PWM signals received from the drive module for the 6 axes into the upper and lower sides drive signals of the IPM, and processes errors |
| | Gate power module | Generates the IPM gate power |
| | Current detection part | Detects the current that flows through the motor |
| Other parts | Heat sink | Releases the heat generated in IPM to the outside |
| | IPM | Convert the power for driving a three-phase motor |

Table 4-34 Description of the Connectors of H6D1Z

| Name | Usage | Connection of external devices |
|---|---|---|
| CNPWM | PWM signal and error signal | CNPWM7 or CNPWM8 of the drive module (BD652 or BD654) for the 6 axes |
| CNM | Motor drive output | AMC1 or AMC2 |
| CNFG | Frame ground for the motor | AMC1 or AMC2 |
| CNPN | Drive direct current power input | CNPN7 or CNPN8 of the drive module (BD651 or BD653) for the 6 axes |

## 4.3.5. Power Supply Module (H7PSM)

### 4.3.5.1. H7PSM and Power Distribution Board (BD6C3)

The H7PSM (Hi7-N controller power supply module) module is responsible for the opening and closing and distribution of various power supplied to the controller. The following figures show the interior and exterior of the electrical module with diverse connectors and fuses.

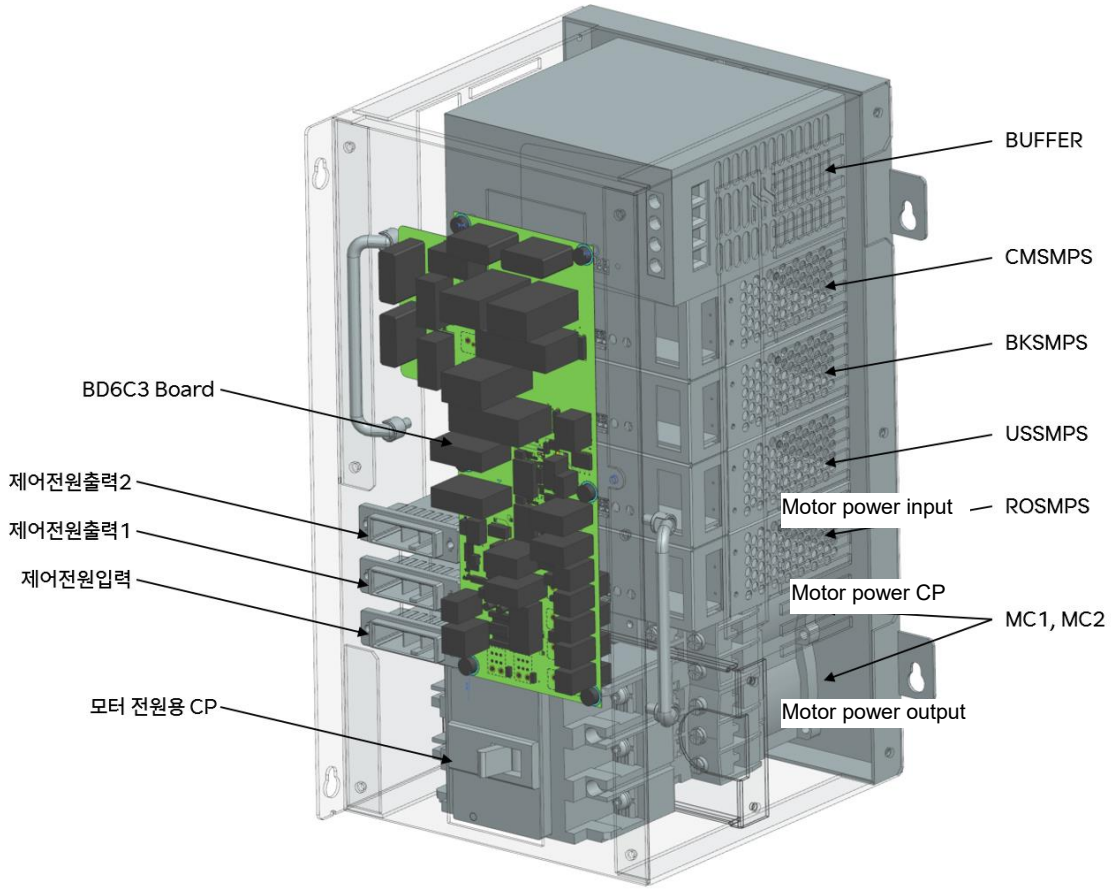


Figure 4.34 Exterior of H7PSM (Hi7-N Controller Power Supply Module)

The following figure shows the power system diagram for the AC control power related to the opening and closing of the 3-phase AC power for the motor power, the generation of the brake power, and the driving of the fan. The diagram in the figure also shows the power distribution, such as the SMPS power for the DC power supply to the control module. A circuit breaker (CP) or fuse is connected to each power to protect individual circuits against overcurrent.

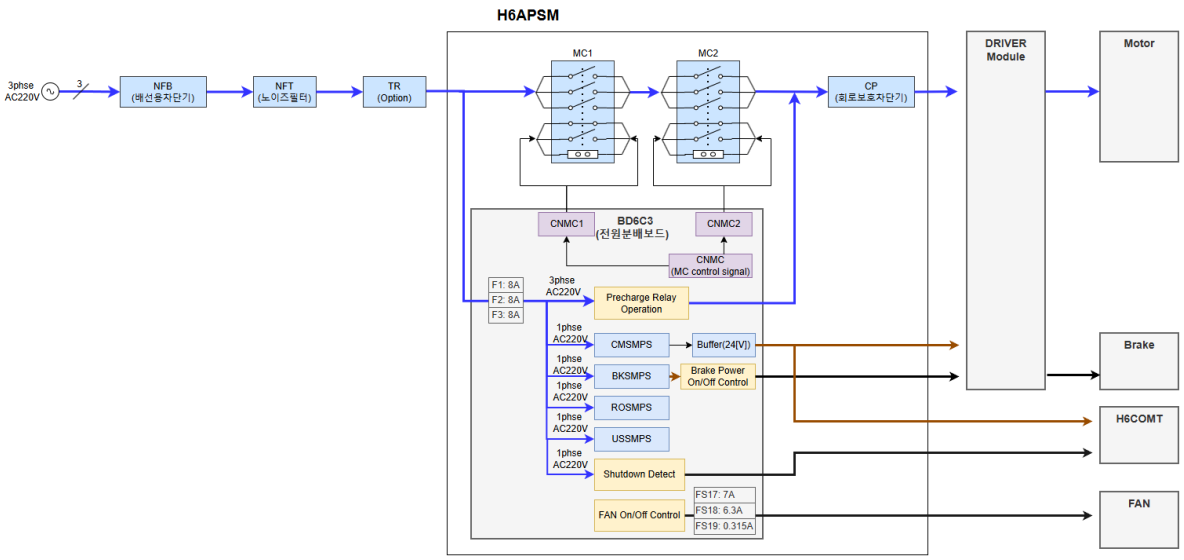


Figure 4.35 Power System of the Hi7-N Controller

Table 4-35 Types and Usage of the Fuses of the Electronic Module

| Name | Function | Specification |
|---|---|---|
| F1, F2, F3 | Fuse for overcurrent protection of control power (AC220 V) | AC220V 8A |
| FS17 | Fuse for overcurrent protection of CMDCFAN and DCFAN2-5 GND | 7VAC/60VDC 7A |
| FS18 | Fuse for overcurrent protection of DCFAN2-5 | 125VAC/125VDC 6.3A |
| FS19 | Fuse for overcurrent protection of the DC fan for control module cooling | 125VAC/125VDC 0.315A |

#### 4.3.5.2. Connectors of BD6C3

The connector layout of the electrical board (BD6C3) is shown in the following figure. The function and connection device for each are listed in Table 4-40.

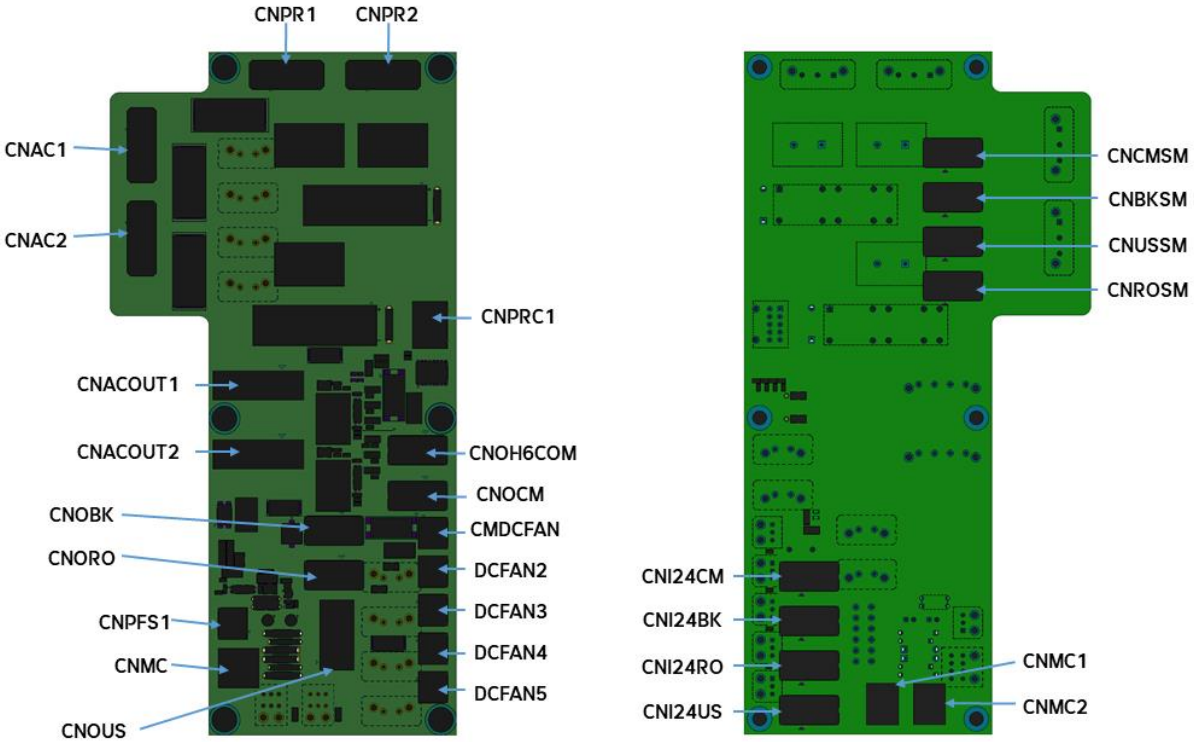


Figure 4.36 Connectors of the Electronic Board (BD6C3)

Table 4-36 Type and Function of BD6C3 Connector

| Name | Fuction | Specification |
|---|---|---|
| CNAC1 | 3-phase power input for control | 3-phase 220 V |
| CNAC2 | 3-phase power output for control of 16 axes or more | 3-phase 220 V |
| CNPR1 | Inrush current limiting circuit input | 3-phase 220 V, MC1 input terminal |
| CNPR2 | Inrush current limiting circuit output | 3-phase 220 V, MC2 output terminal |
| CNACOUT1 | 220 VAC power output 1 for users | Single-phase 220 V |
| CNACOUT2 | 220 VAC power output 2 for users | Single-phase 220 V |
| CNPFS1 | CMSMPS power failure detection signal output 1 | H6COM DIO |

| | | |
|---|---|---|
| CNMC | Contactor control and monitoring | BD642 CNMC |
| CNPRC | Control and monitoring of inrush current limiting circuit, fan fault and fan power | BD642 CNPRC |
| CNFN1 | DC fan power output for control module | 24VDC |
| CNFN2~5 | DC fan power output | 24VDC |
| CNOCM | SMPS 24VDC output for control modules | 24VDC |
| CNOH6COM | SMPS 24VDC output for H6COMs | 24VDC |
| CNOBK | SMPS 24VDC output for motor brakes | 24VDC |
| CNORO | SMPS 24VDC output for robots | 24VDC |
| CNOUS | SMPS 24VDC output for users | 24VDC |
| CNCMSM | SMPS 220VAC input for control modules | Single-phase 220 V |
| CNBKSM | SMPS 220VAC input for motor brakes | Single-phase 220 V |
| CNUSSM | SMPS 220VAC input for users | Single-phase 220 V |
| CNROSM | SMPS 220VAC input for robots | Single-phase 220 V |
| CNI24CM | Input for SMPS 24VDC distribution for common modules | 24VDC |
| CNI24BK | Input for SMPS 24VDC distribution for brakes | 24VDC |
| CNI24RO | Input for SMPS 24VDC distribution for robots | 24VDC |
| CNI24US | Input for SMPS 24VDC distribution for users | 24VDC |
| CNMC1 | Magnetic contactor 1 ON/OFF power input and feedback, and brake control signal control | MC1 |
| CNMC2 | Magnetic contactor 2 ON/OFF power input and feedback, and brake control signal control | MC2 |

#### 4.3.5.3. BD6C3 LED

The LED layout of the electrical board (BD6C3) is shown in the following figure. The function, connected power, and LED color for each are listed in Table 4-41.

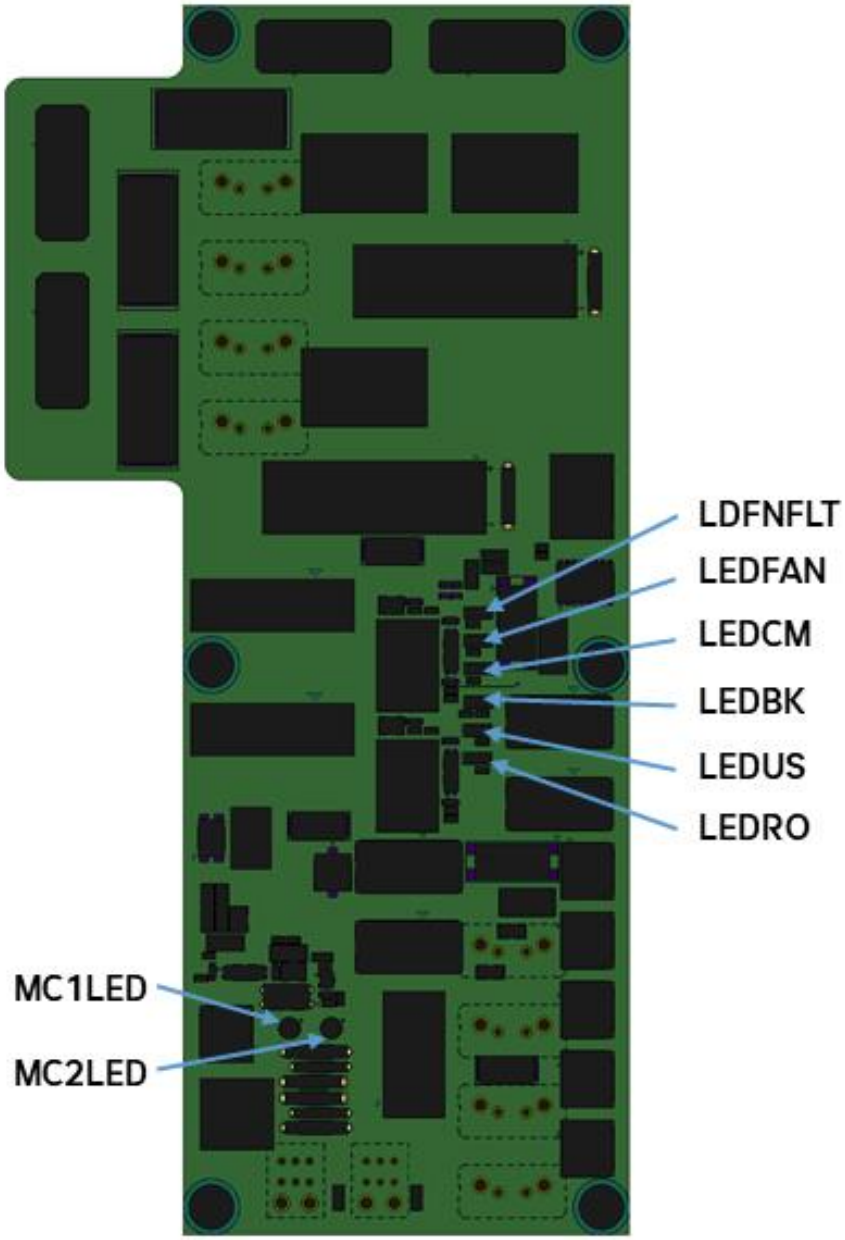


Figure 4.37 LEDs of BD6C3

Table 4-37 Types and Functions of BD6C3 LEDs

| 명칭 | 용도 | 사양 |
|---|---|---|
| LDFNFLT | ON when a fault occurs in one or more of FAN 1–5 | FAN Fault, Red |
| LEDFAN | ON when the relay for supplying 24VDC to the fan is ON | FAN Power Relay, Green |
| LEDCM | ON when SMPS 24VDC for control modules is normally supplied | CMSMPS, Green |
| LEDBK | ON when SMPS 24VDC for brakes is normally supplied | BKSMPS, Green |
| LEDUS | ON when SMPS 24VDC for users is normally supplied | USSMPS, Green |
| LEDRO | ON when SMPS 24VDC for robots is normally supplied | ROSMPS, Green |
| MC1LED | ON when the ON power for magnetic contactor 1 is normally supplied | BD642, Green |
| MC2LED | ON when the ON power for magnetic contactor 2 is normally supplied | BD642, Green |
| RYPRC1 | ON inside relay when aprecharging relay ON signal is supplied | BD604, Green |
| RYPRC2 | ON inside relay when a fan power relay ON signal is supplied | BD604, Green |

## 4.3.6. Teach Pendant (TP630)

### 4.3.6.1. Overview

The teach pendant (TP630) communicates with the main module (H6COM-T) of the controller through Ethernet and allows the user to directly operate the following functions.

- Monitoring : Job program / Data of each axis / Input and output signals / Status of the robot, etc.
- Log management : System version, operation time, error log, stop log, etc.
- File management : Version and teach program up/down
- Setting of various variables : User environment / control / robot / application / automatic integer, etc.
- Robot teaching : Jog and teach program registration
- Robot operation : Motor on / start / stop / mode settings

The teach pendant is also equipped with a three-stage enable switch and emergency stop switch to ensure user safety.
In addition, a USB A type connector is mounted under the rubber cover at the bottom of the teach pendant, allowing the user to upload/download necessary files, such as data and teaching programs, as well as versions of diverse types of boards using a USB memory stick.

Figure 4.38 Exterior of the Teach Pendant TP630

#### 4.3.6.2. USB Cover

There is a USB A type connector mounted under the rubber cover at the bottom of the teach pendant, allowing the user to upload/download necessary files, such as versions of diverse types of boards, as well as data and teaching programs, using a USB memory stick.

# 5

# Optional Components of the Controller

Table 5-1 Summary of Optional Configurations

| Component | | Function |
|---|---|---|
| Control options | Extended safety signal board (BD680) | - 8-channel safety digital input<br>- 8-channel safety digital output |
| | User DIO board (BD681) | - Up to 48-digital input channel |
| | Extended DIO board (BD682) | - Up to 48-digital output channel<br>- NPN/PNP switchable<br>- 8 relay output channels selectable among digital outputs<br>- PROFiNET communication: 240 bytes input, 240 bytes output |
| Communication options | Ethernet/IP Master/Slave | - Supports H6COM-T LAN port<br>- Configurable in TP630 |
| | 2'nd EtherCAT Master | |
| | CIP Safety | |
| PCI communication card | 15 types of PC cards CIFX 50 series | - Ethernet Master/Slave<br>- CC-Link Slave<br>- DeviceNET Master/Slave<br>- PROFIBUS Master/Slave<br>- CC-Link IE Fileld |
| Brake release unit | - | - Used when motor brake release of each robot axis is required |
| Remote IO module | Communication module<br>IO module | - Required for additional use beyond user DIO signals |

## 5.1. PCI Communication Card

### 5.1.1. Overview

To use industrial communication in the Hi7 controller, you can use a PCI communication card. Descriptions below are provided based on a PCI communication card for Ethernet, which is a general model. For details, please refer to the contents for the PC Cards CIFX 50 model in the document "PC Cards CIFX 50 50E 70E 100EH UM 51 EN."

Table 5-2 Part Names of PCI Communication Cards

| No. | Model name | Communication type | Interface connector |
|---|---|---|---|
| 1 | CIFX 50-RE/ML-HRC | HRC Real-Time Ethernet Master PCI | RJ45 |
| 2 | CIFX 50-RE-HRC | HRC Real-Time Ethernet Slave PCI | RJ45 |
| 3 | CIFX 50E-RE/ML-HRC | HRC Real-Time Ethernet Master PCIe | RJ45 |
| 4 | CIFX 50E-RE-HRC | HRC Real-Time Ethernet Slave PCIe | RJ45 |
| 5 | CIFX 50-CC-HRC | CC-Link Slave PCI | CombiCon Male, 5 pins |
| 6 | CIFX 50E-CC-HRC | CC-Link Slave PCIe | CombiCon Male, 5 pins |
| 7 | CIFX 50-DN/ML-HRC | DeviceNet Maser PCI | CombiCon Male, 5 pins |
| 8 | CIFX 50-DN-HRC | DeviceNet Slave PCI | CombiCon Male, 5 pins |
| 9 | CIFX 50E-DN/ML-HRC | DeviceNet Maser PCIe | CombiCon Male, 5 pins |
| 10 | CIFX 50E-DN-HRC | DeviceNet Slave PCIe | CombiCon Male, 5 pins |
| 11 | CIFX 50-DP/ML-HRC | PROFIBUS Master PCI | Dsub Female, 9 pins |
| 12 | CIFX 50-DP-HRC | PROFIBUS Slave PCI | Dsub Female, 9 pins |
| 13 | CIFX 50E-DP/ML-HRC | PROFIBUS Master PCIe | Dsub Female, 9 pins |
| 14 | CIFX 50E-DP-HRC | PROFIBUS Slave PCIe | Dsub Female, 9 pins |
| 15 | CIFX 50E-CCIES-HRC | CC-Link IE Field PCIe | RJ45 |

### 5.1.2. Configuration of the PCI Communication Card

A PCI communication card is basically configured, as shown below (when Ethernet-based communication is used), and varies in the number of connectors and LEDs depending on the type of industrial communication.

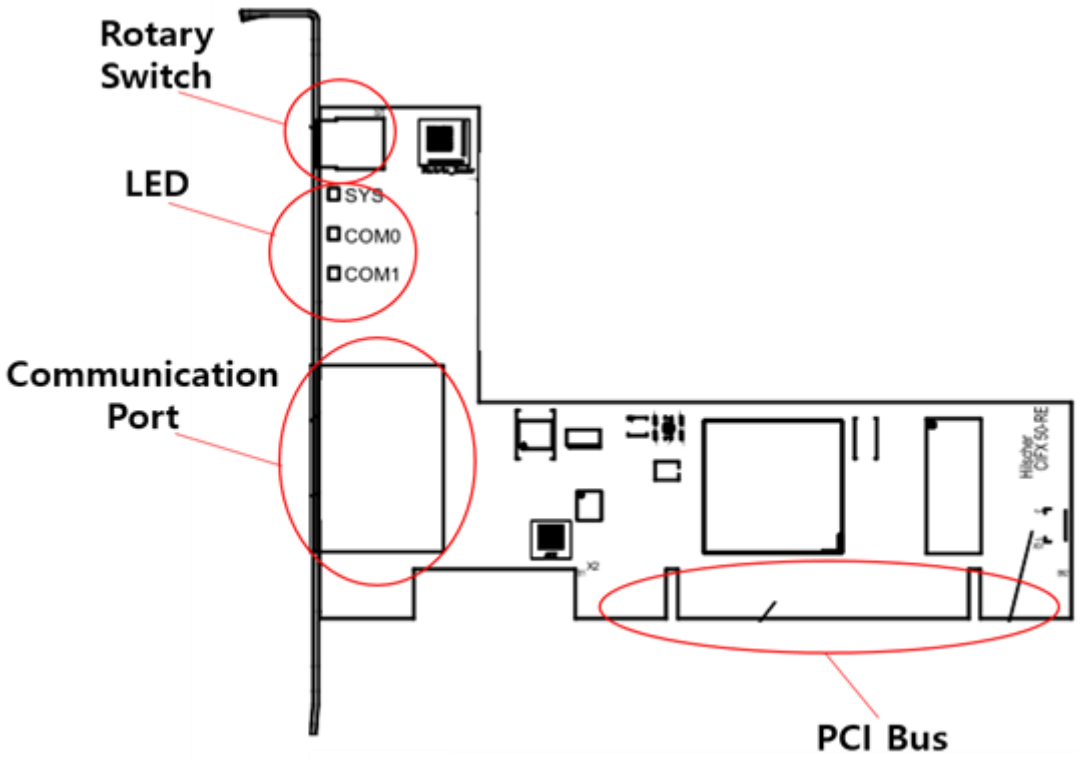


Figure 5.1 Exterior of the PCI Communication Card

Table 5-3 Description of the Exterior of the PCI Communication Card

| Name | Usage |
|---|---|
| Rotary switch | Sets the communication according to the slot ID |
| LED | Displays the system and communication status |
| Communication port | Communication connection port |
| PCI bus | PC connection bus |

### 5.1.3. Front Part of the PCI Communication Card

You can check the communication setting, communication cable connection, and communication status through the front part of the PCI communication card. Basically, you can use the card by setting the rotary switch to 1-4 in order according to the location of the H6COM-T PCI slot.

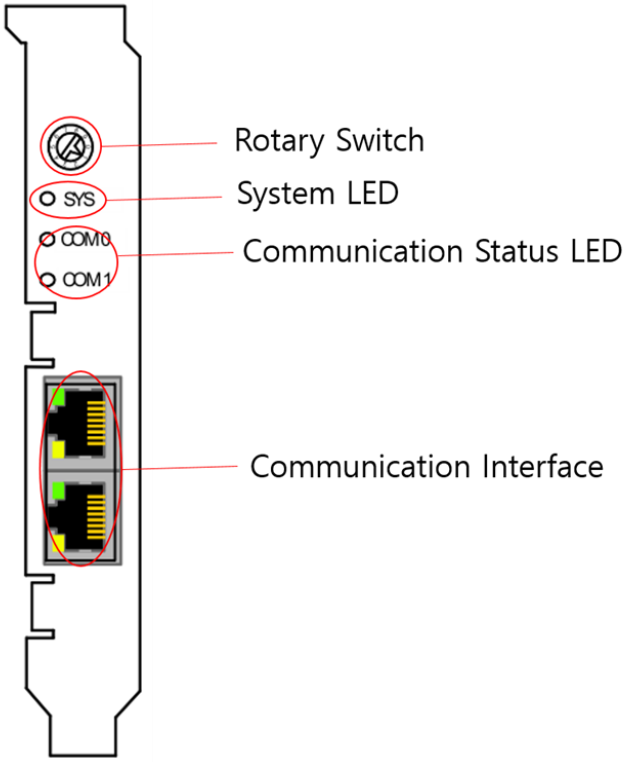


Figure 5.2 Front Part of the PCI Communication Card

Table 5-4 Configuration of the Front Part of the PCI Communication Card, and the Description of the Functions

| Name | Usage | Description of Functions |
|---|---|---|
| Rotary switch | Sets the communication for each slot number | H6COM-T PCI slots are fixed as #1~#4 sequentially starting from the one at the top (Communication to be set from TP). |
| System LED | System status checking LED | Green: System in operation<br>Yellow: Boot loader waiting |
| Communication status LED | Communication status checking LED | Green: Communication in operation<br>Red: Communication error |
| Communication Interface | Communication cable connection port | Use of connectors suitable for communication |

## 5.2. Brake Release Unit

### 5.2.1. Overview

The brake release unit can be used when it is necessary to release the motor brake for each axis of the robot. It can help to set the robot posture mainly during the initial installation of the robot. When releasing the brake, you must fully understand the safety information of "Release of the manual brake" in "1.8.2 Other Related Functions" before using the robot.

| | |
|---|---|
| ⚠ Caution | 1. Do not release more than two axes at the same time.<br>2. Keep a safe distance from the robot first before using the brake release unit.<br>3. Use the brake release unit after preparing for the dropping of the robot's axis using equipment such as a crane.<br>4. Check the safety matters while working in a group of at least two people. |

| | |
|---|---|
| ⚠ Warning | The robot should be installed and operated according to the guidelines of ISO 10218-2. In addition, it is required to comply with the relevant requirements of international standards and national laws.<br>Our company (or the manufacturer) will not be responsible for any accidents that occur because of not complying with the relevant requirements of international standards and national laws or not following the above "caution." |

### 5.2.2. Brake Release Switch

The placement of the switches of the brake release unit is as shown in Figure 5.3, and their individual usage and operation are described in Table 5-4. To release the brake of the targeted axis, first press the Enable button, and then, while pressing the Enable button, press one of the buttons B1– B8 at the same time. Then, the relevant axis will be released.

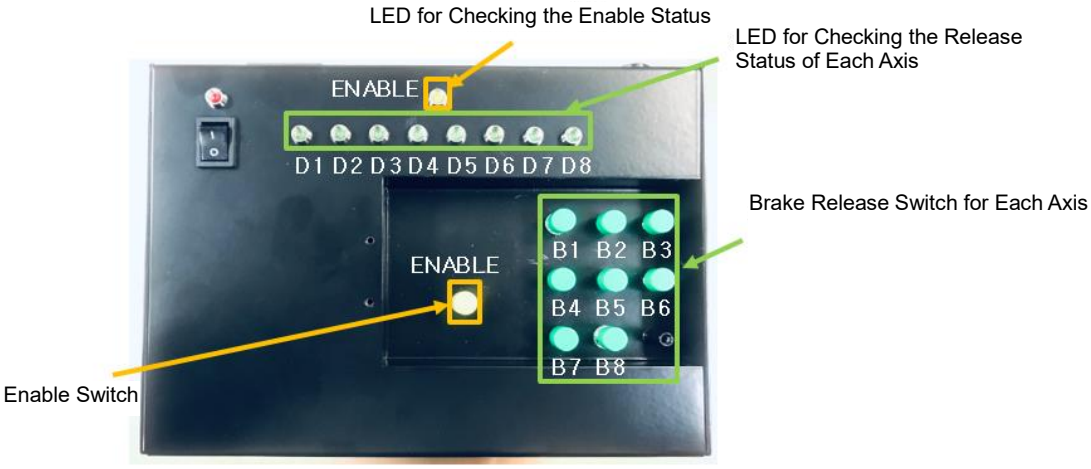


Figure 5.3 Switches and Status Checking LEDs of the Brake Release Unit

Table 5-5 Usage of the Switches of the Brake Release Unit

| Name | Usage | During operation |
|---|---|---|
| E | Brake Release Enable | Yellow Enable LED ON |
| B1 | Axis 1 Brake Release | Green D1 LED ON |
| B2 | Axis 2 Brake Release | Green D2 LED ON |
| B3 | Axis 3 Brake Release | Green D3 LED ON |
| B4 | Axis 4 Brake Release | Green D4 LED ON |
| B5 | Axis 5 Brake Release | Green D5 LED ON |
| B6 | Axis 6 Brake Release | Green D6 LED ON |
| B7 | Axis 7 Brake Release | Green D7 LED ON |
| B8 | Axis 8 Brake Release | Green D8 LED ON |

### 5.2.3. Power and Connectors

The placement of the power and connectors of the brake release unit is as shown in Figure 5.4 below, and their individual usage and connection devices are as shown in Table 5-5 below.

| | |
|---|---|
| ⚠ Caution | - When using the brake release unit, follow the procedures below.<br>1. Turn off the AC220V power switch and check that the DC24V power switch is turned off.<br>2. Connect the AC power cable to the AC power connector.<br>3. Turn on the AC220V power switch.<br>4. Turn on the DC24V power switch.<br><br>- When the use of the brake release unit is finished, follow the procedures below.<br>1. Turn off the DC24V power switch.<br>2. Turn off the AC220V power switch.<br>4. Disconnect the AC power cable.<br><br>- Do not use AC220V power and DC24V battery power at the same time. |

| | |
|---|---|
| ⚠ Warning | Our company (or the manufacturer) will not be responsible for any accidents that occur because of not complying with the above "caution." |

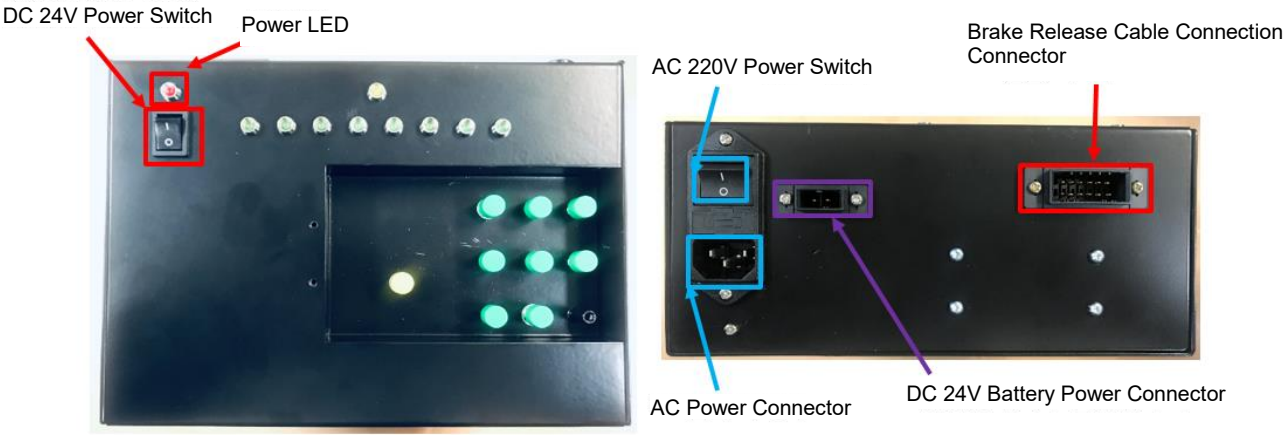


Figure 5.4 Switches and Connectors of the Brake Release Unit

Table 5-6 Types and Usage of the Connectors of the Brake Release Unit

| Name | Usage | Connection of external devices |
|---|---|---|
| AC 220V power connector and switch | Application of the AC power | 100V AC~240V AC Single phase |
| Brake release cable connection connector | Connection of the brake release unit and controller | CNB1, CNB7, and CNB8 of BD640 |
| DC24V battery power connector | Connection of the power of a portable 24V battery | Portable 24V battery |
| DC24V power switch | Brake release unit drive on/off | None |

### 5.2.4. Brake Release Unit Status Display LEDs

The LEDs for displaying the status of the brake release unit are as shown in Figure 5.3, and their individual usage and operation status are as shown in Table 5-6 below.

Table 5-7 Usage and Operation of the LEDs for the Status of the Brake Release Unit

| Name | Usage | LED On operation |
|---|---|---|
| Enable | Checking by pressing the Enable switch | When the Enable switch is pressed, the yellow Enable LED will be turned on. |
| D1 | Checking by pressing the switch for axis 1 | When the switch for axis 1 is pressed, the green D1 LED will be turned on. |
| D2 | Checking by pressing the switch for axis 2 | When the switch for axis 2 is pressed, the green D2 LED will be turned on. |
| D3 | Checking by pressing the switch for axis 3 | When the switch for axis 3 is pressed, the green D3 LED will be turned on. |
| D4 | Checking by pressing the switch for axis 4 | When the switch for axis 4 is pressed, the green D4 LED will be turned on. |
| D5 | Checking by pressing the switch for axis 5 | When the switch for axis 5 is pressed, the green D5 LED will be turned on. |
| D6 | Checking by pressing the switch for axis 6 | When the switch for axis 6 is pressed, the green D6 LED will be turned on. |
| D7 | Checking by pressing the switch for axis 7 | When the switch for axis 7 is pressed, the green D7 LED will be turned on. |
| D8 | Checking by pressing the switch for axis 8 | When the switch for axis 8 is pressed, the green D8 LED will be turned on. |

## 5.3. Remote IO

### 5.3.1. Overview

To use general IO signals in the Hi7 controller, you need the commercial remote IO. Basically, the commercial remote IO can be used by connecting an "IO module" (selected by the user) to one "communication module." The module introduced below is a commercial remote IO module of Crevis, and you may purchase and use a commercial remote of other companies. For details on how to use each module, you are required to ask the company about the IO module you purchased.

| | |
|---|---|
| ⚠ Caution | Fieldbus communication must be available to use the commercial remote IO. Therefore, you should configure the PCI communication card together by referring to "5.1 PCI Communication Card" mentioned above. |

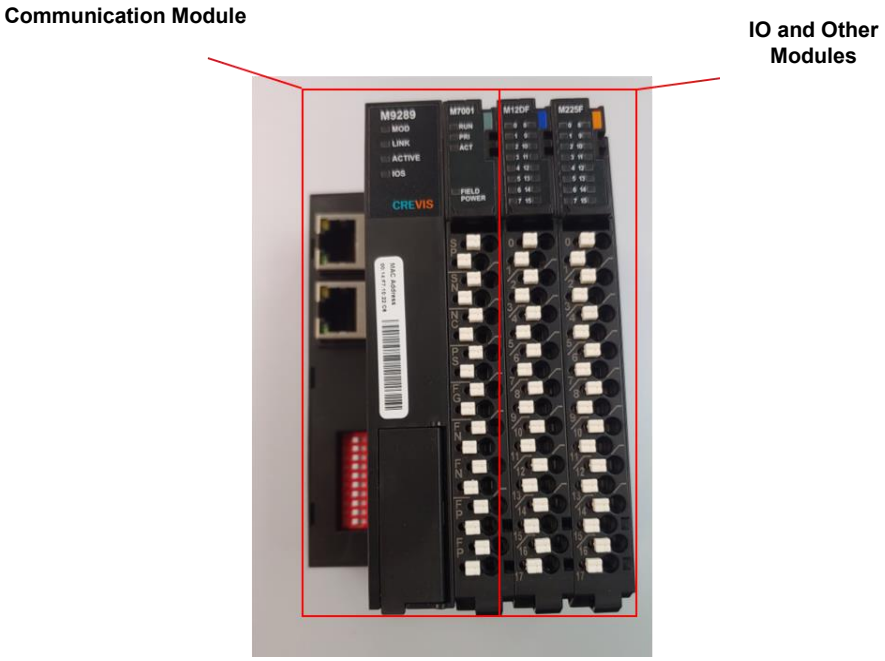


Figure 5.5 Example of Configuration of Commercial Remote IO

### 5.3.2. Communication Module (of Crevis)

The types of communication modules are as shown below and can be used according to the desired communication.

Table 5-8 Communication Module (of Crevis)

| No. | Model name | Specification |
|---|---|---|
| 1 | M9212 | DeviceNet Network Adapter |
| 2 | M9287 | ProfiNet Network Adapter |
| 3 | M9289 | ModbusTCP/UDP, EthernetIP Network Adapter |
| 4 | M9386 | EtherCAT ID Network Adapter, 1452 bytes |

### 5.3.3. IO and Other Modules (of Crevis)

The types of IO and other modules are as shown below and can be configured and used according to the desired operation.

Table 5-9 IO Module (of Crevis)

| No. | Model name | Specification |
|---|---|---|
| 1 | M12DF | Digital Input 16 Points, Universal (Sink or Source), 24VDC, 18RTB |
| 2 | M12FA | Digital Input 32 Points, Universal (Sink or Source), 24VDC, Hirose 40P |
| 3 | M225F | Digital Output 16 Points, Sink, 24VDC/0.3A, 18RTB |
| 4 | M226F | Digital Output 16 Points, Source, 24VDC/0.3A, 18RTB |
| 5 | M22BA | Digital Output 32 Points, Sink, 24VDC/0.3A, Hirose 40P |
| 6 | M2618 | Digital Output 8 Points, Sink, 24VDC/1A, Max 8A, 18RTB |
| 7 | M2628 | Digital Output 8 Points, Source, 24VDC/1A, Max 8A, 18RTB |

Table 5-10 Relay Module (of Crevis)

| No. | Model Name | Specification |
|---|---|---|
| 1 | M2788 | MOS Relay, 8 Points, 110VDC/AC, 1A, 18RTB |

Table 5-11 Analogue IO Module (of Crevis)

| No. | Model Name | Specification |
|---|---|---|
| 1 | M3534 | Analog Input 4ch Voltage, -10 to 10VDC, 14 bits |
| 2 | M4534 | Analog Output 4ch Voltage, -10 to 10VDC, 14 bits |

Table 5-12 Pulse Measuring Module (of Crevis)

| No. | Model Name | Specification |
|---|---|---|
| 1 | M5112 | High-speed counter, 2 Channels, 24VDC, 18RTB (Open Collector) |
| 2 | M5102 | High-speed counter, 2 Channels, 5VDC, 18RTB (RS422 Differential) |

Table 5-13 Serial Communication Module (of Crevis)

| No. | Model Name | Specification |
|---|---|---|
| 1 | M5212 | RS232 Serial Interface, 2 Channels Full Duplex |
| 2 | M5232 | RS485 Serial Interface, 2 Channels Full Duplex |

## 5.4. Option Safety IO Module(BD680)

### 5.4.1. Overview

The optional safety IO module (BD680) is used when additional safety IO signals are required.
When applying the robot controller to the field, if additional safety IO signals are required, this module can be mounted on the servo/safety module (BD642). The BD680 cannot be used independently and can operate by connecting to the BD642 via a board-to-board connector through power supply, control signals, and interface connections.
Safety IO signals consist of 8-point digital input signals and 8-point digital output signals.

### 5.4.2. Connector

The figure below shows the position of each connector required for external connections to the optional safety IO module (BD680). Also, the table below describes the name and function of each connector.

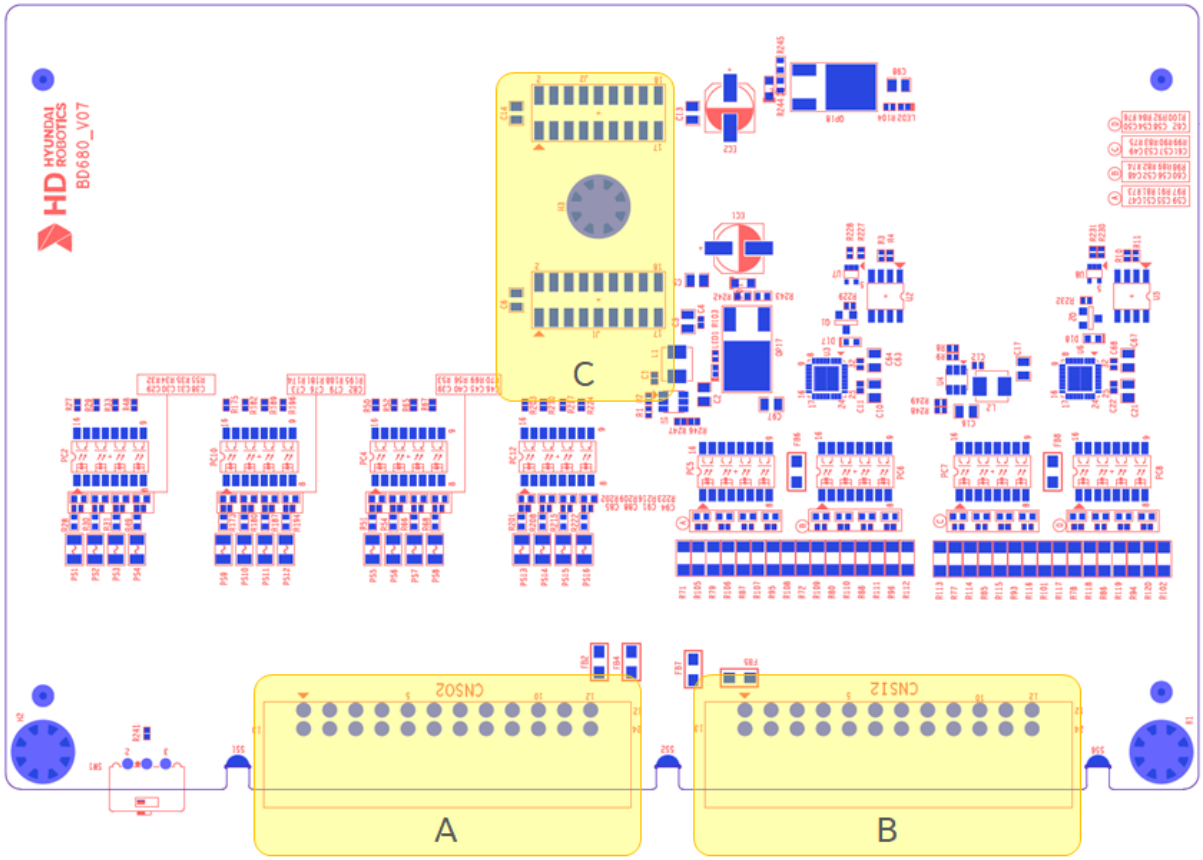


Figure 5.6 Connector Layout of Optional Safety IO Module (BD680)

Table 5-14 Connector Name, Function, and External Connection Device of Optional Safety IO Module (BD680)

| No. | Name | Usage | Connection |
|---|---|---|---|
| A | CNSO2 | Safety output terminal | External device |
| B | CNSI2 | Safety input terminal | External device |
| C | J1<br>J2 | BD642 connection connector (board-to-board) | Servo/Safety module (BD642) |

| | |
|---|---|
| ⚠ Caution | If activated by connecting safety-related inputs, be sure to check whether the functions operate normally by referring to "1.11. Safety Measures for Robot Operation." |

### 5.4.3. Device for display

(1) Top surface display of the board

The figure below shows the position of each display device (LED) on the optional safety IO module (BD680). The table below describes the information of each display.

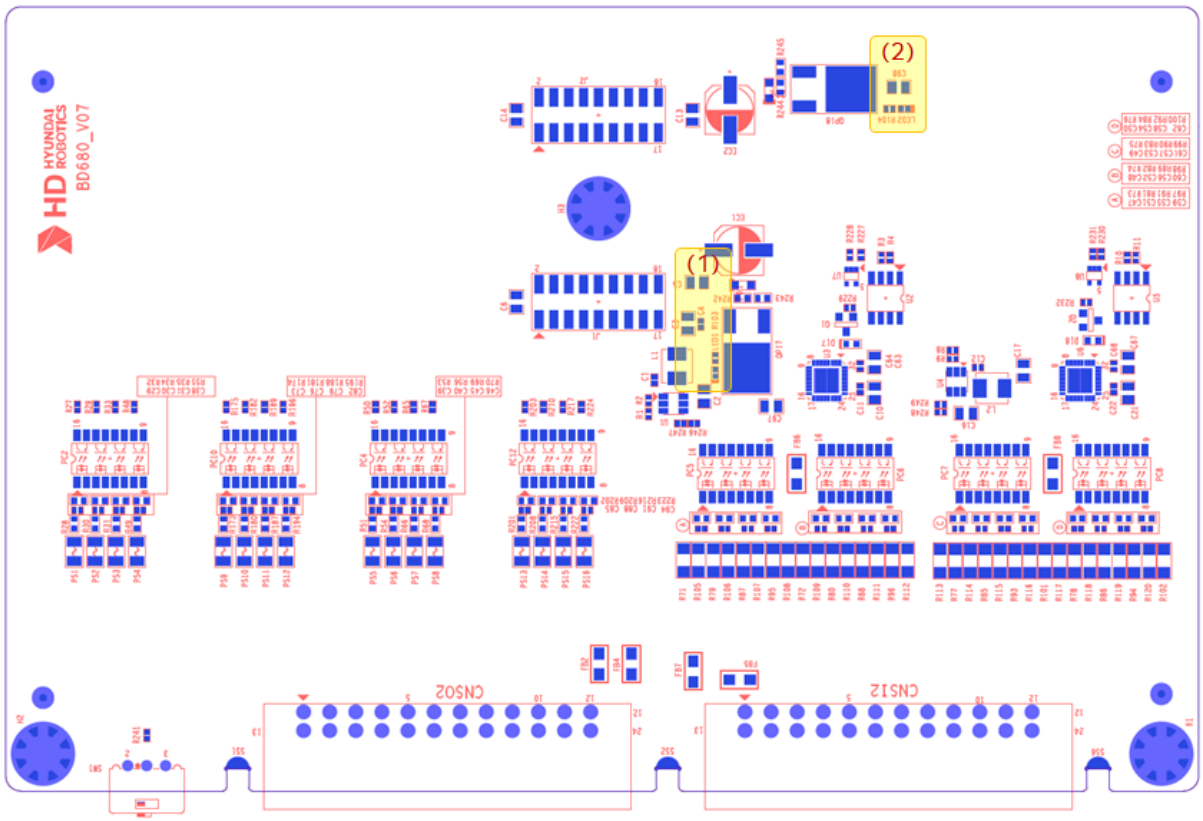


Figure 5.7 Display Device Layout of Optional Safety IO Module (BD680)

Table 5-15 Display Device Description of Optional Safety IO Module (BD680)

| No. | Name | Description | Color | Normal Condition | Actions against Abnormal Condition |
|---|---|---|---|---|---|
| (1) | LED1 | A channel power display | Yellow | ON | Symptom: Yellow LED OFF<br>Cause: A channel input power is abnormal.<br>Action 1: Check the A channel input power (24 V).<br>Action 2: Check the fuse (FS1). |
| (2) | LED2 | B channel power display | Yellow | ON | Symptom: Yellow LED OFF<br>Cause: B channel input power is abnormal.<br>Action 1: Check the B channel input power (24 V).<br>Action2: Check the fuse (FS2). |

(2) Front display device of the board

The figure below shows the front display device of the optional safety IO module (BD680). The table below describes the information of each display.

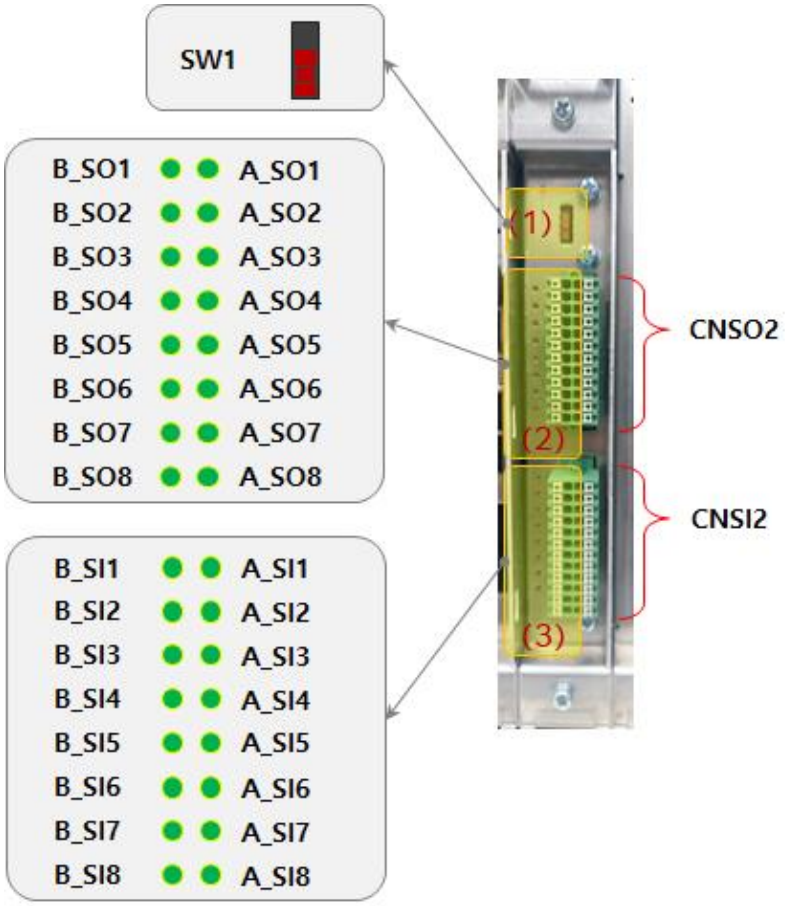


Figure 5.8 Front Display Layout of Optional Safety IO Module (BD680)

Table 5-16 Front Display Description of Optional Safety IO Module (BD680)

| No. | Name | Description | Color | Display State | Display Description |
|---|---|---|---|---|---|
| (1) | SW1 | | | | For future use |
| (2) | A_SOx (x=1~8) | A channel safety output x state display | Green | ON<br>OFF | Each channel safety output x ON state<br>Each channel safety output x OFF state |
| | B_SOx (x=1~8) | B channel safety output x state display | | | |
| (3) | A_SIx (x=1~8) | A channel safety input x state | Green | ON<br>OFF | Each channel safety input x ON<br>Each channel safety input x OFF |
| | B_SIx (x=1~8) | B channel safety input x state | | | |

### 5.4.4. Device for setting

The figure below shows the position of each setting device (switch) on the optional safety IO module (BD680). The table below describes the function of each setting.

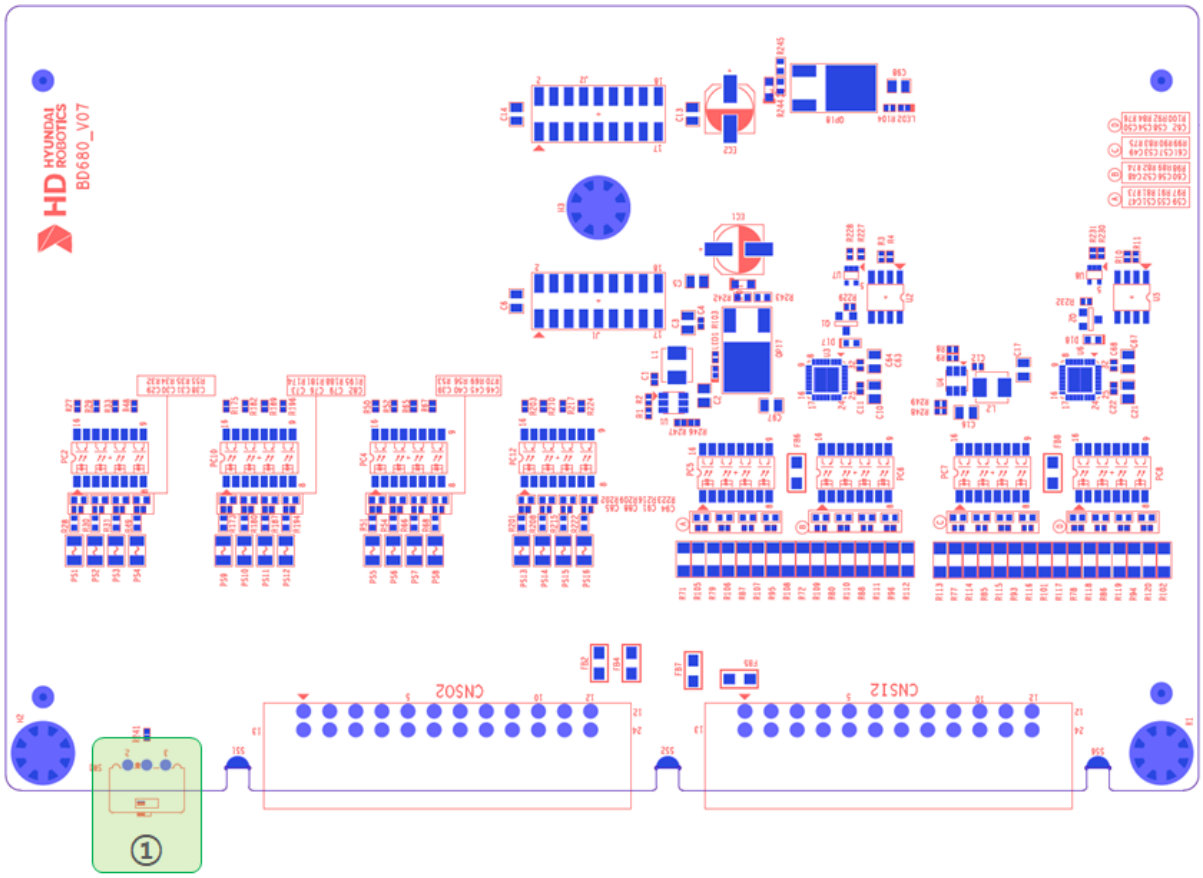


Figure 5.9 Setting Device Layout of Optional Safety IO Module (BD680)

Table 5-17 SW1 Setting Device Description of Optional Safety IO Module (BD680)

| No. | Name | Setting State | Description | Remarks |
|---|---|---|---|---|
| ① | SW1 | - | - | For future use |

### 5.4.5. Connection for safety output

| | |
|---|---|
| ⚠ Caution | Before performing safety output wiring work, turn the controller power OFF. |

The figure below shows the actual photo of the optional safety IO module (BD680) and the position of each connector when viewed from the front during installation.

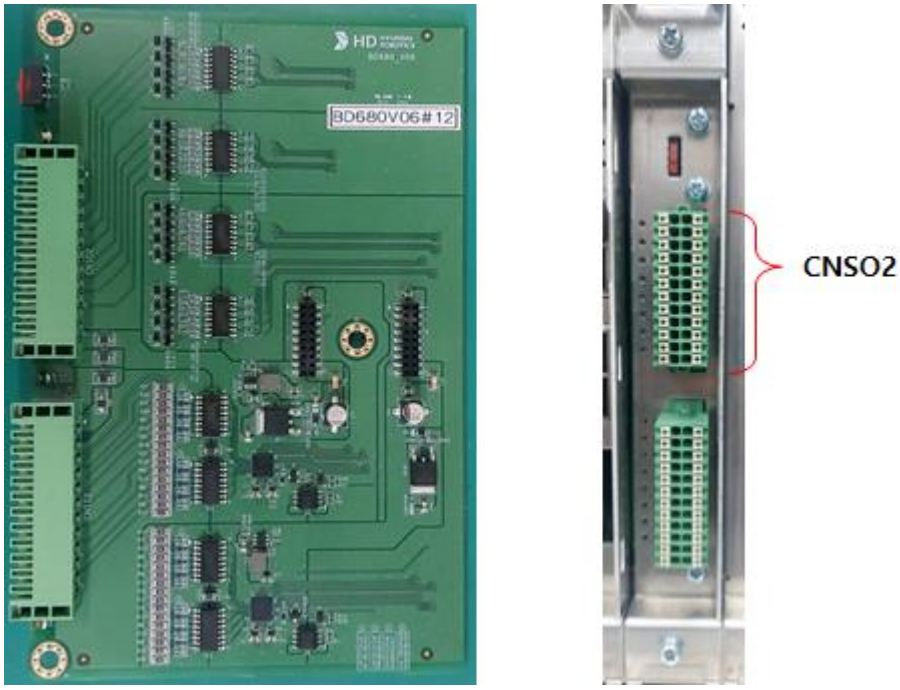


Figure 5.10 Actual Photo of Optional Safety IO Module (BD680), and Position of Safety Output Connector

The wiring of safety outputs differs depending on whether to use an internal power supply or an external power supply. The following shows the wiring for each case.

(1) When using the internal power supply

In the figure below, red lines represent A channel and blue lines represent B channel.

When using the internal power of A channel, connect pins 1–2 and pins 11–12 of CNSO2 as shown in the figure below.

When using the internal power of B channel, connect pins 13–14 and pins 23–24 of CNSO2 as shown in the figure below.

For connection with external devices, refer to the wiring examples below:

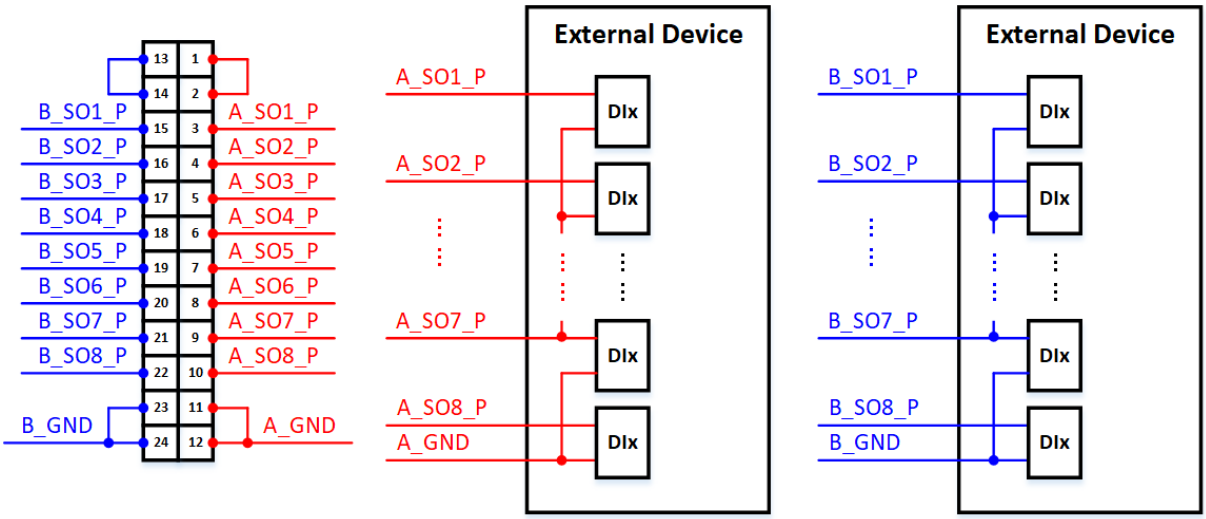


Figure 5.11 Safety Output Wiring with Internal Power Supply for Optional Safety IO Module (BD680)

(2) When using the external power supply

In the figure below, red lines represent A channel and blue lines represent B channel.

Do not connect pins 1, 12, 13, and 24 of CNSO2.

Connect A channel external power EX_AV (24 V) to pin 2 and EX_AG (GND) to pin 11.

Connect B channel external power EX_BV (24 V) to pin 14 and EX_BG (GND) to pin 23.

For connection with external devices, refer to the wiring examples below:

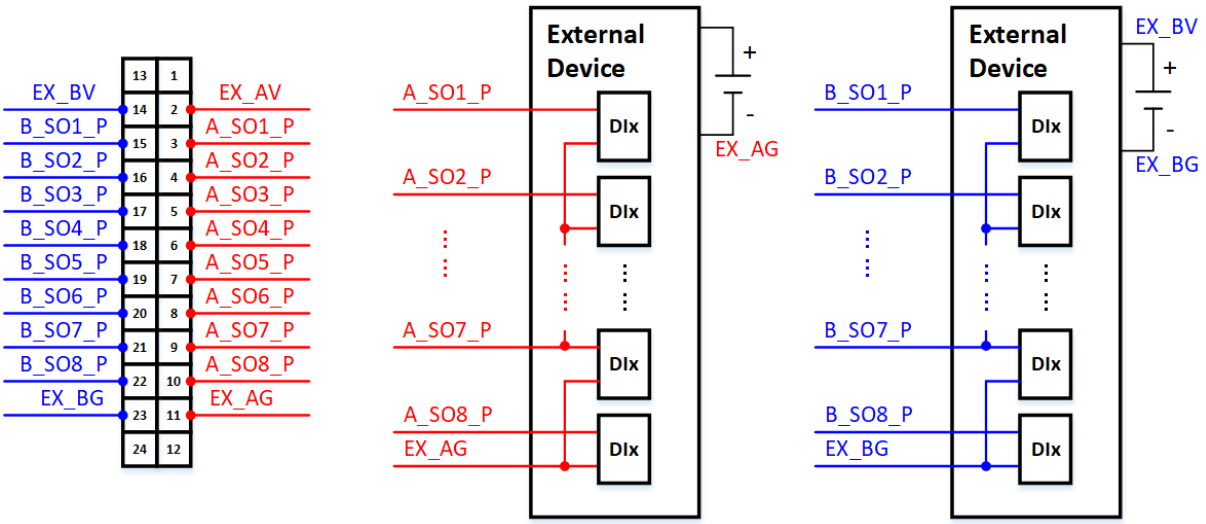


Figure 5.12 Safety Output Wiring with External Power Supply for Optional Safety IO Module (BD680)

### 5.4.6. Connection for safety inpit

| | |
|---|---|
| ⚠ Caution | Before performing safety input wiring work, turn the controller power OFF. |

The figure below shows the actual photo of the optional safety IO module (BD680) and the position of each connector when viewed from the front during installation.

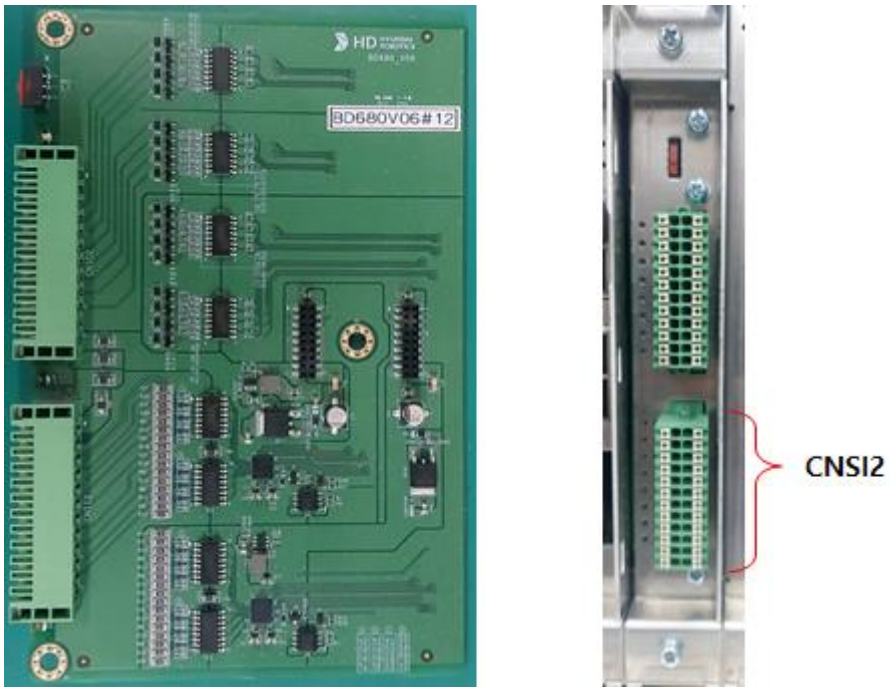


Figure 5.13 Actual Photo of Optional Safety IO Module (BD680), and Position of Safety Input Connector

The wiring of safety inputs differs depending on whether to use an internal power supply or an external power supply, and also according to the NPN/PNP type. The following shows the wiring for each case.

(1) When using the internal power supply

- NPN-TYPE(: Active Low)
  In the figure below, red lines represent A channel and blue lines represent B channel.
  When using the internal power of A channel, connect pins 1–3 of CNSI2 as shown in the figure below.
  When using the internal power of B channel, connect pins 13–15 of CNSI2 as shown in the figure below.
  For connection with external devices, refer to the wiring examples below:

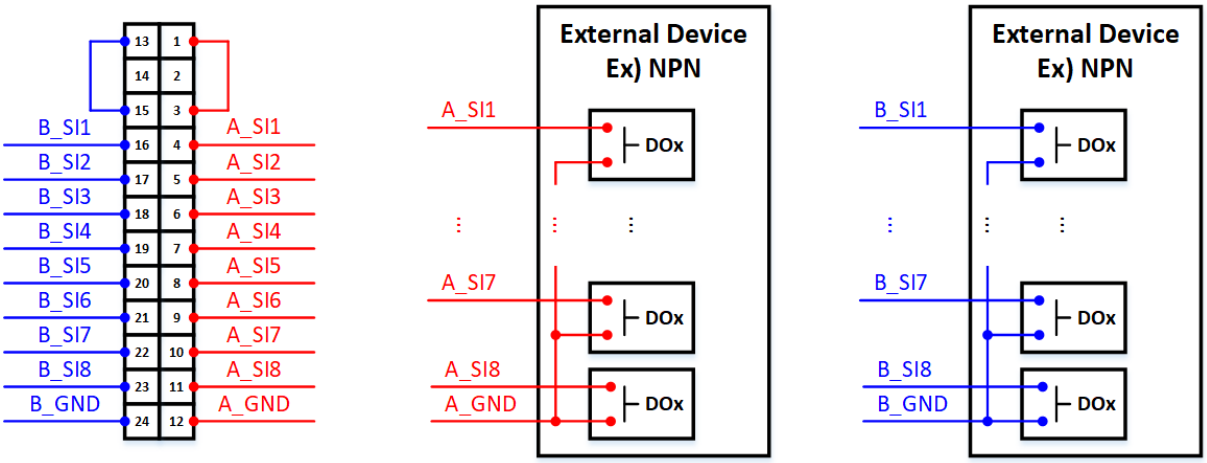


Figure 5.14 Safety Input Wiring with Internal Power Supply (NPN Type) for Optional Safety IO Module (BD680)

- PNP-TYPE(: Active High)
  In the figure below, red lines represent A channel and blue lines represent B channel.
  When using the internal power of A channel, connect pins 3–12 of CNSI2 as shown in the figure below.
  When using the internal power of B channel, connect pins 15–24 of CNSI2 as shown in the figure below.
  For connection with external devices, refer to the wiring examples below:

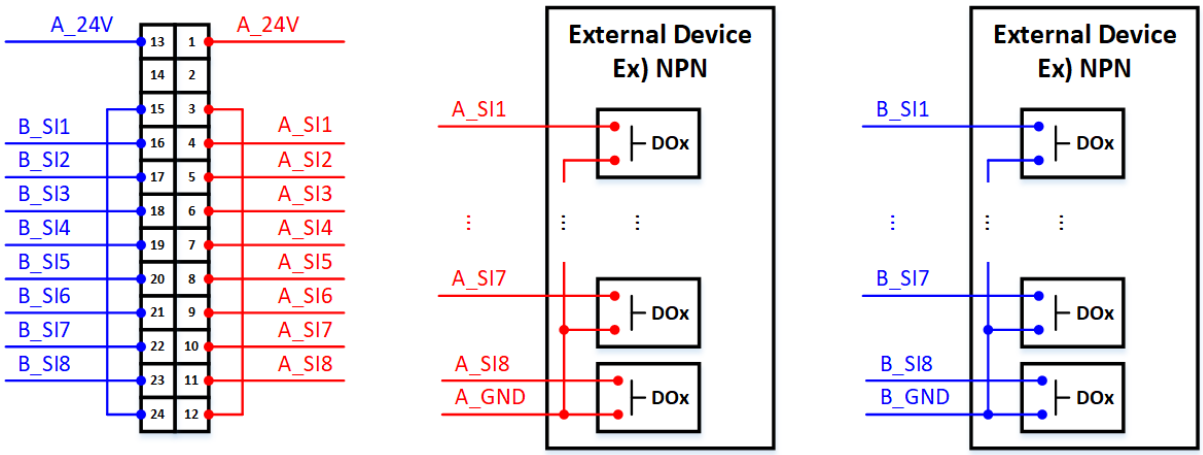


Figure 5.15 Safety Input Wiring with Internal Power Supply (PNP Type) for Optional Safety IO Module (BD680)

| | |
|---|---|
| ⚠ Caution | When wiring the internal power to external devices, do not use it as the power source for them. |

(2) When using the external power supply

- NPN-TYPE(: Active Low)

  In the figure below, red lines represent A channel and blue lines represent B channel.
  When using the external power of A channel, do not connect pins 1 and 12 of CNSI2, and connect the external power (EX_AV) to pin 3.
  When using the external power of B channel, do not connect pins 13 and 24 of CNSI2, and connect the external power (EX_BV) to pin 15.
  For connection with external devices, refer to the wiring examples below:

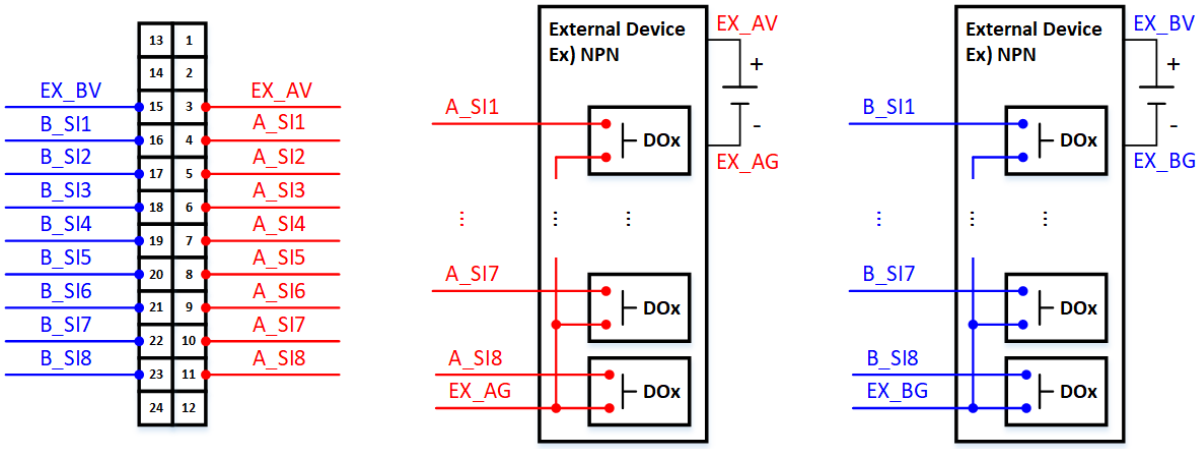


Figure 5.16 Safety Input Wiring with External Power Supply (NPN Type) for Optional Safety IO Module (BD680)

- PNP-TYPE(: Active High)

  In the figure below, red lines represent A channel and blue lines represent B channel.
  When using the external power of A channel, do not connect pins 1 and 12 of CNSI2, and connect the external power (EX_AG) to pin 3.
  When using the external power of B channel, do not connect pins 13 and 24 of CNSI2, and connect the external power (EX_BG) to pin 15.
  For connection with external devices, refer to the wiring examples below:

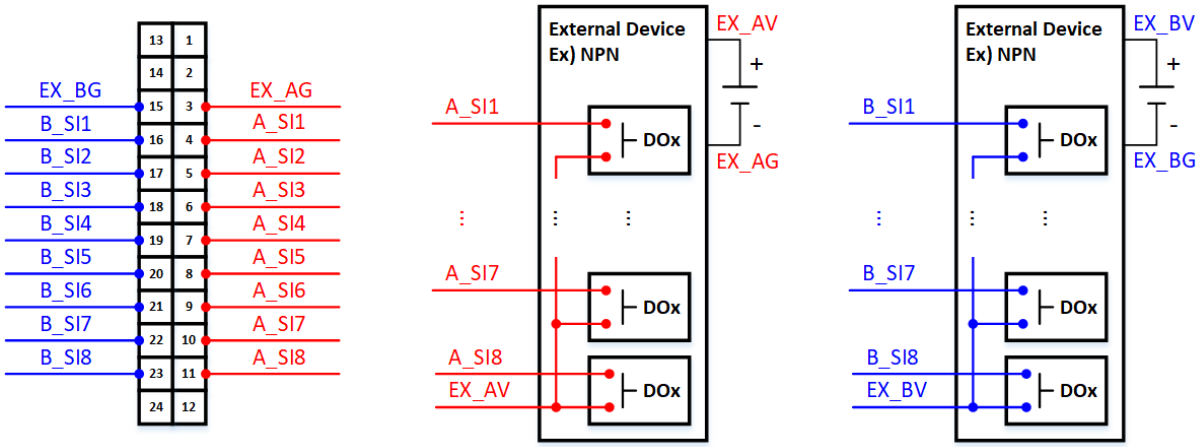


Figure 5.17 Safety Input Wiring with External Power Supply (PNP Type) for Optional Safety IO Module (BD680)

## 5.5. User DIO

### 5.5.1. Overview

In Hi7, the 'user DIO board (BD681)' and 'extended DIO board (BD682)' can be used to handle general-purpose I/O signals and synchronize conveyor encoders.

| ⚠ Caution | In this manual, DIO refers to Digital Input and Output. |
|---|---|

The 'extended DIO board (BD682)' cannot be used independently and should be used together with the 'user DIO board (BD681)'.

Table 5-18 Board Specifications

| No. | Board Name (Board Identifier) | Board Function |
|---|---|---|
| 1 | User DIO board (BD681) | - 16-channel general-purpose input<br>- 16-channel general-purpose output<br>- Can be used independently |
| 2 | User DIO board (BD682) | - 16-channel general-purpose input<br>- 16-channel general-purpose output<br>- 2-channel conveyor encoder<br>- Cannot be used independently (should be used with BD681) |

By using two BD681 and one BD682, up to 48 channels of input/output can be controlled.

## 5.5.2. Information of hardware

The user IO module (BD681) allows connection and configuration with various devices through digital input/output ports.
In addition, the extended IO module (BD682) allows the addition of digital I/O ports and synchronization with conveyor systems.
The basic hardware configuration of the boards is as follows:

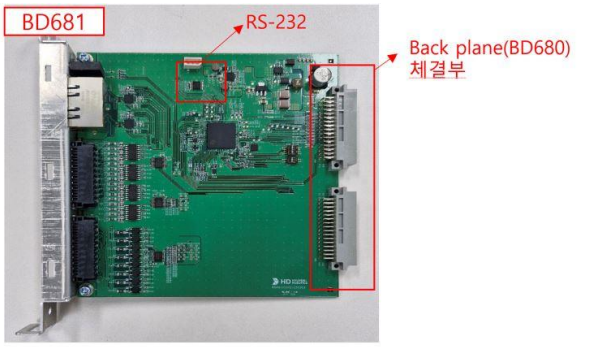


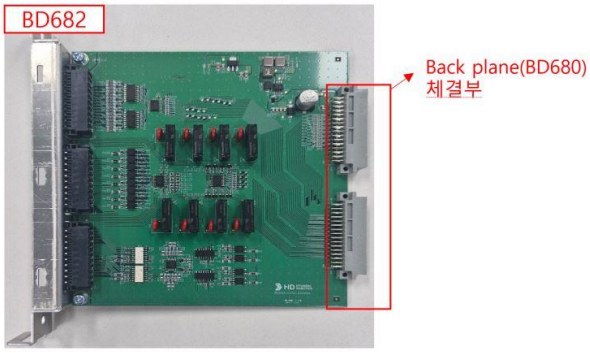


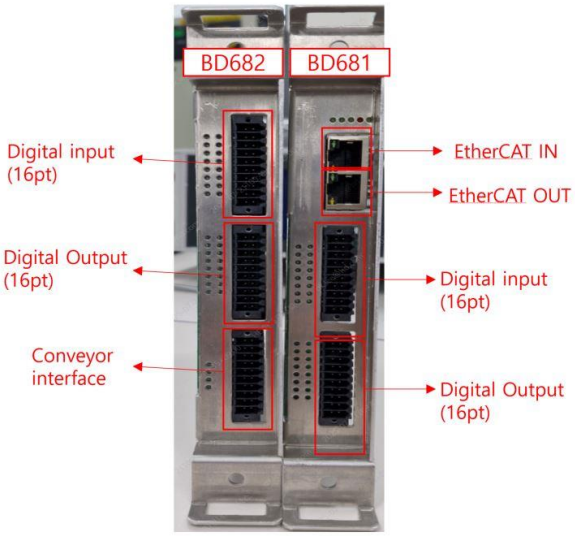

#### 5.5.2.1 Digital Imput

The following figure and table show the pin configuration of the terminal blocks for digital inputs.
Each terminal block can receive 16 input signals, supporting NPN or PNP type inputs depending on the application.
When BD682 is additionally mounted, 16 digital inputs are added.
Refer to the function manual for how to configure NPN and PNP signals.

디지털 입력 커넥터 정보

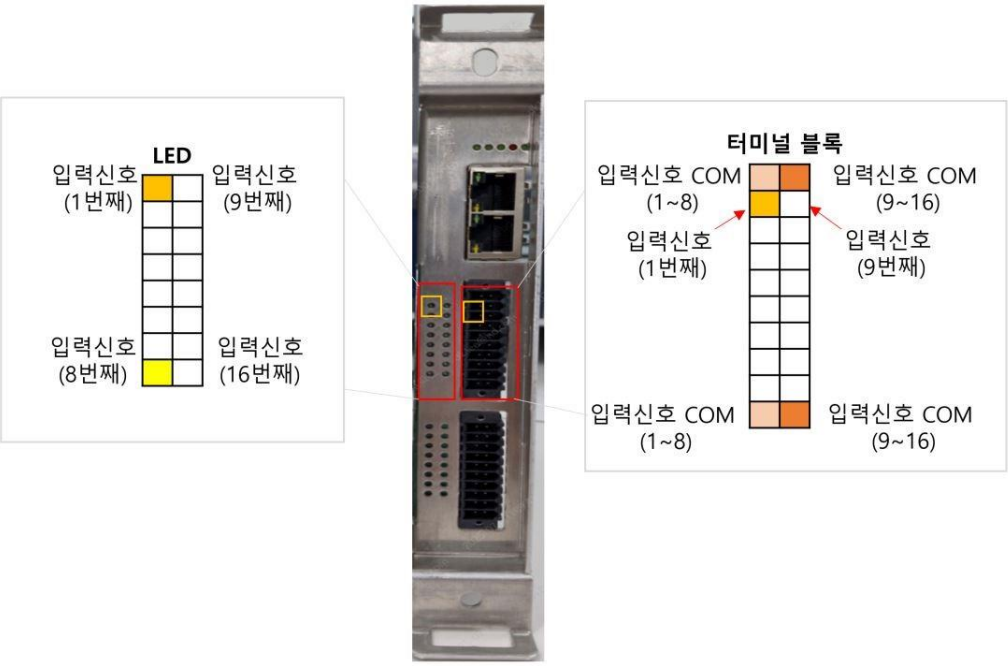


| No. | Signal Name | Description | No. | Signal Name | Description |
|---|---|---|---|---|---|
| 1 | COM_IN_A | COM signal (1~8) | 11 | COM_IN_B | COM signal (9~16) |
| 2 | A1 | Digital input 1 | 12 | B1 | Digital input 9 |
| 3 | A2 | Digital input 2 | 13 | B2 | Digital input 10 |
| 4 | A3 | Digital input 3 | 14 | B3 | Digital input 11 |
| 5 | A4 | Digital input 4 | 15 | B4 | Digital input 12 |
| 6 | A5 | Digital input 5 | 16 | B5 | Digital input 13 |
| 7 | A6 | Digital input 6 | 17 | B6 | Digital input 14 |

| | | | | | |
|---|---|---|---|---|---|
| 8 | A7 | Digital input 7 | 18 | B7 | Digital input 15 |
| 9 | A8 | Digital input 8 | 19 | B8 | Digital input 16 |
| 10 | COM_IN_A | COM signal (1~8) | 20 | COM_IN_B | COM signal (9~16) |

When extended DIO board (BD682) is additionally mounted, the pin map is as follows:

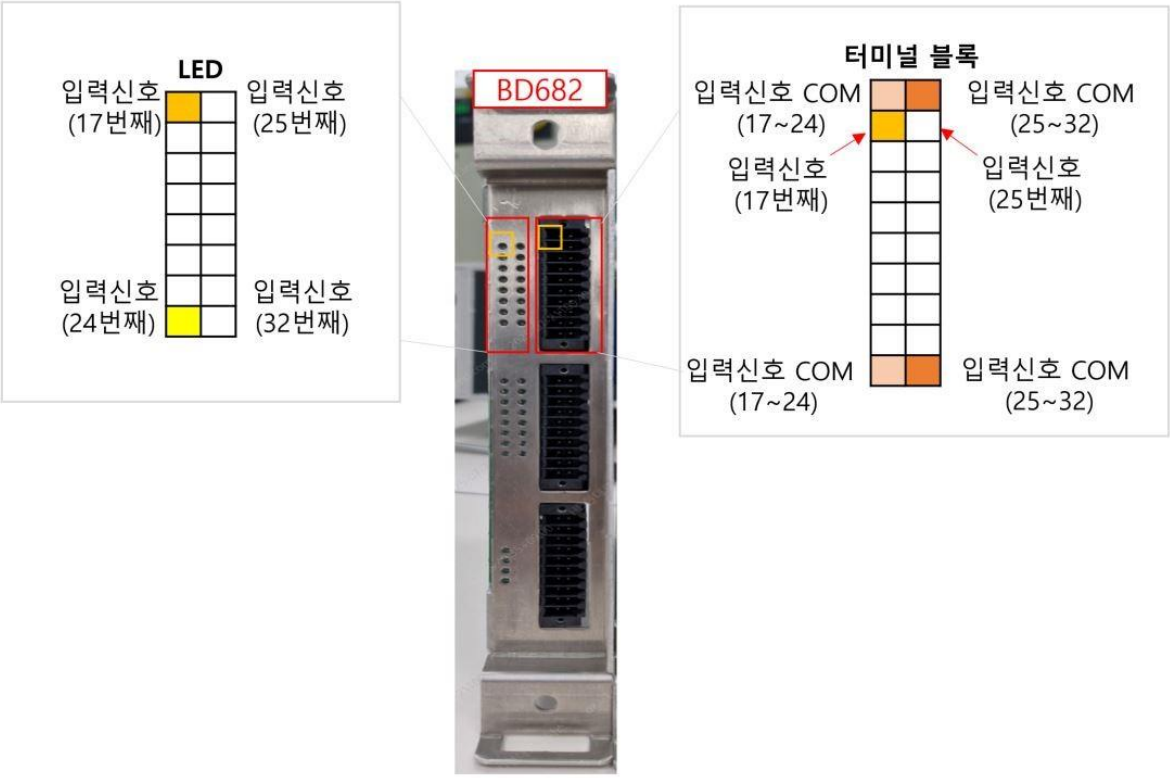


| No. | Signal Name | Description | No. | Signal Name | Description |
|---|---|---|---|---|---|
| 1 | COM_IN_A | COM signal (17~24) | 11 | COM_IN_B | COM signal (25~32) |
| 2 | A9 | Digital input 17 | 12 | B9 | Digital input 25 |
| 3 | A10 | Digital input 18 | 13 | B10 | Digital input 26 |
| 4 | A11 | Digital input 19 | 14 | B11 | Digital input 27 |
| 5 | A12 | Digital input 20 | 15 | B12 | Digital input 28 |
| 6 | A13 | Digital input 21 | 16 | B13 | Digital input 29 |

| | | | | | |
|---|---|---|---|---|---|
| 7 | A14 | Digital input 22 | 17 | B14 | Digital input 30 |
| 8 | A15 | Digital input 23 | 18 | B15 | Digital input 31 |
| 9 | A16 | Digital input 24 | 19 | B16 | Digital input 32 |
| 10 | COM_IN_A | COM signal (17~24) | 20 | COM_IN_B | COM signal (25~32) |

### 5.5.2.2 Digital Output

The following figure and table show the pin configuration of the terminal blocks for digital outputs.
Each terminal block can transmit 16 output signals, supporting NPN or PNP type outputs depending on the application.
When BD682 is additionally mounted, 16 digital outputs are added.

디지털 출력 커넥터 정보

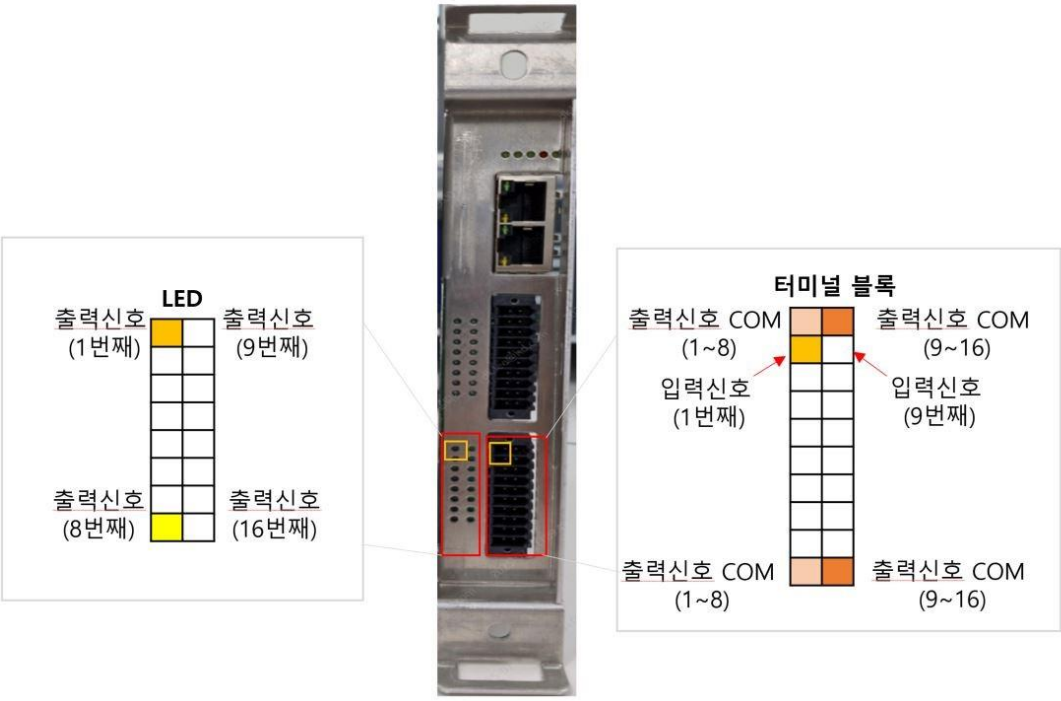


| No. | Signal Name | Description | No. | Signal Name | Description |
|---|---|---|---|---|---|
| 1 | COM_OUT_A | COM signal (1~8) | 11 | COM_OUT_B | COM signal (9~16) |
| 2 | A1 | Digital Output 1 | 12 | B1 | Digital Output 9 |
| 3 | A2 | Digital Output 2 | 13 | B2 | Digital Output 10 |
| 4 | A3 | Digital Output 3 | 14 | B3 | Digital Output 11 |
| 5 | A4 | Digital Output 4 | 15 | B4 | Digital Output 12 |
| 6 | A5 | Digital Output 5 | 16 | B5 | Digital Output 13 |
| 7 | A6 | Digital Output 6 | 17 | B6 | Digital Output 14 |

| | | | | | |
|---|---|---|---|---|---|
| 8 | A7 | Digital Output 7 | 18 | B7 | Digital Output 15 |
| 9 | A8 | Digital Output 8 | 19 | B8 | Digital Output 16 |
| 10 | COM_OUT_A | COM signal (1~8) | 20 | COM_OUT_B | COM signal (9~16) |

When extended DIO board (BD682) is additionally mounted, the pin map is as follows:

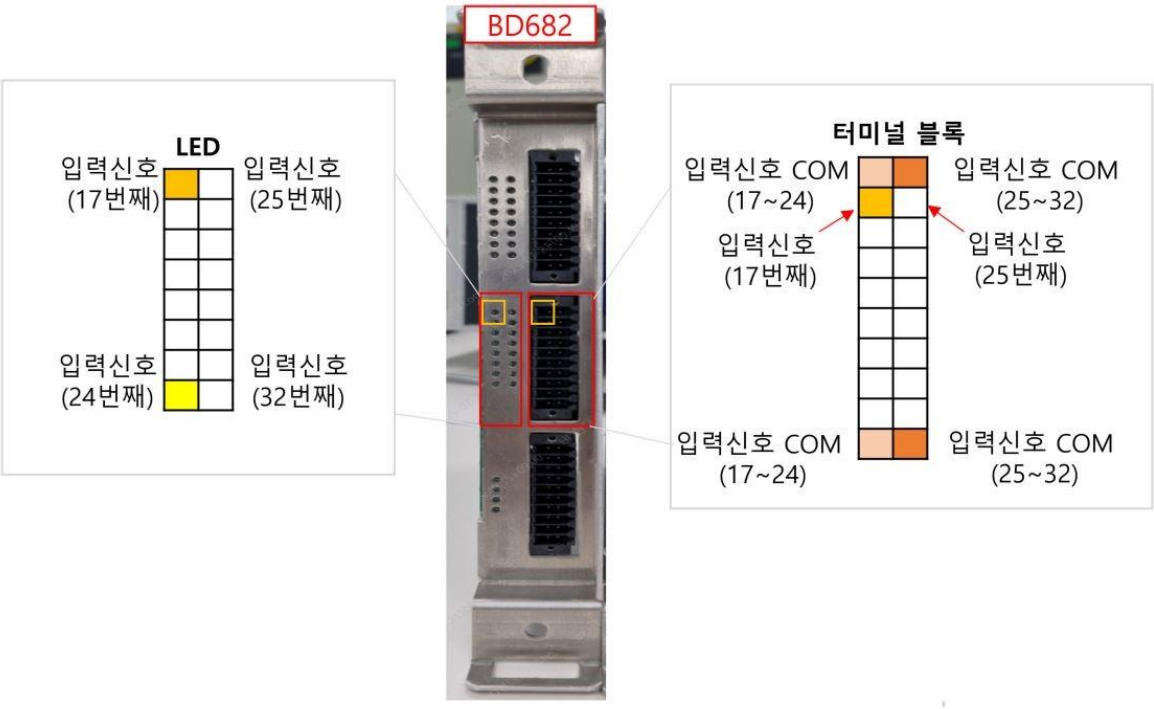


| No. | Signal Name | Description | No. | Signal Name | Description |
|---|---|---|---|---|---|
| 1 | COM_OUT_A | COM signal (17~24) | 11 | COM_OUT_B | COM signal (25~32) |
| 2 | A9 | Digital Output 17 | 12 | B9 | Digital Output 25 |
| 3 | A10 | Digital Output 18 | 13 | B10 | Digital Output 26 |
| 4 | A11 | Digital Output 19 | 14 | B11 | Digital Output 27 |
| 5 | A12 | Digital Output 20 | 15 | B12 | Digital Output 28 |
| 6 | A13 | Digital Output 21 | 16 | B13 | Digital Output 29 |
| 7 | A14 | Digital Output 22 | 17 | B14 | Digital Output 30 |

| | | | | | |
|---|---|---|---|---|---|
| 8 | A15 | Digital Output 23 | 18 | B15 | Digital Output 31 |
| 9 | A16 | Digital Output 24 | 19 | B16 | Digital Output 32 |
| 10 | COM_OUT_A | COM signal (17~24) | 20 | COM_OUT_B | COM signal (25~32) |

#### 5.5.2.3 Conveyor

The following figure shows the configuration for conveyor synchronization with encoder inputs and limit switches.

It consists of a total of two input channels. Each channel supports two types of encoders (open collector/line driver).

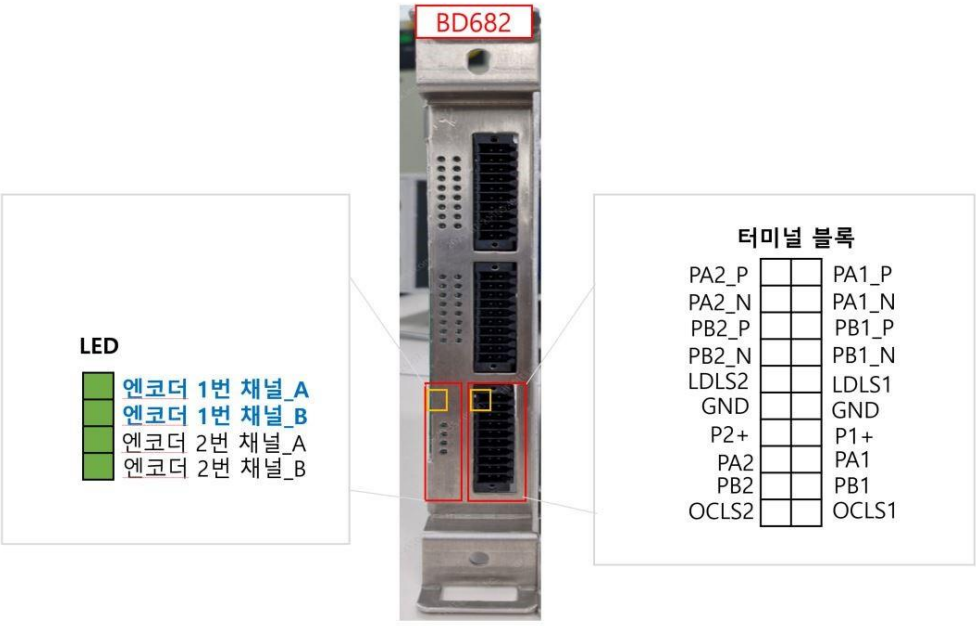


| No. | Signal Name | Description | No. | Signal Name | Description |
|---|---|---|---|---|---|
| 1 | PA2_P | Channel 2 line driver type encoder<br>A signal input positive | 11 | PA1_P | Channel 1 line driver type encoder<br>A signal input positive |
| 2 | PA2_N | Channel 2 line driver type encoder<br>A signal input negative | 12 | PA1_N | Channel 1 line driver type encoder<br>A signal input negative |
| 3 | PB2_P | Channel 2 line driver type encoder<br>B signal input positive | 13 | PB1_P | Channel 1 line driver type encoder<br>B signal input positive |
| 4 | PB2_N | Channel 2 line driver type encoder<br>B signal input negative | 14 | PB1_N | Channel 2 line driver type encoder<br>B signal input negative |
| 5 | LDLS2 | Channel 2 line driver type encoder<br>Limit switch | 15 | LDLS1 | Digital Output 28 |
| 6 | GND | Ground | 16 | GND | Ground |
| 7 | P2+ | Channel 2 open collector encoder power | 17 | P1+ | Channel 1 open collector encoder power |

| | | | | | |
|---|---|---|---|---|---|
| 8 | A2 | Channel 2 open collector type encoder<br>A signal input | 18 | A1 | Channel 1 open collector type encoder<br>A signal input |
| 9 | B2 | Channel 2 open collector type encoder<br>B signal input | 19 | B1 | Channel 1 open collector type encode<br>B signal input |
| 10 | OCLS2 | Channel 2 open collector type encoder<br>Limit switch | 20 | OCLS1 | Channel 1 open collector type encoder<br>Limit switch |

## 5.6. Safety communication board(BD671)

### 5.6.1. Overview

In Hi7, using the **'PROFIsafe board (BD671)'** allows processing of safety-related signals. This board is based on the PROFIsafe communication protocol and supports transmission of safety signals over standard fieldbus networks (e.g., PROFINET).
PROFIsafe is an international safety communication standard that enables the transmission of safety-related data together with standard data on PROFIBUS/PROFINET networks.

### 5.6.2. Information of hardware

# 6

# Periodic Inspections

The periodic inspection of the controller is designed to minimize the occurrence of failures and to maintain the performance continuously. This section describes the cautions and contents of works during the periodic inspection.

## 6.1. Inspection Schedule

Inspections should be carried out according to the schedule shown in the figure below. Periodic inspections are designed to prevent failures in advance and to secure safety and maintain accuracy even when the controller and manipulator are used for a long time. Periodic inspections are absolutely necessary and must be conducted even during normal operation.

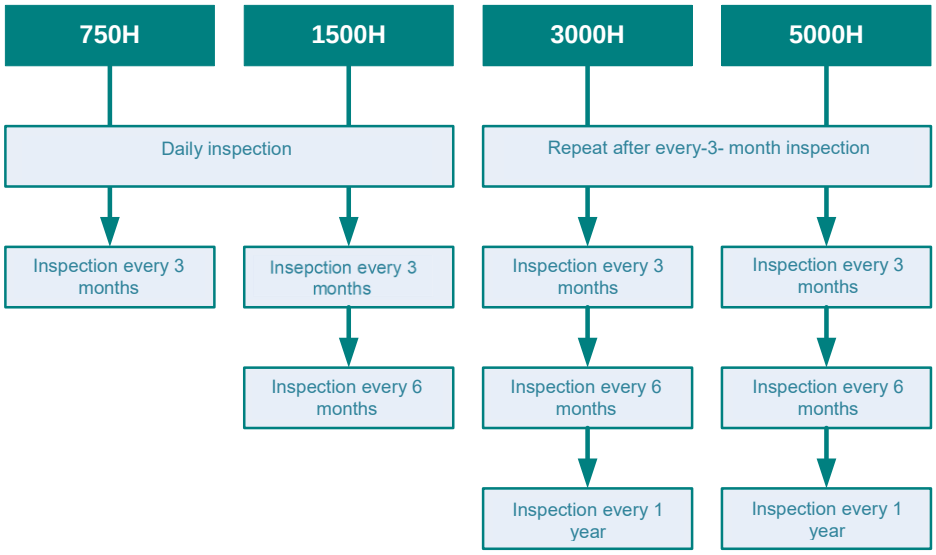


Figure 6.1 Inspection Schedule

## 6.2. General Cautions for Periodic Inspections

- The inspection work should be conducted by a person who has completed the courses implemented at the robot training center by our company.
- Before carrying out inspection works, check the parts, tools, drawings, etc. necessary for the work.
- Use the specialized replacement parts designated by our company.
- Turn off the power when inspecting the manipulator.
- When conducting works while keeping the door open, turn off the primary power and take precautions to prohibit dust, etc. to fly into the surrounding area.
- When required to touch the parts of the controller, you should take special care not to allow the IC to be destroyed by static electricity (Be careful also when contacting the connector).
- When performing periodic inspections while operating the manipulator, take precautions to prohibit anyone from entering inside the operation range.
- You should measure the voltage at a designated place and take precautions for electric shock and short-circuiting.
- Do not inspect the robot and the controller at the same time.
- After inspection, you must perform a trial-operation to check the operation of the robot before performing the normal operation.

## 6.3. General Inspections

Table 6-1 Daily Inspection

| No. | Elements to inspect | Items to inspect | Remarks |
|---|---|---|---|
| 1 | Controller | Are the display lamps normal? | Check with your own eyes. |
| | | Is the door closed properly? | Check with your own eyes. |
| | | Is there any problem with the screen of the teach pendant? | Check with your own eyes. |
| 2 | Manipulator | Is there any noise during the operation? | Listen with your own ears. |
| | | Is there any loosening of the screw at the front-end connection part? | Fasten. |
| | | Is there any scratch, contamination, or damage to the wiring and wire harness of the manipulator? | Check with your own eyes. |
| | | Is there any dirt or obstacle that causes damage to the manipulator? | Check with your own eyes, then clean. |
| 3 | Others | Is there any interference with the surrounding area of the controller and manipulator? | Check with your own eyes. |

## 6.4. First Inspection (Inspection When Reaching 750 Hours)

Table 6-2 First Inspection

| No. | Elements to Inspect | Items to Inspect | Remarks |
|---|---|---|---|
| 1 | External and main screws | Loosening of screws | Fasten. |
| 2 | Electric wiring connectors and wire harnesses of the manipulator | Loosening of connectors | Fasten. |
| 3 | Screws for fastening the dogs and limit switches | Loosening of screws | Fasten. |

## 6.5. Cyclic Inspections

Table 6-3 Cyclic Inspections

| No. | Cycle (Months) | | | Elements to Inspect | Items to Inspect | Remarks |
|---|---|---|---|---|---|---|
| | 3 | 6 | 12 | | | |
| 1 | | ◎ | ◎ | Packing of the door | ·Checking for deformation and detachment | |
| 2 | ◎ | ◎ | ◎ | Back | ·Checking dust on and rotation of the cooling fan blade part | |
| | | | | | ·Checking the regenerative discharge resistor for damage and dust | |
| | | | | | ·Checking the transformer room for any heat using the sense of touch, and then cleaning the room | |
| | | | | | ·Checking the transformer terminal block for any loosening and damage | |
| 3 | ◎ | ◎ | ◎ | Wire harness | ·Checking the connectors for any loosening and damage | |
| 4 | | ◎ | ◎ | Motor drive | ·Checking the connectors and terminals for any loosening and damage | |
| 5 | | ◎ | ◎ | Connectors of each board | ·Checking for any loosening using the sense of touch | |
| 6 | ◎ | ◎ | ◎ | Operation panel | · Checking the status of buttons and switches | |
| 7 | | ◎ | ◎ | The whole controller | ·Cleaning dust | |
| 8 | ◎ | ◎ | ◎ | Nameplate | ·Inspecting various nameplates | |
| 9 | | ◎ | ◎ | Voltage measurement | ·Voltage of the primary power | |
| | | | | | ·CNFN1 B2-C2 | |
| | | | | | CNPB1 PB-MB | |
| | | | | | ·CN24VB1 P24B-24GND | |
| 10 | | ◎ | ◎ | Grounding | ·Checking the terminals for any loosening and detachment | |
| 11 | | ◎ | ◎ | Battery | ·Checking the voltage and replacing the battery Periodically | Main board LEDs |
| 12 | ◎ | ◎ | ◎ | Teach pendant | Inspecting the exterior and checking the connector connection part | |
| | | | | | LCD Display<br>Checking the status of the LCD display | |
| | | | | | ·Checking the display of LEDs | |
| | | | | | ·Checking the status of the buttons, | |

| | | | | | | |
|---|---|---|---|---|---|---|
| | | | | | switches, and LEDs | |
| 13 | ◎ | ◎ | ◎ | Safety-related parts | ·Checking the emergency stop switch (on the controller and teach pendant) | |
| | ◎ | ◎ | ◎ | | ·Checking the main power circuit breaker switch (NFB1) | |
| | ◎ | ◎ | ◎ | | ·Checking the Enable device of the teach pendant | |
| | ◎ | ◎ | ◎ | | ·Checking the circuit protector (CP1) | |
| | ◎ | ◎ | ◎ | | ·Checking the magnetic contacts (MC1, MC2) | |
| 14 | ◎ | ◎ | ◎ | Safety-related board | ·Checking the BD630 (Connectors, LEDs) | |

## 6.6. Inspection When Going on a Long Vacation

When going on a long vacation, you should check the following items first before turning off the controller of the robot.

(1) Check whether the yellow LED (BATLOW) for battery discharge detection on the main board is turned on. The yellow LED will be turned on if there is a problem with the battery. In this case, replace the battery with a battery of rated capacity. If the controller input power is turned off while there is a problem with the battery, various programs and integer data in the board will be removed after about seven days. Therefore, you must back them up using HRView or a USB memory.

(2) Check if the door of the controller is secured.

## 6.7. Maintenance Parts

The characteristics of individual parts are described below.

**Maintenance Parts of the Category A**

| ⚠ Caution | These are the important parts to be prepared for daily maintenance and inspection. |
|---|---|

To maintain normal operation, the parts of the category A-2 and parts of the category A-3 are the minimum necessary parts, and at least one set of each group should be prepared.

Table 6-4 Inspection of Maintenance Parts of the Category A

| Type | Contents | Remarks (Reference) |
|---|---|---|
| Maintenance parts of the category A-1 | Spare parts for standard parts | |
| Maintenance parts of the category A-2 | Important backup parts | |
| Maintenance parts of the category A-3 | Periodic replacement parts | |

Table 6-5 Maintenance Parts of the Category A-1 (Spare Parts for Standard Parts)

| No. | Part name | Type | Maker | Quantity(EA) | Remarks |
|---|---|---|---|---|---|
| 1 | Fuse (F1,F2) | GP75(250V, 7.5A) | Daito | 2 | BD6C3 |
| 2 | Fuse (F3,F4) | GP75(250V, 7.5A) | Daito | 2 | BD6C3 |
| 3 | Fuse (F5,F6) | GP75(250V, 7.5A) | Daito | 2 | BD6C3 |
| 4 | Fuse(F1) | 0458007.DR(63V, 7A) | Littelfuse | 1 | BD604 |

Table 6-6 Maintenance Parts of the Category A-2 (Important Backup Parts)

| No. | Part name | Type | Maker | Quantity (EA) | Remarks |
|---|---|---|---|---|---|
| 1 | Motor drive | H6D6X<br>H6D6A | Hyundai Robotics | 1 | Medium-sized robot<br>Small-sized robot |
| 2 | Main control module | H6COM-T | Hyundai Robotics | 1 | |
| 3 | Teach pendant | TP630 | Hyundai Robotics | 1 | |
| 4 | Power supply module | H7PSM30<br>H7PSM15 | Hyundai Robotics | 1 | Large-sized robot<br>Medium-sized robot<br>Small-sized robot |
| 5 | Board | BD642 | Hyundai Robotics | 1 | Servo board |
| | | BD604 | Hyundai Robotics | 1 | Backplane board |

Table 6-7 Maintenance Parts of the Category A-3 (Periodic Replacement Parts)

| No. | Part name | Type | Maker | Quantity (EA) | Remarks |
|---|---|---|---|---|---|
| 1 | Battery (3.6V AA size) | ER6V-T1 | TOSHIBA (JAPAN) | 1 | Replace it every two years |

### Maintenance Parts of the Category B

| ⚠ Caution | These are the maintenance parts to be prepared when multiple units are purchased. |
|---|---|

Table 6-8 Maintenance Parts of the Category B

| Type | Contents | Remarks (Reference) |
|---|---|---|
| Maintenance parts of the category B-1 | Parts that should be purchased from Hyundai Robotics | |
| Maintenance parts of the category B-2 | Parts that can be purchased directly from the parts maker | |

Table 6-9 Maintenance Parts of the Category B-1 (Parts that should be purchased from Hyundai Robotics)

| No. | Part Name | Type | Maker | Quantity (EA) | Remarks |
|---|---|---|---|---|---|
| 1 | Wire harness | CMC1 | Hyundai Robotics | 1 | Large-sized/Medium-sized/Small-sized |
| | | CMC2 | Hyundai Robotics | 1 | Large-sized/Medium-sized |
| | | CEC1 | Hyundai Robotics | 1 | Large-sized/Medium-sized/Small-sized |

Table 6-10 Table 6 10 Maintenance Parts of the Category B-2 (Parts that can be purchased directly from the parts maker)

| No. | Part Name | Type | Maker | Quantity (EA) | Remarks |
|---|---|---|---|---|---|
| 1 | No fuse breaker (NFB) | - | - | 1 | |
| 2 | Magnetic contact (MC1, MC2) | - | - | 2 | |
| 3 | Circuit protector (CP1) | - | - | 1 | |

**Caution:**
**Considering that the boards are equipped with high-performance parts, take precautions about the following items for carrying out maintenance.**

### Preservation temperature 0° C-40° C / 32° F-104° F

For long-term preservation and maintaining high reliability, you should keep the temperature at 25±10° C / 77±50° C and avoid rapid temperature variation (±10° C/hour), (±50° F/hour).

### Preservation humidity 20%– 80%

For long-term preservation and maintaining high reliability, you should keep the humidity at 45%– 65% and take special care not to allow condensation to take place.

### Prevention of static electricity

If the tip of the electrode is preserved in a dry state, static electricity will be easily charged, and when the charged static electricity is discharged, the semiconductor will be easily destroyed. Therefore, when storing the substrate separately, please use antistatic wrapping paper.

### Others

It is required to store the boards in a place where there is no toxic gas, no dust, or in a place where no load will be applied.

# Appendices

## Rules on Occupational Safety and Health Standards, and Notice for Safety Inspection

The industrial robot should be installed in consideration of the inspection standards, both of the Rules on Occupational Safety and Health Standards and of the Notice for Safety Inspection (if subject to inspection).

### ■ Rules on Occupational Safety and Health Standards

Article 222 (Teaching, etc.): When it is required to perform works such as teaching (this refers to setting or changing the operation sequence, position and speed of the manipulator, or checking the result, and will be the same in the following) on the robot within the operation range of an industrial robot (hereinafter "robot"), the business owner is required to take the measures described under the following items to prevent the danger that could be caused by the unexpected operation of or mistakes in the operation of the robot. However, if the works are performed with the robot's driving source cut off, measures 1– 2 below may not be taken 〈Revised on April 7, 2016〉.

1. Establish guidelines for the following items and make sure that works are performed according to the guidelines.

   A. Robot operation method and sequence

   B. Manipulator speed during a work

   C. Signaling method when having two or more workers to carry out works

   D. Measures to take when finding an abnormality

   E. Measures to take when finding an abnormality and stopping the operation of the robot and restarting the operation

   F. Other measures necessary to prevent the danger that could be caused by the unexpected operation of or mistakes in the operation of the robot

2. Workers engaged in the works or those who monitor the workers should take measures to stop the operation of the robot immediately if an abnormality is found.

3. In the process of performing works, it is required to take measures such as putting up a marking on the start switch, for example, to indicate that works are underway, to prevent workers other than the ones currently engaged in the works from manipulating the start switch.

Article 223 (Prevention of Dangers During Operation): The business owner is required to install a fence of 1.8 m or more in height (when considering the operation range of the robot, the height can be adjusted lower if there is no danger that could occur because of the height) to prevent the risk of injuries that may occur because of the operation of the robot (excluding the operation of the robot for the teaching according to Article 222 and also the operation of the robot in compliance with conditions of Article 224). In some sections where a fence cannot be installed because of the installation of a conveyor system, etc.,

a responsive, protective device such as a safety mat or optoelectronic protective device should be installed. However, if the Minister of Employment and Labor acknowledges that the safety standard for the robot meets the safety standards set by Korean industrial standards under Article 12 of the Industrial Standardization Act or internationally accepted safety standards, it is possible to forego measures according to the text of this document.

Article 224 (Including the measures to take when performing works such as repairing): When the work such as repairing, inspecting, adjusting (excluding teaching), cleaning, refueling the robot, or confirming relevant results within the operation range of the robot is underway, the business owner should take necessary measures to ensure that the robot can be stopped. These measures include locking up the start switch of the robot using a key and managing the key separately, or putting up a signboard on the start switch, indicating that work is underway. These measures should also be taken to ensure that anyone other than the workers engaged in the work will be prevented from manipulating the start switch. However, this is not the case if work must be performed even during the operation of the robot, and, in such a situation, measures of the individual items under Article 222 are taken to prevent the danger that could be caused by an unexpected operation or mistakes in operation

【Appendix 14】Inspection Standards for Industrial Robots (Related to Article 30)

| | |
|---|---|
| Automatic operation mode | A. In the automatic operation mode, safety devices such as fences should maintain the normal function, and if a person enters the protected area, the protective stop function should be activated.<br>B. Protective stop or emergency stop should not be reset or disabled when the automatic operation mode is selected.<br>C. Automatic operation mode should be deactivated when a stop signal is given.<br>D. When the automatic mode is selected, the starting of the automatic mode should be possible only by a separate start operation outside the protected area.<br>E. Changing from automatic operation mode to other operation modes should be possible only when driving is stopped. |
| Control of the pendant | If the pendant has a string, its length should be sufficient for the teaching operator to perform the work safely. |
| Electric connection devices | Electric connection devices such as electric outlets that are to be connected to the robot should not be separated arbitrarily. |
| Control of the pendant<br>Electric connection devices<br>Robot system layout design | The layout of the robotic system for the operation area, access, and free space should be appropriate in compliance with the following items.<br>A. The maximum area of the robot should be checked first. Then, the restricted area and operation area should be set, and there should be a free space between the robot and obstacles such as pillars of the building.<br>B. A passage such as a pedestrian passage should be secured for safe movement.<br>C. Access to and from the path to the control system should be safe. |

【Appendix 14】 Inspection Standards for Industrial Robots (Related to Article 30)

| | |
|---|---|
| | D A safety passage for approaching for inspection, cleaning, repair, maintenance, etc. should be secured.<br>E. There should be no risk of slipping, tripping, or falling over because of wiring or other dangerous sources.<br>F. There should be no danger caused by the cable tray, etc.<br>G. Operation controllers and auxiliary equipment (welding controllers, pneumatic valves, etc.) that workers need to access during automatic operation should be located outside the protected area. |
| Robot system stop function | All robot systems should have a protective stop function and also a separate emergency stop function.<br>A. Emergency stop function<br>1) The robot system should have a single emergency stop function that operates for all relevant parts of the system.<br>2) In the case of multi-robots or multi-cells, the control range can be divided, and the control range should be clearly indicated using characters or symbols near the emergency stop device.<br>3) When there are more than two control positions, the emergency stop device installed in each control position should always maintain its function.<br>4) This function should take priority over all other robot controls and, in case of an emergency stop, should remove the driving power from the robot drive unit and maintain the stop state until initialization.<br>5) Initialization should be performed manually only, and restarting should not be performed immediately after initialization but should be carried out through a separate starting operation.<br>6) The performance of the emergency stop circuit should satisfy the safety-related control system performance requirements of item no. 4.<br>B. Protective stop function<br>1) The robot system should be equipped with one or more protection stop circuits for connection with external protection devices.<br>2) When activated, the protective stop circuit should be capable of stopping the robot operation, removing the actuator power, and controlling all dangerous sources controlled by the robot.<br>3) Protective stop should be started manually or by the control logic.<br>4) At least one protection stop function should utilize the 0-stop method or 1-stop method.<br>Note 1) 0-stop method: Stopping will be performed through immediate cut-off of the actuator power.<br>Note 2) 1-stop method: The power will be cut off after the machine stops while the actuator power is supplied. |

【Appendix 14】 Inspection Standards for Industrial Robots (Related to Article 30)

| | |
|---|---|
| | 5) The performance of the protective stop circuit should satisfy the safety-related control system performance requirements of item no. 4. |
| Manual resetting, starting, and restarting | The robot system should be in compliance with the following items to prevent unexpected starting.<br>A. Starting and restarting should be possible only when all safety functions and protective measures are operating normally.<br>B. If the power supply is interrupted and then resumed, a starting interlocking device should be installed to prevent the automatic starting of dangerous operations and should be reset only by manual operation.<br>C. Start and restart control should be manually operated outside the protected area and should be impossible to activate within the protected area.<br>D. The start and restart control unit should be located where the protected area can be visibly seen. However, if it is difficult to secure a view of the protected area, it is required to comply with one of the following items.<br>1) Installation of a detection device that can detect the presence of workers in the protected area<br>2) Installation of means to keep the door open<br>3) Installation of an additional device for time limit reset inside the protected area<br>4) Generation of audible and visual warning signals that can be sufficiently recognized inside the protected area, and provision of sufficient evacuation time<br>E. When it comes to complying with item no. 4 of D above, it is required to install a sufficient number of emergency stop devices in the protected area at a location that the operator can access easily. |
| Protected area, fence, etc. | Protected areas and fences should be in compliance with the following items. However, in the case of cooperative robots, some applications may be excluded, depending on the operation method.<br>A. The restricted area should be located within the protected area.<br>B. The protected area should be established using a fence. However, when it comes to an opening for taking in and out materials or parts, the protected area should be established by a responsive, protective device, etc.<br>C. The fence for the robot cell should be appropriate in compliance with the following items.<br>1) The fence should be firmly installed not to be easily damaged by external force and should be of a structure that can be removed only with tools.<br>2) If the fence has an opening for taking in and out materials or parts, it is required to physically prevent workers from accessing dangerous points under, next to, or through the opening, and if such measures are not possible, it is required to take additional measures such as using responsive, protective devices.<br>3) The height of the fence should be over 1,800 mm. However, if there is no danger that could occur because of the height, in consideration of both the operation range of the |

【Appendix 14】 Inspection Standards for Industrial Robots (Related to Article 30)

| | |
|---|---|
| | robot and the safety distance according to KS B ISO 13857, the height of the fence may be above 1,400 mm.<br>4) The movable fence (entry door) should be opened to the side or in the direction of moving away from a source of danger and should be structured in a way that it does not open toward the protected area.<br>5) An interlocking device should be installed to the movable fence (entry door), and it should be able to turn the source of danger into a safe state before the workers approach it. However, if there is a possibility of accessing the dangerous area before the source of danger is removed, there should be a locking device for the entry door, in addition to the interlocking device.<br>6) The movable fence (entry door) locking device should allow the start of the robot only when the movable fence (entry door) is closed and locked. |

## Quality Assurance

To protect the interests of customers who have purchased products manufactured by Hyundai Robotics (hereinafter the "Company") and sold by the Company or authorized distributors, the Company provides quality assurance against defects in the raw materials and in the manufacturing of products in accordance with the contents stipulated in the quality assurance. This quality assurance is provided only to the end users (hereinafter the "Customers") of the products.

■ Coverage of Quality Assurance

Robots and relevant parts are covered by the Company's quality assurance against defects in materials and manufacturing.

The Company's sole responsibility and the sole remedy for the Customer with respect to all our products are limited to the repair or replacement of our products that are directly defective at our discretion. The Company will not compensate for any indirect or incidental, special, or consequential damages, such as loss of income, loss of use, loss of production, or damage to other products or equipment resulting from defects in the product.

■ Period of Quality Assurance

The Company guarantees the quality of the product for one year from the date that the Customer purchased the product and received it on-site, or the Customer issued the acceptance certificate after completing the trial-operation. However, if the contract date is different from the delivery date (installation and trial-operation completion date), the period of quality assurance will be based on the delivery date, and when the product is replaced with a new finished product, the period of assurance will be calculated from the date of replacement.

■ Limitation of and Exception for Assurance

To maintain quality assurance, you must follow the maintenance procedures and keep records as specified by the Company. When we decide that the Customer does not comply with the terms and conditions as follows, the quality assurance will be made invalid.

- Damage to or breakdown of the product because of the Customer's carelessness, inexperience in operation, negligence, arbitrary modification, disassembly, or repair
- Failure of or damage to the product because of the use and installation of parts, consumables, software, etc. that are not certified by the company
- Failure of or damage to the product because of incompliance with the instructions and precautions in the manual
- Failure of or damage to the product because of the use for purposes other than the original purpose
- Failure of or damage to the product caused by using it in inappropriate environments, dropping the product, or applying a strong impact on the product

- Failure of or damage to the product because of the installation, repair, and maintenance by a person (customer, uncertified or unauthorized mechanic, etc.) other than an installation expert
- When the service life of a consumable part is due
- If a service request for a defect is received after the warranty period has expired

We do not provide quality assurance against damage to the product caused by external circumstances beyond our reasonable control, such as theft, willful destruction, fire, natural disasters, wars, or acts of terror. Moreover, we are not responsible for the defects in the product, operation, and performance not pertaining to the range specified in the warranty.

## Customer Support

Main Phone: +82-1670-5041 | Email: robotics@hyundai-robotics.com

Hours of Operation: Weekdays (Monday– Friday) 09:00 – 18:00 | Closed on weekends and holidays

For detailed inquiries about products or services, please contact our customer support team.

- **Daegu Office (Head Office)**

50, Techno sunhwan-ro 3-gil, yuga, Dalseong-gun, Daegu, 43022, Korea

- **GRC**

477, Bundangsuseo-ro, Bundang-gu, Seongnam-si, Gyeonggi-do, Korea

- **ARS : +82-1588-9997 (A/S center)**

- **E-mail : robotics@hyundai-robotics.com**