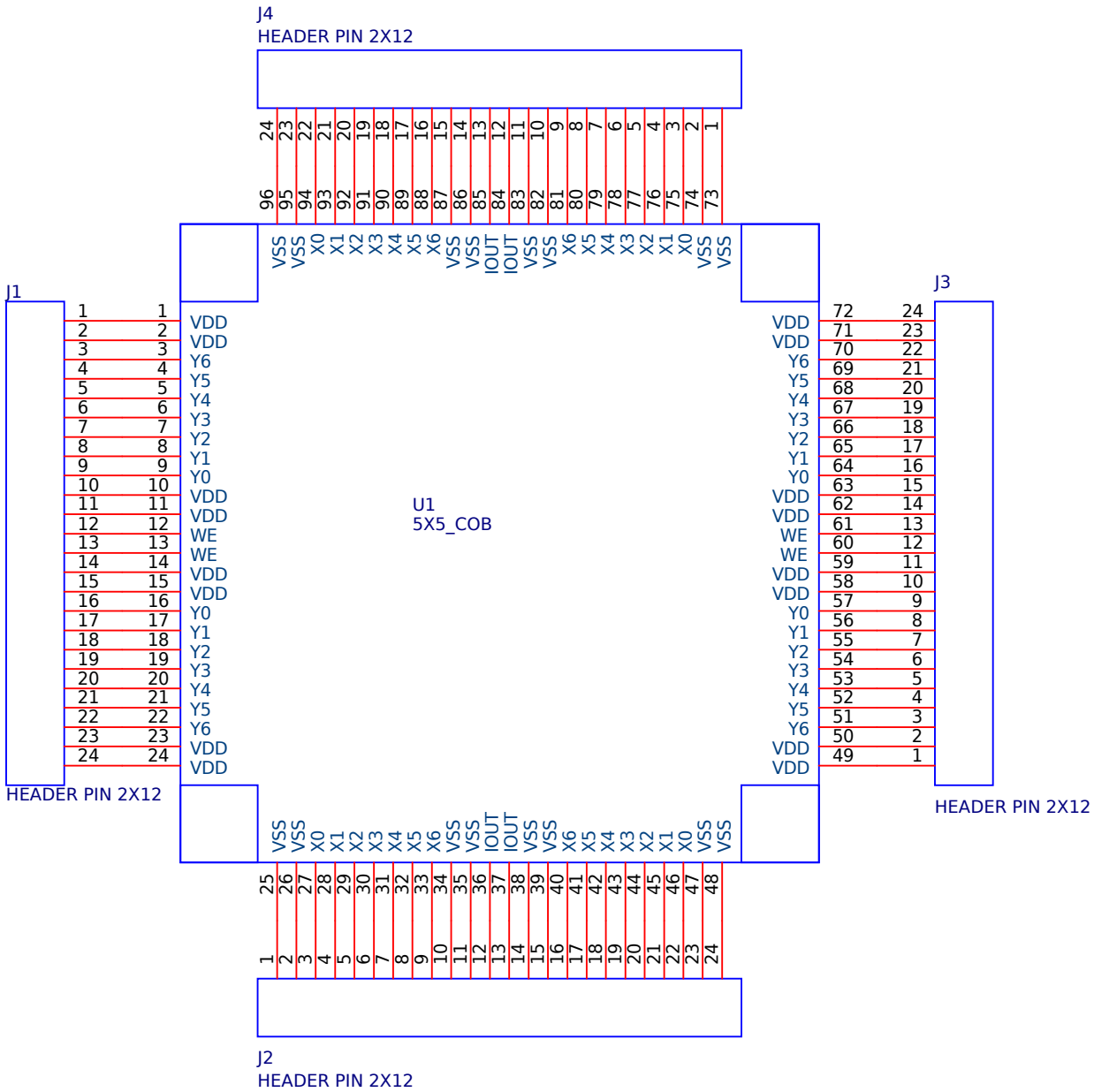

Title	5X5 COB	
Size A	Document Number .	Rev 1.0
Date: Wednesday, May 22, 2024	Sheet 1 of 1	