Compal Confidential

Schematic Document

Intel Braswell M
LA-E372P
Kefka and Sabin

2016-07-28 Rev: 0.2

ZZZ1 PCB_CAV01@

PCB 1X2 LA-E372P REV0 M/B CHROME 4

DA6001OL000

Vinafix.com

ZZZ1 PCB_CAV11@

PCB 1X2 LA-E372P REV0 M/B CHROME 2

DA6001OL100

Security Classification	Compal Secret Data		
Issued Date	2014/11/10	Deciphered Date	2015/11/25

THIS SHEET OF ENGINEERING DRAWING IS THE PROPRIETARY PROPERTY OF COMPAL ELECTRONICS, INC. AND CONTAINS CONFIDENTIAL AND TRADE SECRET INFORMATION. THIS SHEET MAY NOT BE TRANSFERED FROM THE CUSTODY OF THE COMPETENT DIVISION OF R&D DEPARTMENT EXCEPT AS AUTHORIZED BY COMPAL ELECTRONICS, INC. NEITHER THIS SHEET NOR THE INFORMATION IT CONTAINS MAY BE USED BY OR DISCLOSED TO ANY THIRD PARTY WITHOUT PRIOR WRITTEN CONSENT OF COMPAL ELECTRONICS, INC.

Compal Electronics, Inc.

Title: ***P01-Cover Page***

Size: Custom | Document Number: ***LA-E372P*** | Rev: 0.2

Date: Friday, July 29, 2016 | Sheet 1 of 47

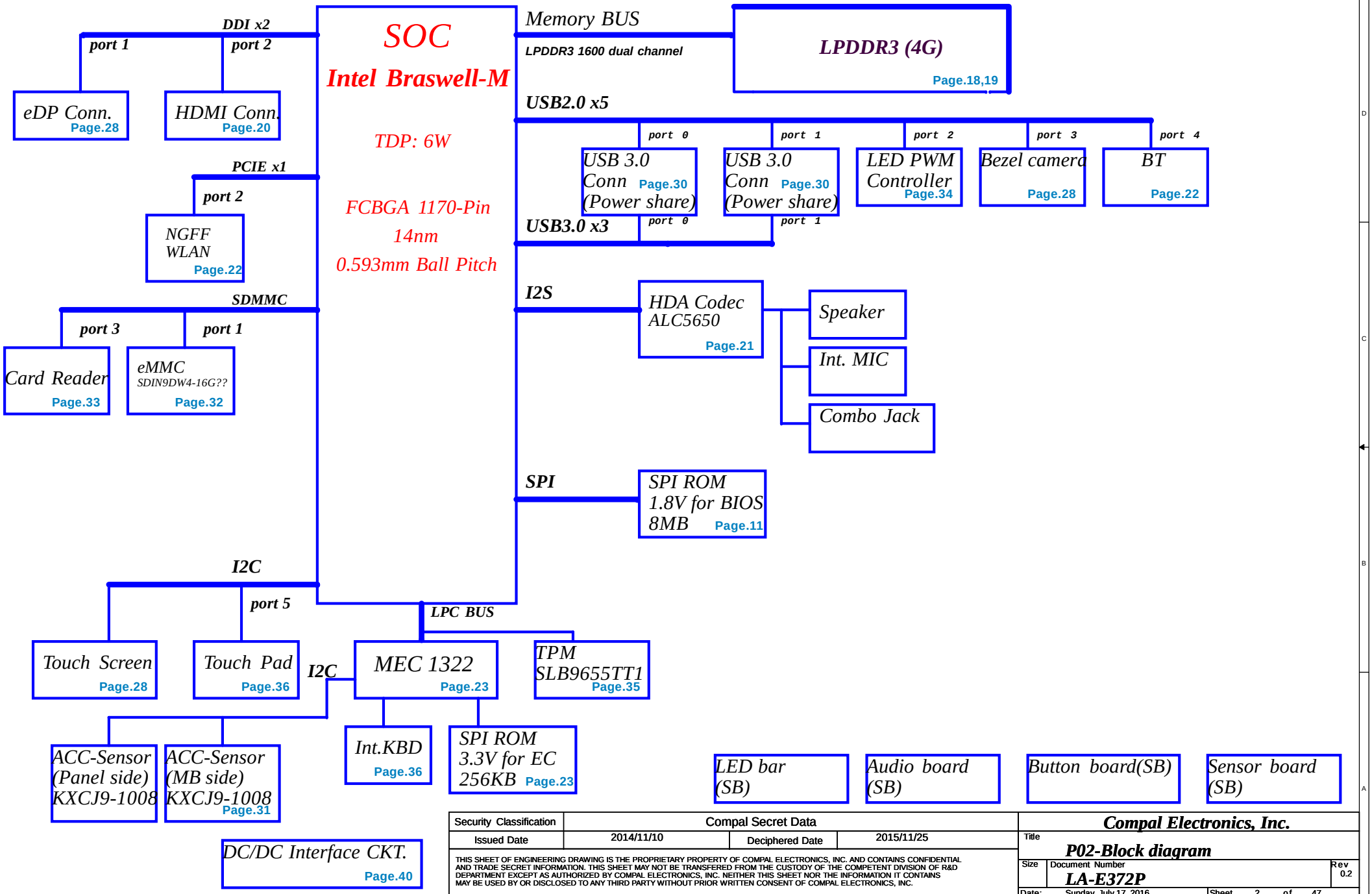

Security Classification	Compal Secret Data		
Issued Date	2014/11/10	Deciphered Date	2015/11/25

THIS SHEET OF ENGINEERING DRAWING IS THE PROPRIETARY PROPERTY OF COMPAL ELECTRONICS, INC. AND CONTAINS CONFIDENTIAL AND TRADE SECRET INFORMATION. THIS SHEET MAY NOT BE TRANSFERED FROM THE CUSTODY OF THE COMPETENT DIVISION OF R&D DEPARTMENT EXCEPT AS AUTHORIZED BY COMPAL ELECTRONICS, INC. NEITHER THIS SHEET NOR THE INFORMATION IT CONTAINS MAY BE USED BY OR DISCLOSED TO ANY THIRD PARTY WITHOUT PRIOR WRITTEN CONSENT OF COMPAL ELECTRONICS, INC.

Compal Electronics, Inc.

Title: **P02-Block diagram**

Size | Document Number: **LA-E372P** | Rev: 0.2

Date: Sunday, July 17, 2016 | Sheet 2 of 47

Vinafix.com

TBD

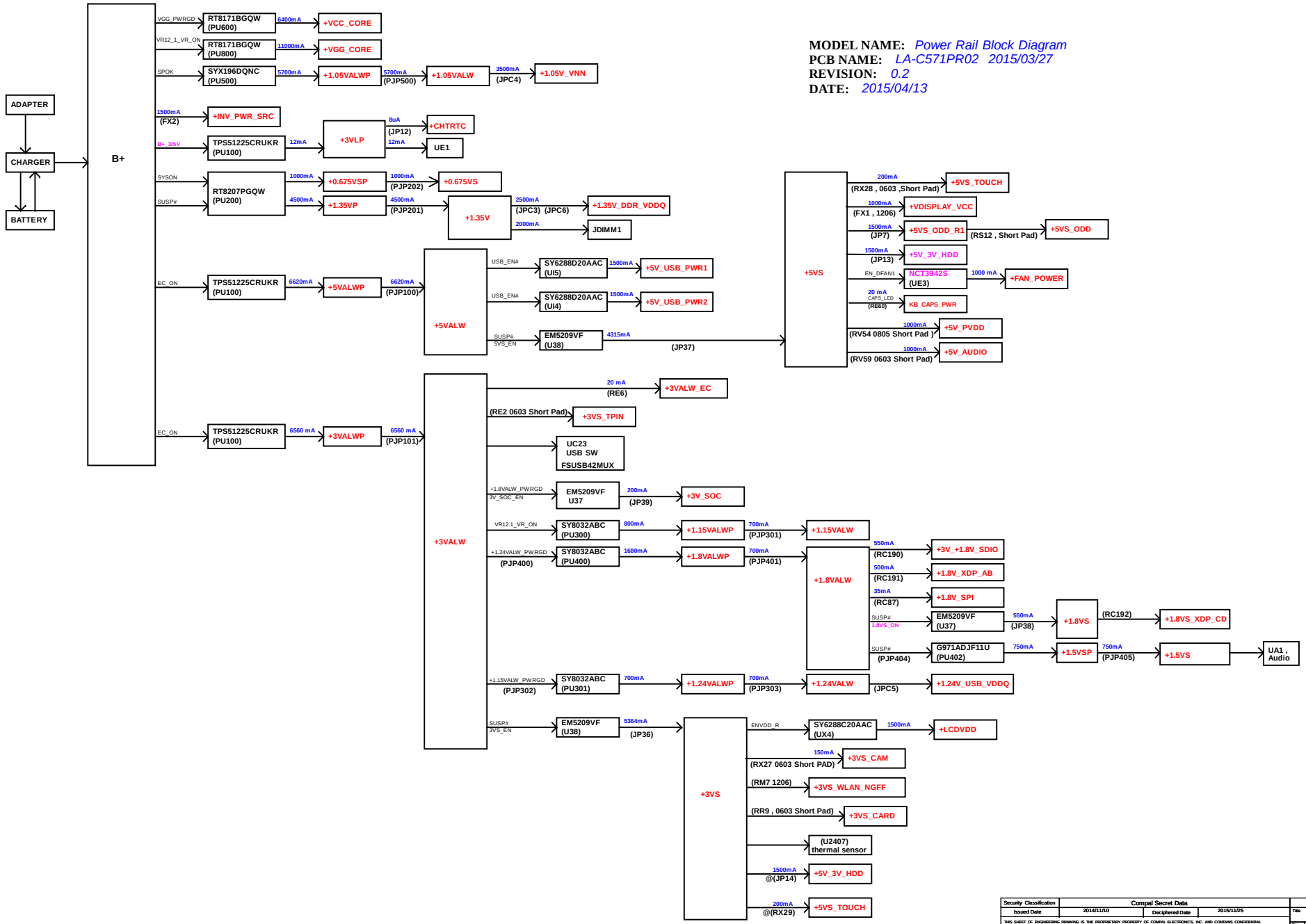

MODEL NAME: *Power Rail Block Diagram*
PCB NAME: *LA-C571PR02 2015/03/27*
REVISION: *0.2*
DATE: *2015/04/13*

Security Classification	Compal Secret Data		
Issued Date	2014/11/10	Deciphered Date	2015/11/25

THIS SHEET OF ENGINEERING DRAWING IS THE PROPRIETARY PROPERTY OF COMPAL ELECTRONICS, INC. AND CONTAINS CONFIDENTIAL AND TRADE SECRET INFORMATION. THIS SHEET MAY NOT BE TRANSFERRED FROM THE CUSTODY OF THE COMPETENT DIVISION OF R&D DEPARTMENT EXCEPT AS AUTHORIZED BY COMPAL ELECTRONICS, INC. NEITHER THIS SHEET NOR THE INFORMATION IT CONTAINS MAY BE USED BY OR DISCLOSED TO ANY THIRD PARTY WITHOUT PRIOR WRITTEN CONSENT OF COMPAL ELECTRONICS, INC.

Compal Electronics, Inc.			
Title: P03-DB block diagram			
Size	Document Number: LA-E372P		Rev: 0.2
Date: Wednesday, July 27, 2016	Sheet 3 of 47		

Vinafix.com

Voltage Rails TBD

Power Plane	Description	S0	S3	S4/S5
VIN	19V Adapter power supply	ON	ON	ON
BATT+	12V Battery power supply	ON	ON	ON
B+	AC or battery power rail for power circuit. (19V/12V)	ON	ON	ON
+RTCVCC	RTC Battery Power	ON	ON	ON
+1.05VALW	+1.05v Always power rail	ON	ON	ON
+1.24VALW	+1.24v Always power rail	ON	ON	ON
+1.8VALW	+1.8v Always power rail	ON	ON	ON
+3VALW	+3.3v Always power rail	ON	ON	ON
+3V_SOC	+3V_SOC Always power rail	ON	ON	ON
+5VALW	+5.0v Always power rail	ON	ON	ON
+1.35V	+1.35V power rail for DDR3L	ON	ON	OFF
+VCC_CORE	Core voltage for SOC	ON	OFF	OFF
+VGG_CORE	GFX voltage for SOC	ON	OFF	OFF
+0.675VS	+0.675V power rail for DDR3L Terminator	ON	OFF	OFF
+1.15VALW	+1.15VALW system power rail	ON	OFF	OFF
+1.35VS	+1.35v system power rail	ON	OFF	OFF
+1.5VS	+1.5v system power rail	ON	OFF	OFF
+1.8VS	+1.8v system power rail	ON	OFF	OFF
+3VS	+3.3v system power rail	ON	OFF	OFF
+5VS	+5.0v system power rail	ON	OFF	OFF

Note : ON* means that this power plane is ON only with AC power available, otherwise it is OFF.

Board ID / SKU ID Table for AD channel TBD

Board ID Table for AD channel

Vcc	3.3V +/- 1%
Ra	100K +/- 1%

Board ID	Rb	VAD_BID min	VAD_BID typ	VAD_BID max	EC AD3
0	0	0.000V	0.000V	0.300V	0x00 - 0x0B
1	12K +/- 1%	0.347V	0.354V	0.360V	0x0C - 0x1C
2	15K +/- 1%	0.423V	0.430V	0.438V	0x1D - 0x26
3	20K +/- 1%	0.541V	0.550V	0.559V	0x27 - 0x30
4	27K +/- 1%	0.691V	0.702V	0.713V	0x31 - 0x3B
5	33K +/- 1%	0.807V	0.819V	0.831V	0x3C - 0x46
6	43K +/- 1%	0.978V	0.992V	1.006V	0x47 - 0x54
7	56K +/- 1%	1.169V	1.185V	1.200V	0x55 - 0x64
8	75K +/- 1%	1.398V	1.414V	1.430V	0x65 - 0x76
9	100K +/- 1%	1.634V	1.650V	1.667V	0x77 - 0x87
10	130K +/- 1%	1.849V	1.865V	1.881V	0x88 - 0x96
11	160K +/- 1%	2.015V	2.031V	2.046V	0x97 - 0xA3
12	200K +/- 1%	2.185V	2.200V	2.215V	0xA4 - 0xAD
13	240K +/- 1%	2.316V	2.329V	2.343V	0xAE - 0xB7
14	270K +/- 1%	2.395V	2.408V	2.421V	0xB8 - 0xC0
15	330K +/- 1%	2.521V	2.533V	2.544V	0xC1 - 0xC9
16	430K +/- 1%	2.667V	2.677V	2.687V	0xCA - 0xD3
17	560K +/- 1%	2.791V	2.800V	2.808V	0xD4 - 0xDC
18	750K +/- 1%	2.905V	2.912V	2.919V	0xDD - 0xE6
19	NC	3.000V	3.300V	3.300V	0xE7 - 0xFF

BOARD ID Table TBD

Board ID	PCB Revision
0	0.1

TBD BOM Option Table

Item	BOM Structure
Unpop	@
Connector	CONN@
XDP (Debug Port)	XDP@
EMC requirement	EMI@
EMC requirement unpop	NEMI@
LPC18	LPC18@
LPC33	LPC33@
Rvs. RF requirement	RF@
ESD requirement	ESD@
XDP (Debug Port) unpop	NXDP@
ESD requirement unpop	NESD@
For JUMP	JP@
For PCB	PCB@
For CPU	SOC@ SOC1@
SATA re-Driver	601@
Test Point	TP@

43 level BOM table TBD

43 Level	Description	BOM Structure
4319Y031L01	MB AC571 AAL14 BSW U PEN HDMI	EMI@/ESD@/XDP@/LPC33@/PCB@/ODD@/SOC@/601@/N601@/PARADE@
4319Y031L02	MB AC571 AAL14 BSW U CEL HDMI	EMI@/ESD@/XDP@/LPC33@/PCB@/ODD@/SOC1@/601@/N601@/PARADE@

Security Classification	Compal Secret Data		
Issued Date	2014/02/26	Deciphered Date	2015/02/25

THIS SHEET OF ENGINEERING DRAWING IS THE PROPRIETARY PROPERTY OF COMPAL ELECTRONICS, INC. AND CONTAINS CONFIDENTIAL AND TRADE SECRET INFORMATION. THIS SHEET MAY NOT BE TRANSFERED FROM THE CUSTODY OF THE COMPETENT DIVISION OF R&D DEPARTMENT EXCEPT AS AUTHORIZED BY COMPAL ELECTRONICS, INC. NEITHER THIS SHEET NOR THE INFORMATION IT CONTAINS MAY BE USED BY OR DISCLOSED TO ANY THIRD PARTY WITHOUT PRIOR WRITTEN CONSENT OF COMPAL ELECTRONICS, INC.

Compal Electronics, Inc.

Title: P04-Notes List

Size	Document Number	Rev
B	LA-E372P	0.2

Date: Wednesday, July 27, 2016 Sheet 4 of 47

Vinafix.com

MODEL NAME: SMbus Block Diagram
PCB NAME: LA-E372 PR02 2016/06/20
REVISION: 0.2
DATE: 2016/06/20

SOC BSW

+1.8VALW +1.8VALW +3VALW

1K RC53 RC55 | N-MOS Q4 LBSS138W Q5 | 2.2K RC158 XDP@ RC159 XDP@ | RC154 XDP@ RC155 XDP@ 0 | JXDP1 CONN@ 53 51

AM6 SMB_SOC_CLK — SMB_SOC_CLK_R
AM7 SMB_SOC_DATA — SMB_SOC_DATA_R

+1.8VALW +1.8VALW +3VALW +3VALW +3VALW

1K RC59 @ RC60 @ | Dual N-MOS QC3 | 10K RC161 RC162 | Dual N-MOS QC4 | 10K RC181 RC180 | JEDP1 CONN@

AK6 I2C_0_SCL — I2C_0_SCL_R_L — I2C_0_SCL_R
AH7 I2C_0_SDA — I2C_0_SDA_R_L — I2C_0_SDA_R

Touch screen

+1.8VALW

2.2K RC57 RC58 | 0 PR545 PR546 | PU501 | PMIC

AF6 I2C_1_SCL — I2C_1_SCL_R
AH6 I2C_1_SDA — I2C_1_SDA_R

+1.8VALW

2.2K RC62 @ RC64 @ | 0 RC169 RC170 | UA1 | Codec

AC1 I2C_4_SCL — I2C_4_SCL_R
AD3 I2C_4_SDA — I2C_4_SDA_R

+1.8VALW +1.8VALW +3VALW +3VTP_VDD +3VTP_VDD

2.2K RC65 @ RC66 @ | Dual N-MOS QC5 | 4.7K RC172 RC173 | Dual N-MOS QC6 | 4.7K RC174 RC175 | JTP1 CONN@

AB2 I2C_5_SCL — I2C_5_SCL_R_L — I2C5_SCL_TP_R
AC3 I2C_5_SDA — I2C_5_SDA_R_L — I2C5_SDA_TP_R

Touch pad

KBC MEC1322

+3VALW_EC

3.3K RE35 RE36 | 100 PR120 PR118 | PBATT1 CONN@ | Battery

A56 SMB_BC_CLK
B59 SMB_BC_DATA

0 PR333 PR334 | PU301 | Charger IC

+3VALW_EC

10K RE71 RE68

A55 I2C_0_CLK_EC
B58 I2C_0_SDA_EC

+3VALW_EC

10K RE69 RE70

B47 I2C_1_CLK_EC
A44 I2C_1_SDA_EC

+3VALW_ACCE

10K RS11 RS12 | JSEN1 CONN@ | ACC Sensor(SB)

B48 EC_SENSOR_I2C2_SCL
A45 EC_SENSOR_I2C2_SDA

U24 | ACC Sensor(MB)

+3VALW_EC

10K RE32 RE33 | U32 | Thermal Sensor

A63 SMB_THRM_CLK
B66 SMB_THRM_DATA

Vinafix.com

Security Classification	Compal Secret Data		
Issued Date	2014/11/10	Deciphered Date	2015/11/25

THIS SHEET OF ENGINEERING DRAWING IS THE PROPRIETARY PROPERTY OF COMPAL ELECTRONICS, INC. AND CONTAINS CONFIDENTIAL AND TRADE SECRET INFORMATION. THIS SHEET MAY NOT BE TRANSFERED FROM THE CUSTODY OF THE COMPETENT DIVISION OF R&D DEPARTMENT EXCEPT AS AUTHORIZED BY COMPAL ELECTRONICS, INC. NEITHER THIS SHEET NOR THE INFORMATION IT CONTAINS MAY BE USED BY OR DISCLOSED TO ANY THIRD PARTY WITHOUT PRIOR WRITTEN CONSENT OF COMPAL ELECTRONICS, INC.

Compal Electronics, Inc.

Title: P05-SMBus block diagram

Size: | Document Number: LA-E372P | Rev: 0.2

Date: Sunday, July 17, 2016 | Sheet 5 of 47

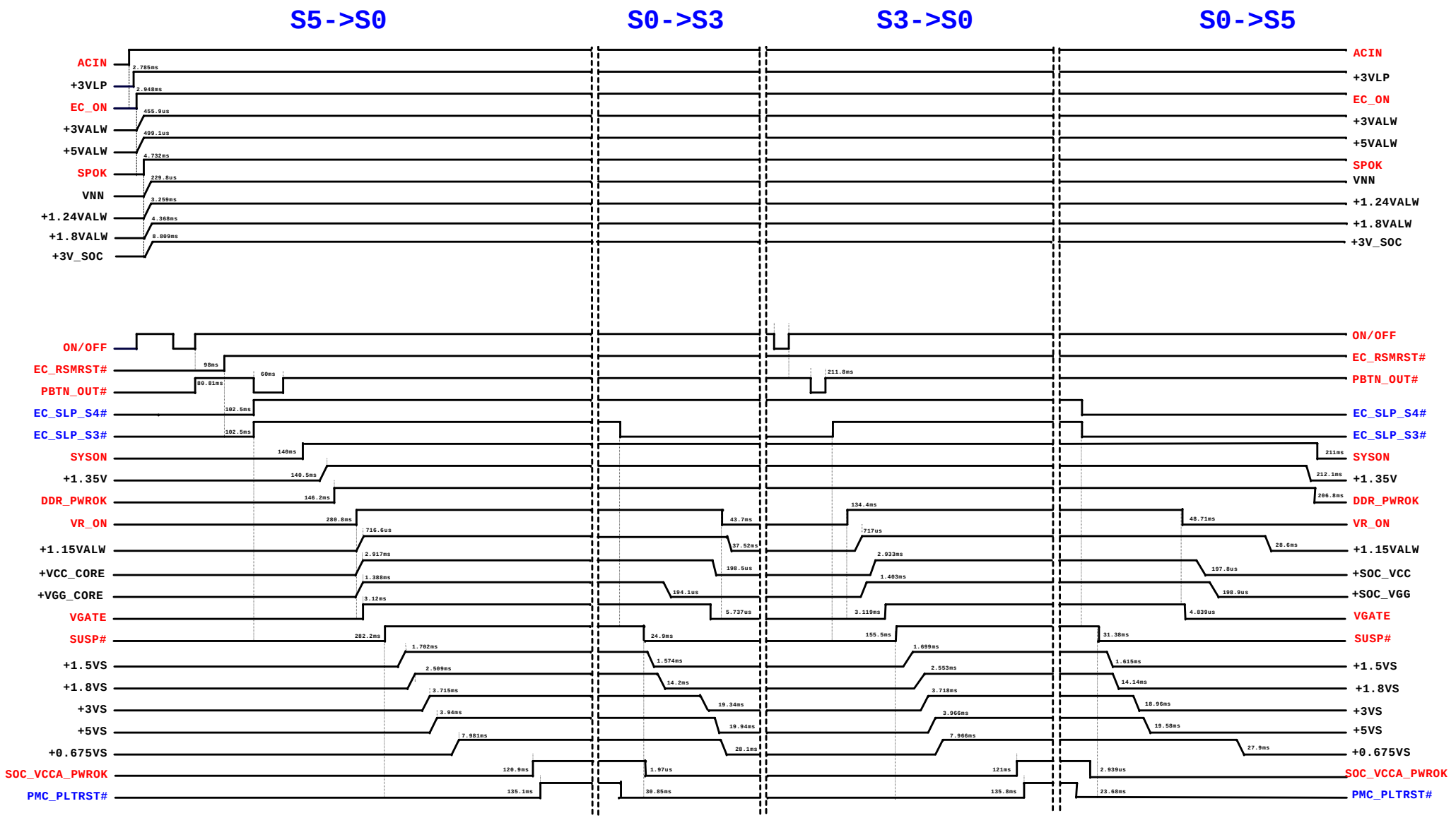

Vinafix.com

Security Classification	Compal Secret Data		
Issued Date	2014/11/10	Deciphered Date	2015/11/25

THIS SHEET OF ENGINEERING DRAWING IS THE PROPRIETARY PROPERTY OF COMPAL ELECTRONICS, INC. AND CONTAINS CONFIDENTIAL AND TRADE SECRET INFORMATION. THIS SHEET MAY NOT BE TRANSFERED FROM THE CUSTODY OF THE COMPETENT DIVISION OF R&D DEPARTMENT EXCEPT AS AUTHORIZED BY COMPAL ELECTRONICS, INC. NEITHER THIS SHEET NOR THE INFORMATION IT CONTAINS MAY BE USED BY OR DISCLOSED TO ANY THIRD PARTY WITHOUT PRIOR WRITTEN CONSENT OF COMPAL ELECTRONICS, INC.

Compal Electronics, Inc.

Title: P06-Power Sequence

Size: C | Document Number: LA-E372P | Rev: 0.2

Date: Sunday, July 17, 2016 | Sheet 6 of 47

MODEL NAME: *Power Sequence Block Diagram*
PCB NAME: *?*
REVISION: *?*
DATE: *?*

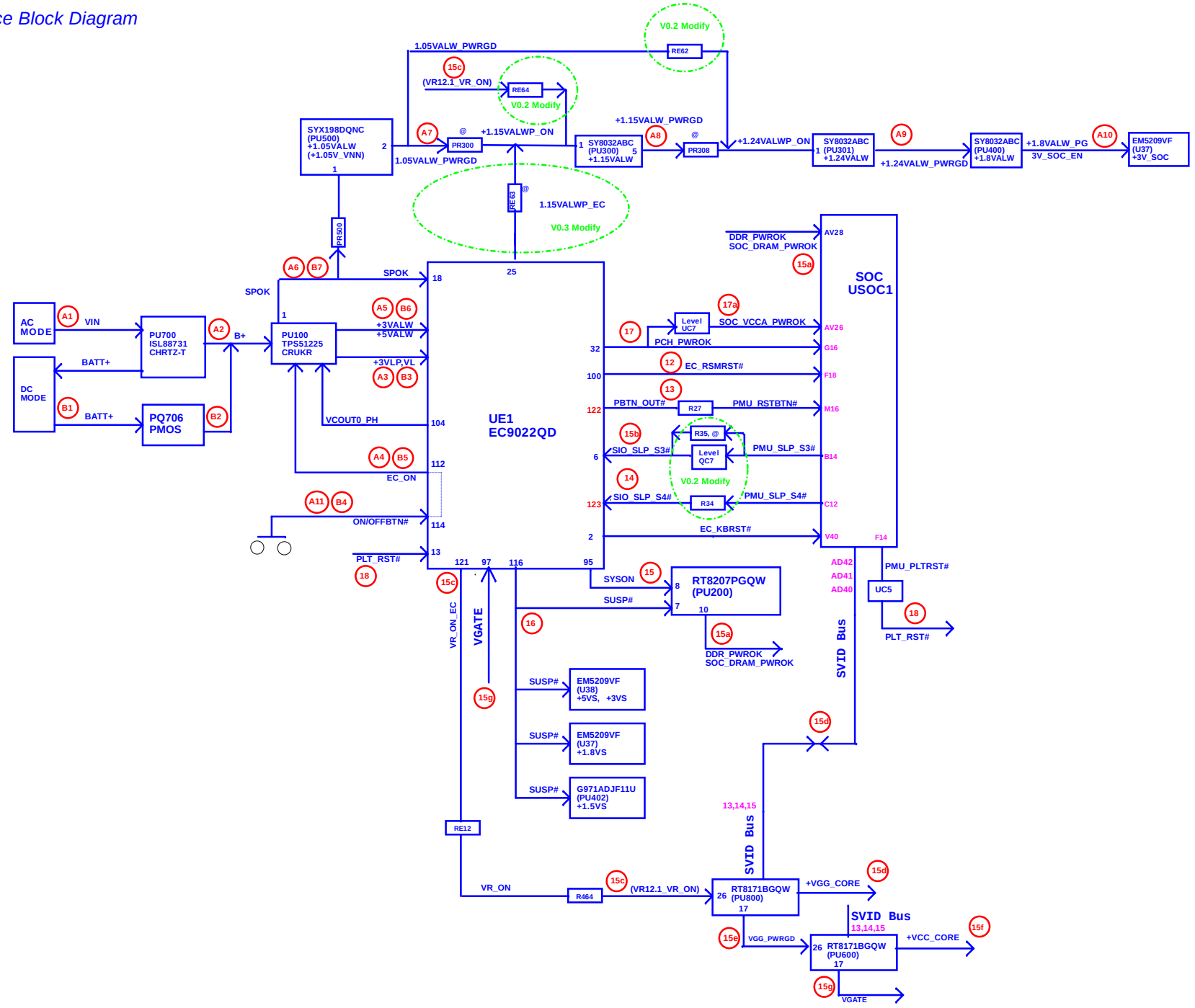

Security Classification	Compal Secret Data		
Issued Date	2014/11/10	Deciphered Date	2015/11/25

THIS SHEET OF ENGINEERING DRAWING IS THE PROPRIETARY PROPERTY OF COMPAL ELECTRONICS, INC. AND CONTAINS CONFIDENTIAL AND TRADE SECRET INFORMATION. THIS SHEET MAY NOT BE TRANSFERED FROM THE CUSTODY OF THE COMPETENT DIVISION OF R&D DEPARTMENT EXCEPT AS AUTHORIZED BY COMPAL ELECTRONICS, INC. NEITHER THIS SHEET NOR THE INFORMATION IT CONTAINS MAY BE USED BY OR DISCLOSED TO ANY THIRD PARTY WITHOUT PRIOR WRITTEN CONSENT OF COMPAL ELECTRONICS, INC.

Compal Electronics, Inc.

Title: P07-Power Sequence Block Diagram

Size: Custom | Document Number: LA-E372P | Rev: 0.2

Date: Sunday, July 17, 2016 | Sheet 7 of 47

Vinafix.com

Main Func = CPU

Modify : LPDDR3 RAM

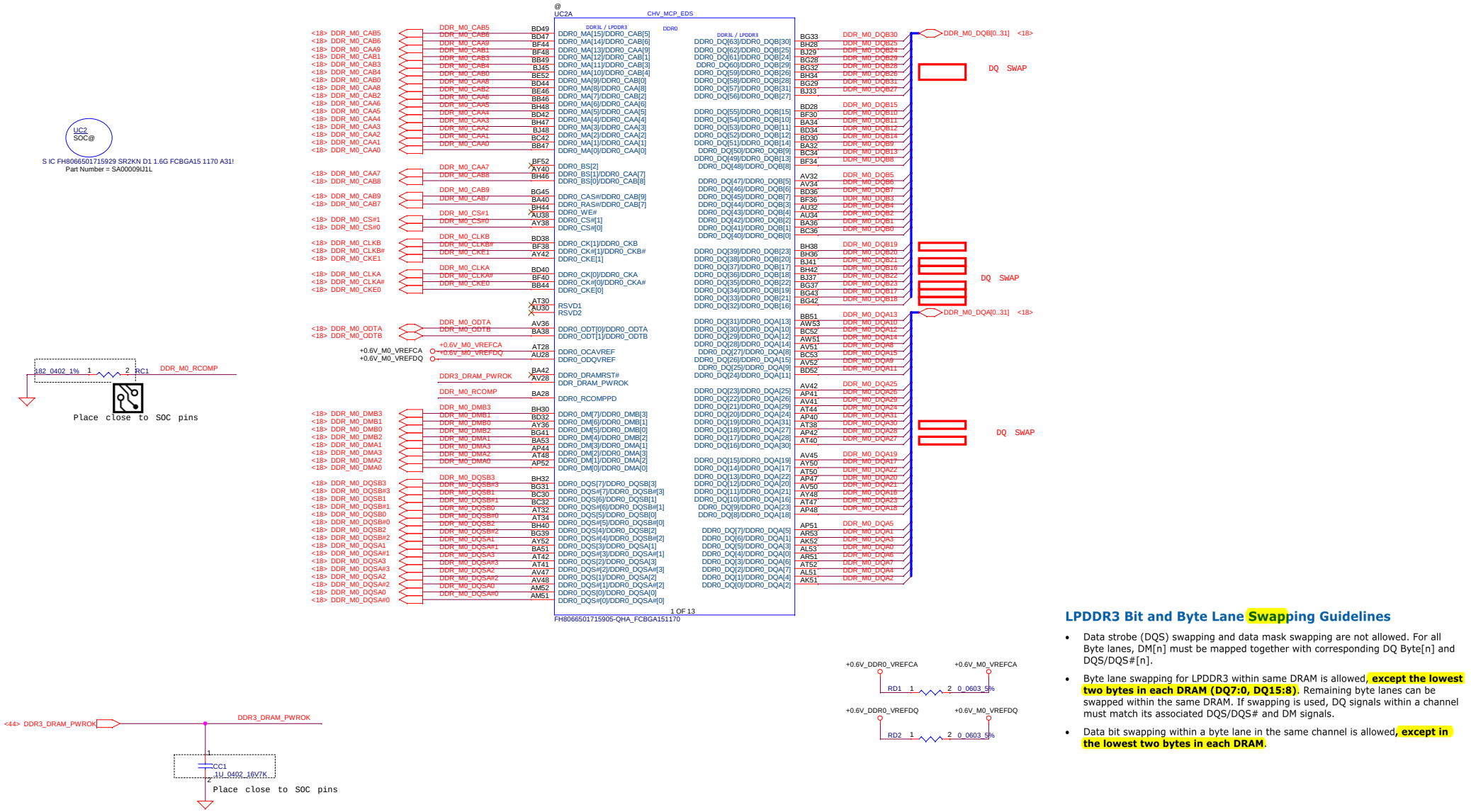

LPDDR3 Bit and Byte Lane Swapping Guidelines

- Data strobe (DQS) swapping and data mask swapping are not allowed. For all Byte lanes, DM[n] must be mapped together with corresponding DQ Byte[n] and DQS/DQS#[n].
- Byte lane swapping for LPDDR3 within same DRAM is allowed, **except the lowest two bytes in each DRAM (DQ7:0, DQ15:8)**. Remaining byte lanes can be swapped within the same DRAM. If swapping is used, DQ signals within a channel must match its associated DQS/DQS# and DM signals.
- Data bit swapping within a byte lane in the same channel is allowed, **except in the lowest two bytes in each DRAM**.

Vinafix.com

Security Classification	Compal Secret Data		
Issued Date	2014/11/10	Deciphered Date	2015/11/25

THIS SHEET OF ENGINEERING DRAWING IS THE PROPRIETARY PROPERTY OF COMPAL ELECTRONICS, INC. AND CONTAINS CONFIDENTIAL AND TRADE SECRET INFORMATION. THIS SHEET MAY NOT BE TRANSFERED FROM THE CUSTODY OF THE COMPETENT DIVISION OF R&D DEPARTMENT EXCEPT AS AUTHORIZED BY COMPAL ELECTRONICS, INC. NEITHER THIS SHEET NOR THE INFORMATION IT CONTAINS MAY BE USED BY OR DISCLOSED TO ANY THIRD PARTY WITHOUT PRIOR WRITTEN CONSENT OF COMPAL ELECTRONICS, INC.

Compal Electronics, Inc.	
Title	P08-BSW(1/8) DDR3L-CH0
Size	Document Number: LA-E372P — Rev: 0.2
Date: Sunday, July 17, 2016	Sheet 8 of 47

Main Func = CPU

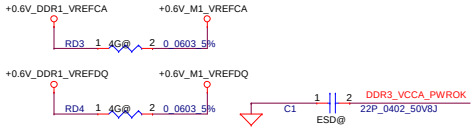

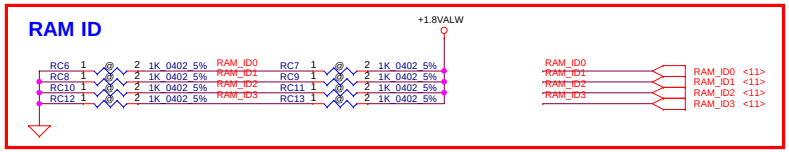

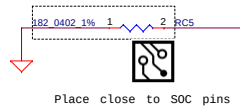

	RAM ID0	RAM ID1	RAM ID2	RAM ID2
HYNIX_4G	RC6 H4G@ SD028100180 1K_0402_5%	RC8 H4G@ SD028100180 1K_0402_5%	RC10 H4G@ SD028100180 1K_0402_5%	RC12 H4G@ SD028100180 1K_0402_5%
HYNIX_2G	RC7 H2G@ SD028100180 1K_0402_5%	RC8 H2G@ SD028100180 1K_0402_5%	RC10 H2G@ SD028100180 1K_0402_5%	RC12 H2G@ SD028100180 1K_0402_5%
SAMSUNG_4G	RC6 S4G@ SD028100180 1K_0402_5%	RC8 S4G@ SD028100180 1K_0402_5%	RC11 S4G@ SD028100180 1K_0402_5%	RC12 S4G@ SD028100180 1K_0402_5%
SAMSUNG_2G	RC7 S2G@ SD028100180 1K_0402_5%	RC8 S2G@ SD028100180 1K_0402_5%	RC11 S2G@ SD028100180 1K_0402_5%	RC12 S2G@ SD028100180 1K_0402_5%
Micron_4G	RC6 M4G@ SD028100180 1K_0402_5%	RC9 M4G@ SD028100180 1K_0402_5%	RC10 M4G@ SD028100180 1K_0402_5%	RC12 M4G@ SD028100180 1K_0402_5%
Micron_2G	RC7 M2G@ SD028100180 1K_0402_5%	RC9 M2G@ SD028100180 1K_0402_5%	RC10 M2G@ SD028100180 1K_0402_5%	RC12 M2G@ SD028100180 1K_0402_5%

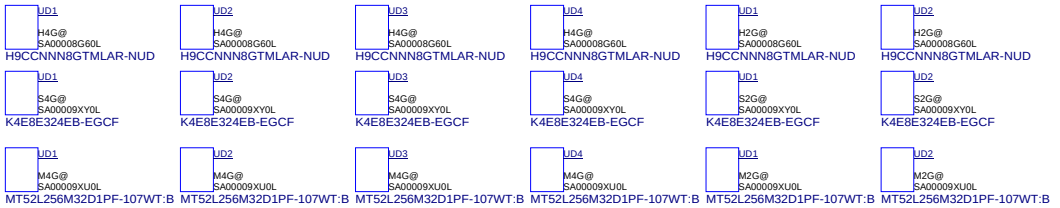

Vendor	RAM capacity	RAM_ID0	RAM_ID1	RAM_ID2	RAM_ID3
Hynix H9CCNNN8GTMLAR-NUD	4GB(4 pcs)	0	0	0	0
	2GB(2 pcs)	1	0	0	0
Micron MT52L256M32D1PF-107 WT:B	4GB(4 pcs)	0	1	0	0
	2GB(2 pcs)	1	1	0	0
Samsung K4E8E324EB-EGCF	4GB(4 pcs)	0	0	1	0
	2GB(2 pcs)	1	0	1	0

Vinafix.com

Security Classification	Compal Secret Data		
Issued Date	2014/11/10	Deciphered Date	2015/11/25

THIS SHEET OF ENGINEERING DRAWING IS THE PROPRIETARY PROPERTY OF COMPAL ELECTRONICS, INC. AND CONTAINS CONFIDENTIAL AND TRADE SECRET INFORMATION. THIS SHEET MAY NOT BE TRANSFERED FROM THE CUSTODY OF THE COMPETENT DIVISION OF R&D DEPARTMENT EXCEPT AS AUTHORIZED BY COMPAL ELECTRONICS, INC. NEITHER THIS SHEET NOR THE INFORMATION IT CONTAINS MAY BE USED BY OR DISCLOSED TO ANY THIRD PARTY WITHOUT PRIOR WRITTEN CONSENT OF COMPAL ELECTRONICS, INC.

Compal Electronics, Inc.

Title: P09-BSW(2/8) DDR3L-CH1

Size | Document Number: LA-E372P | Rev: 0.2

Date: Sunday, July 17, 2016 | Sheet 9 of 47

Main Func = CPU

Modify : DDI/XDP/SDMMC net name link XDP/SDMMC

Display mapping	
DDI0	NC
DDI1	eDP
DDI2	HDMI

SD mapping	
SDMMC1	eMMC
SDMMC2	NC
SDMMC3	SD Card

0922:Hubert
MCSI_COMP width 20 mil to other trace 15 mil

04/15:Sam
Check XDP pin definition

strap pin : GP_CAMSB08
GP_CAMSB09
GP_CAMSB11

<eDP>

2.2K HDMI pull up RE

<HDMI>

<eMMC>

EDP

eDP CONTROL PIN

Table 24-2. Digital Display Interface Supported

Port	Supported
DDI0	HDMI, DP, or eDP*
DDI1	HDMI, DP, or eDP*
DDI2	HDMI or DP

* Up to two HDMI displays can be supported simultaneously. It is recommended to have the HDMI on DDI0 & DDI2 ports.

Vinafix.com

Security Classification	Compal Secret Data		
Issued Date	2014/11/10	Deciphered Date	2015/11/25

THIS SHEET OF ENGINEERING DRAWING IS THE PROPRIETARY PROPERTY OF COMPAL ELECTRONICS, INC. AND CONTAINS CONFIDENTIAL AND TRADE SECRET INFORMATION. THIS SHEET MAY NOT BE TRANSFERED FROM THE CUSTODY OF THE COMPETENT DIVISION OF R&D DEPARTMENT EXCEPT AS AUTHORIZED BY COMPAL ELECTRONICS, INC. NEITHER THIS SHEET NOR THE INFORMATION IT CONTAINS MAY BE USED BY OR DISCLOSED TO ANY THIRD PARTY WITHOUT PRIOR WRITTEN CONSENT OF COMPAL ELECTRONICS, INC.

Compal Electronics, Inc.

Title: **P10-BSW(3/8) DDI,MCSI,SDMMC**

Size | Document Number: **LA-E372P** | Rev: 0.2

Date: Sunday, July 17, 2016 | Sheet 10 of 47

Main Func = CPU

BIOS ROM

This way can't control +1.8V_SPI
It will leakage voltage from S/D diode

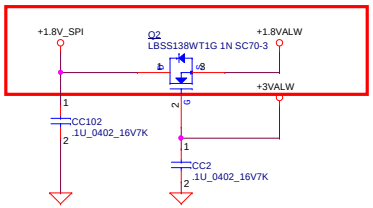

BIOS ROM change 04/22 Sam

SPI ROM (8MByte/1.8V/Duad-IO)

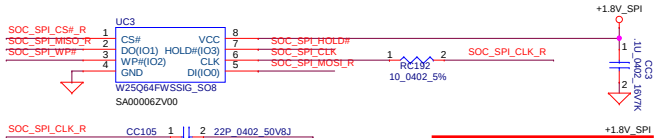

pull up
CRB 3.3K
PDG 100K
SPI_CS0#

No use SATA, So follow check list to PD

Close UC3 and JC1

Change P/N to SJ10000N700 19.2MHz_12pF

Strap pin/BIOS/EFI Top Swap

SMB_SOC_CLKULL high 1K base on check list
SMB_SOC_DATA PULL high 1K base on check list
But Intel CRB not

Need to reserve? Follow PDG

Display mapping			
I2C_0	TS	I2C_4	Audio
I2C_1	PMIC	I2C_5	TP
I2C_2	NC	I2C_6	NC

Security Classification	Compal Secret Data	
Issued Date	2014/11/10	Deciphered Date 2015/11/25

THIS SHEET OF ENGINEERING DRAWING IS THE PROPRIETARY PROPERTY OF COMPAL ELECTRONICS, INC. AND CONTAINS CONFIDENTIAL AND TRADE SECRET INFORMATION. THIS SHEET MAY NOT BE TRANSFERED FROM THE CUSTODY OF THE COMPETENT DIVISION OF R&D DEPARTMENT EXCEPT AS AUTHORIZED BY COMPAL ELECTRONICS, INC. NEITHER THIS SHEET NOR THE INFORMATION IT CONTAINS MAY BE USED BY OR DISCLOSED TO ANY THIRD PARTY WITHOUT PRIOR WRITTEN CONSENT OF COMPAL ELECTRONICS, INC.

Compal Electronics, Inc.

Title: P11-BSW(4/8) PCIE,SATA,I2C,CLK

Size: | Document Number: LA-E372P | Rev: 0.2

Date: Sunday, July 17, 2016 | Sheet 11 of 47

Vinafix.com

Main Func = CPU

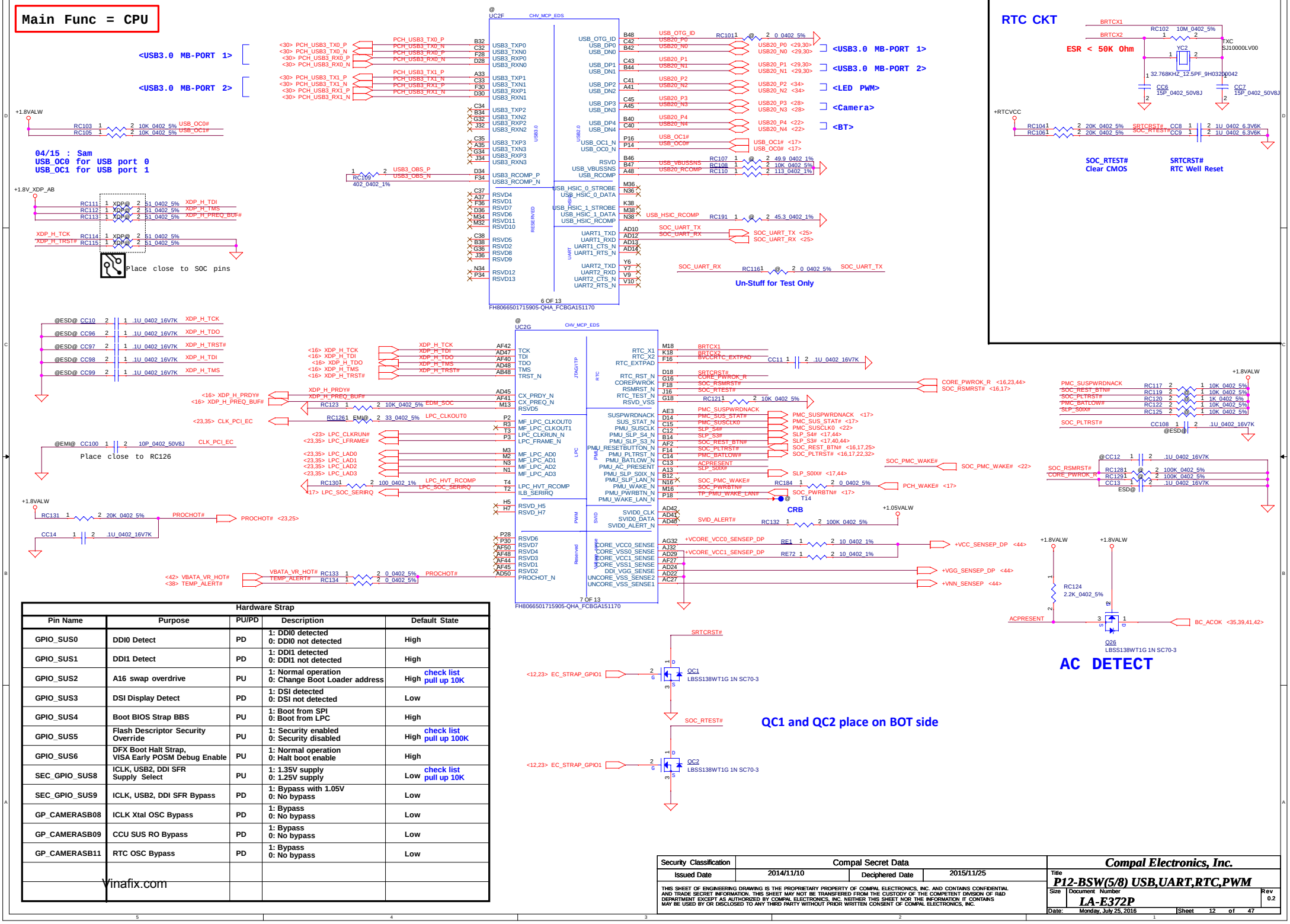

Hardware Strap				
Pin Name	Purpose	PU/PD	Description	Default State
GPIO_SUS0	DDI0 Detect	PD	1: DDI0 detected 0: DDI0 not detected	High
GPIO_SUS1	DDI1 Detect	PD	1: DDI1 detected 0: DDI1 not detected	High
GPIO_SUS2	A16 swap overdrive	PU	1: Normal operation 0: Change Boot Loader address	High check list pull up 10K
GPIO_SUS3	DSI Display Detect	PD	1: DSI detected 0: DSI not detected	Low
GPIO_SUS4	Boot BIOS Strap BBS	PU	1: Boot from SPI 0: Boot from LPC	High
GPIO_SUS5	Flash Descriptor Security Override	PU	1: Security enabled 0: Security disabled	High check list pull up 100K
GPIO_SUS6	DFX Boot Halt Strap, VISA Early POSM Debug Enable	PU	1: Normal operation 0: Halt boot enable	High
SEC_GPIO_SUS8	ICLK, USB2, DDI SFR Supply Select	PU	1: 1.35V supply 0: 1.25V supply	Low check list pull up 10K
SEC_GPIO_SUS9	ICLK, USB2, DDI SFR Bypass	PD	1: Bypass with 1.05V 0: No bypass	Low
GP_CAMERASB08	ICLK Xtal OSC Bypass	PD	1: Bypass 0: No bypass	Low
GP_CAMERASB09	CCU SUS RO Bypass	PD	1: Bypass 0: No bypass	Low
GP_CAMERASB11	RTC OSC Bypass	PD	1: Bypass 0: No bypass	Low

Vinafix.com

Security Classification	Compal Secret Data		
Issued Date	2014/11/10	Deciphered Date	2015/11/25

THIS SHEET OF ENGINEERING DRAWING IS THE PROPRIETARY PROPERTY OF COMPAL ELECTRONICS, INC. AND CONTAINS CONFIDENTIAL AND TRADE SECRET INFORMATION. THIS SHEET MAY NOT BE TRANSFERED FROM THE CUSTODY OF THE COMPETENT DIVISION OF R&D DEPARTMENT EXCEPT AS AUTHORIZED BY COMPAL ELECTRONICS, INC. NEITHER THIS SHEET NOR THE INFORMATION IT CONTAINS MAY BE USED BY OR DISCLOSED TO ANY THIRD PARTY WITHOUT PRIOR WRITTEN CONSENT OF COMPAL ELECTRONICS, INC.

Compal Electronics, Inc.

Title: P12-BSW(5/8) USB,UART,RTC,PWM

Size | Document Number: LA-E372P | Rev: 0.2

Date: Monday, July 25, 2016 | Sheet 12 of 47

Main Func = CPU

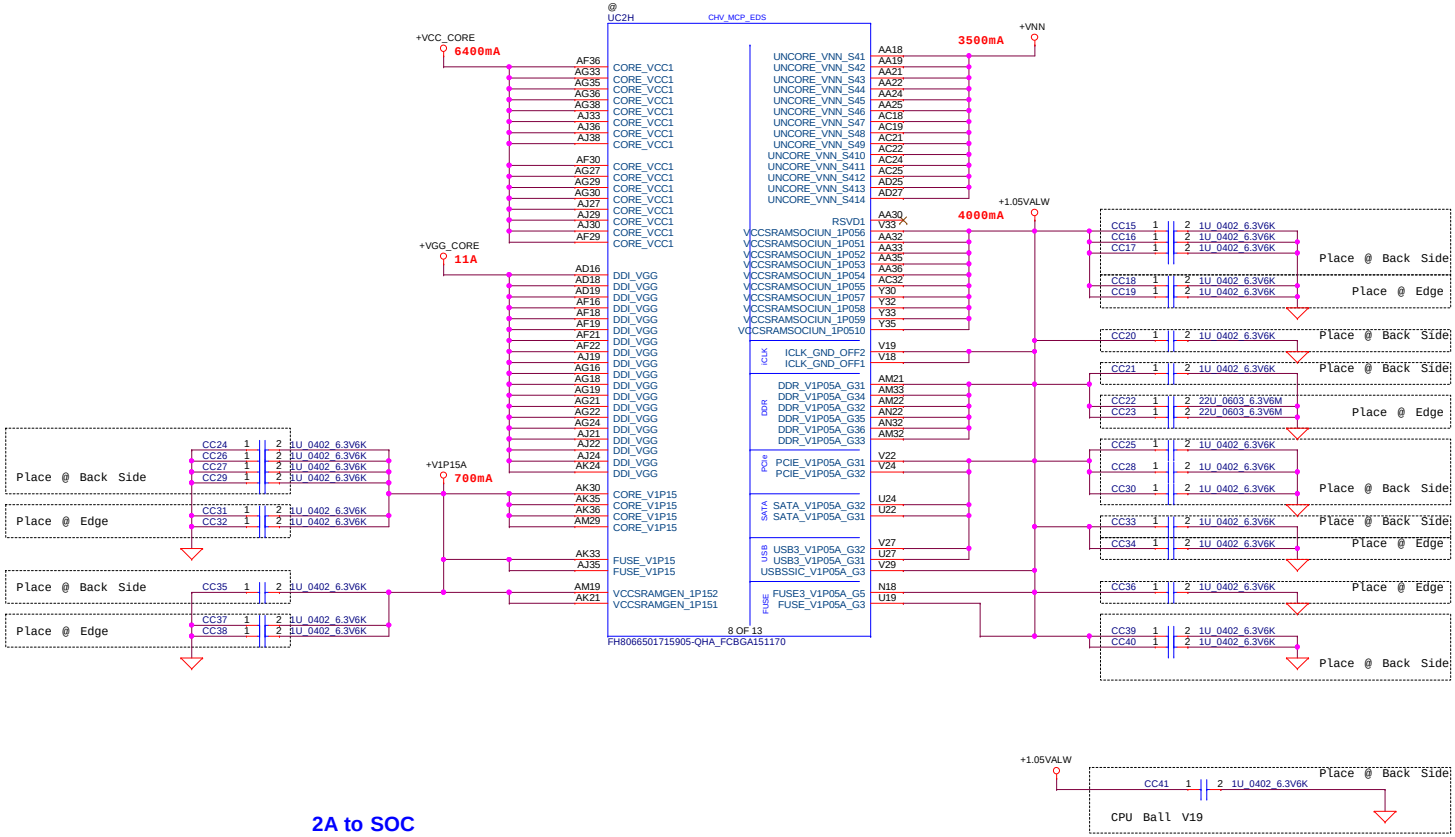

2A to SOC
Not include +VNN

Vinafix.com

Security Classification	Compal Secret Data		
Issued Date	2014/11/10	Deciphered Date	2015/11/25

THIS SHEET OF ENGINEERING DRAWING IS THE PROPRIETARY PROPERTY OF COMPAL ELECTRONICS, INC. AND CONTAINS CONFIDENTIAL AND TRADE SECRET INFORMATION. THIS SHEET MAY NOT BE TRANSFERED FROM THE CUSTODY OF THE COMPETENT DIVISION OF R&D DEPARTMENT EXCEPT AS AUTHORIZED BY COMPAL ELECTRONICS, INC. NEITHER THIS SHEET NOR THE INFORMATION IT CONTAINS MAY BE USED BY OR DISCLOSED TO ANY THIRD PARTY WITHOUT PRIOR WRITTEN CONSENT OF COMPAL ELECTRONICS, INC.

Compal Electronics, Inc.

Title: **P13-BSW(6/8) PWR1**

Size | Document Number: **LA-E372P** | Rev: 0.2

Date: Thursday, July 28, 2016 | Sheet 13 of 47

Main Func = CPU

Have to check 04/14

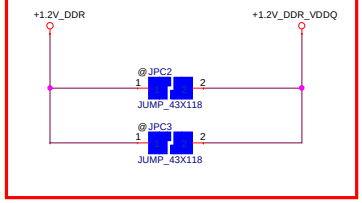

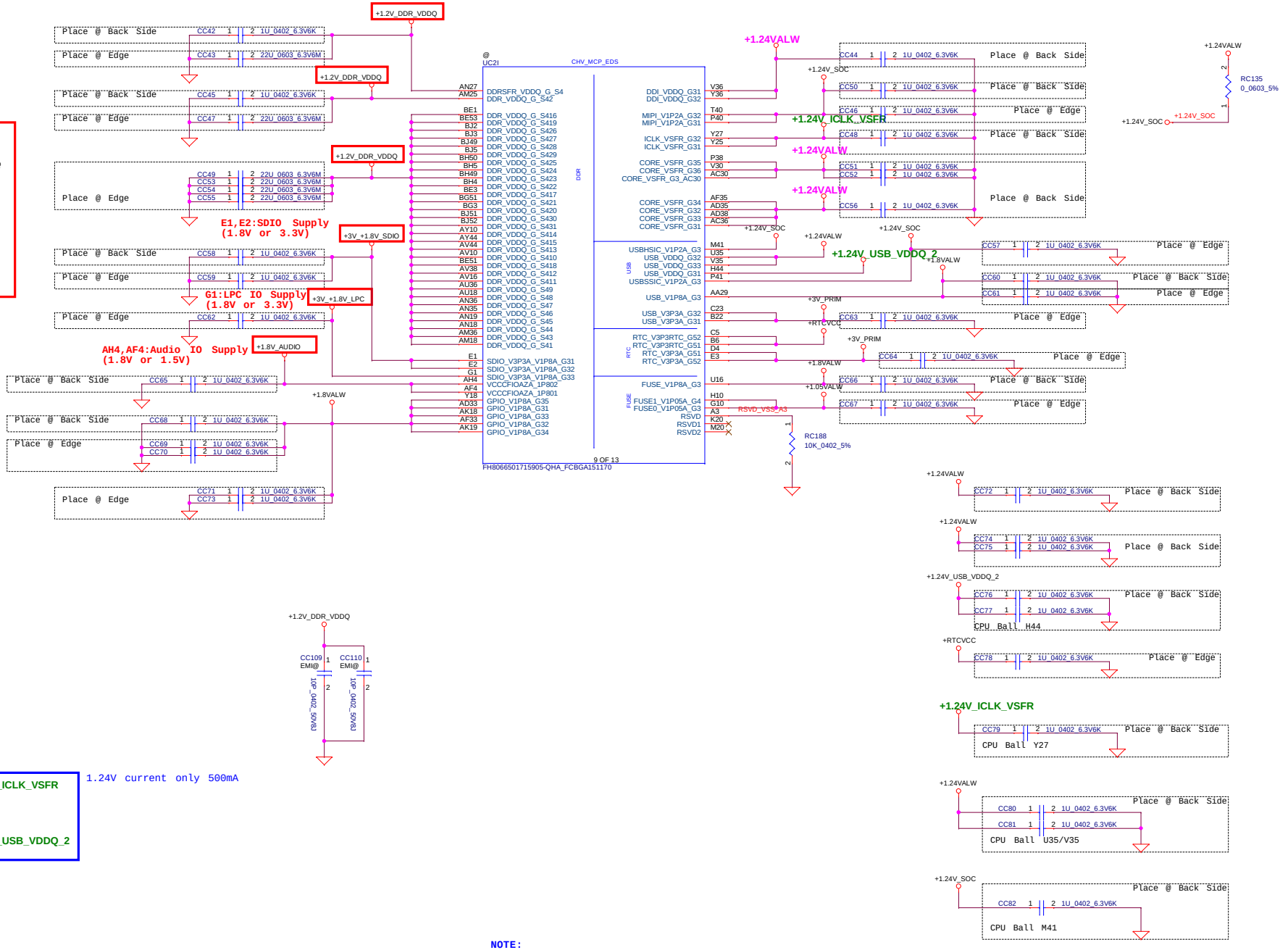

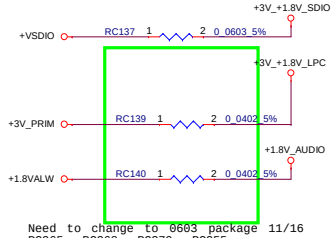

Need to change to 0603 package 11/16
RC265, RC268, RC270, RC255

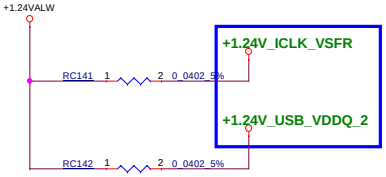

1.24V current only 500mA

NOTE:
+1.24V_MIPI, +1.24V_USBHSIC, +1.24V_USBSSIC are +1.24V Only.
[PDG Rev0p92 P.55]
When SSIC, HSIC & CSI interface is not used, the following pins can be connected to ground:
CSI (T40, P40), USB HSIC (M41), USB SSIC (P41).

Vinafix.com

Security Classification	Compal Secret Data		
Issued Date	2014/11/10	Deciphered Date	2015/11/25

THIS SHEET OF ENGINEERING DRAWING IS THE PROPRIETARY PROPERTY OF COMPAL ELECTRONICS, INC. AND CONTAINS CONFIDENTIAL AND TRADE SECRET INFORMATION. THIS SHEET MAY NOT BE TRANSFERED FROM THE CUSTODY OF THE COMPETENT DIVISION OF R&D DEPARTMENT EXCEPT AS AUTHORIZED BY COMPAL ELECTRONICS, INC. NEITHER THIS SHEET NOR THE INFORMATION IT CONTAINS MAY BE USED BY OR DISCLOSED TO ANY THIRD PARTY WITHOUT PRIOR WRITTEN CONSENT OF COMPAL ELECTRONICS, INC.

Compal Electronics, Inc.

Title: **P14-BSW(7/8) PWR2**

Size | Document Number: **LA-E372P** | Rev: 0.2

Date: Sunday, July 17, 2016 | Sheet 14 of 47

Main Func = CPU

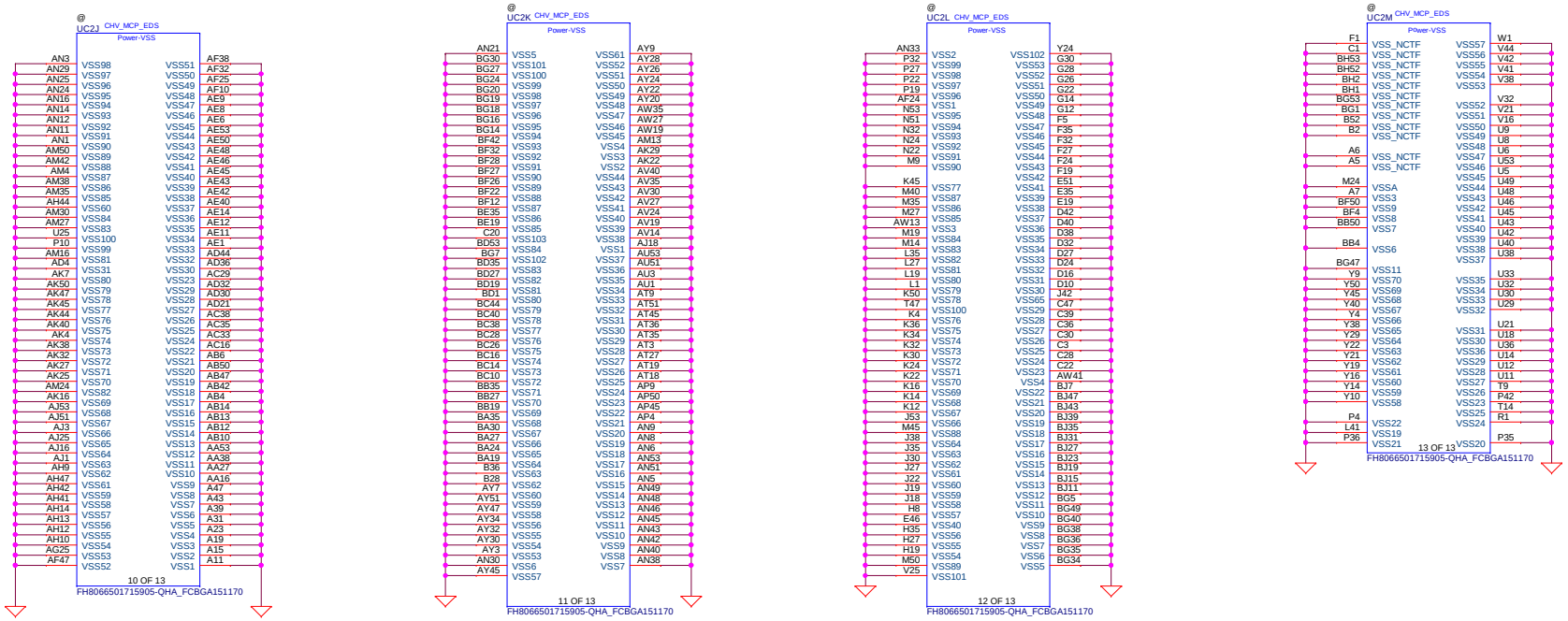
@ UC2J CHV_MCP_EDS
Power-VSS
AN3 AN29 AN25 AN24 AN16 AN14 AN12 AN11 AN1 AM50 AM42 AM4 AM38 AM35 AH44 AM30 AM27 U25 P10 AM16 AD4 AK7 AK50 AK47 AK45 AK44 AK40 AK4 AK38 AK32 AK27 AK25 AM24 AK16 AJ53 AJ51 AJ3 AJ25 AJ16 AJ1 AH9 AH47 AH42 AH41 AH14 AH13 AH12 AH10 AG25 AF47
VSS98 VSS97 VSS96 VSS95 VSS94 VSS93 VSS92 VSS91 VSS90 VSS89 VSS88 VSS87 VSS86 VSS85 VSS84 VSS83 VSS100 VSS99 VSS81 VSS31 VSS80 VSS79 VSS78 VSS77 VSS76 VSS75 VSS74 VSS73 VSS72 VSS71 VSS70 VSS82 VSS69 VSS68 VSS67 VSS66 VSS65 VSS64 VSS63 VSS62 VSS61 VSS59 VSS58 VSS57 VSS56 VSS55 VSS54 VSS53 VSS52
VSS51 VSS50 VSS49 VSS48 VSS47 VSS46 VSS45 VSS44 VSS43 VSS42 VSS41 VSS40 VSS39 VSS38 VSS37 VSS36 VSS35 VSS34 VSS33 VSS32 VSS31 VSS30 VSS23 VSS29 VSS28 VSS27 VSS26 VSS25 VSS24 VSS22 VSS21 VSS20 VSS19 VSS18 VSS17 VSS16 VSS15 VSS14 VSS13 VSS12 VSS11 VSS10 VSS9 VSS8 VSS7 VSS6 VSS5 VSS4 VSS3 VSS2 VSS1
AF38 AF32 AF25 AF10 AE9 AE8 AE6 AE53 AE50 AE48 AE46 AE45 AE43 AE42 AE40 AE14 AE12 AE11 AE1 AD44 AD36 AC29 AD22 AD30 AD21 AC38 AC35 AC33 AC16 AB6 AB50 AB47 AB42 AB4 AB14 AB13 AB12 AB10 AA53 AA38 AA27 AA16 A47 A43 A39 A31 A23 A19 A15 A11
10 OF 13
FH8066501715905-QHA_FCBGA151170
@ UC2K CHV_MCP_EDS
Power-VSS
AN21 BG30 BG27 BG24 BG20 BG19 BG18 BG16 BG14 BF43 BF32 BF28 BF27 BF26 BF22 BF12 BE35 BE19 C20 BD53 BG7 BD35 BD27 BD19 BD1 BC44 BC40 BC38 BC28 BC26 BC16 BC14 BC10 BB35 BB27 BB19 BA35 BA30 BA27 BA24 BA19 B36 B28 AY7 AY51 AY47 AY34 AY32 AY30 AY3 AN30 AY45
VSS5 VSS101 VSS100 VSS99 VSS98 VSS97 VSS96 VSS95 VSS94 VSS93 VSS92 VSS91 VSS90 VSS89 VSS88 VSS87 VSS86 VSS85 VSS103 VSS84 VSS102 VSS83 VSS82 VSS81 VSS80 VSS79 VSS78 VSS77 VSS76 VSS75 VSS74 VSS73 VSS72 VSS71 VSS70 VSS69 VSS68 VSS67 VSS66 VSS65 VSS64 VSS63 VSS62 VSS60 VSS59 VSS58 VSS56 VSS55 VSS54 VSS53 VSS6 VSS57
VSS61 VSS52 VSS51 VSS50 VSS49 VSS48 VSS47 VSS46 VSS45 VSS4 VSS3 VSS2 VSS44 VSS43 VSS42 VSS41 VSS40 VSS39 VSS38 VSS1 VSS37 VSS36 VSS35 VSS34 VSS33 VSS32 VSS31 VSS30 VSS29 VSS28 VSS27 VSS26 VSS25 VSS24 VSS23 VSS22 VSS21 VSS20 VSS19 VSS18 VSS17 VSS16 VSS15 VSS14 VSS13 VSS12 VSS11 VSS10 VSS9 VSS8 VSS7
AY9 AY28 AY26 AY24 AY22 AY20 AW35 AW27 AW19 AM13 AK29 AK22 AV40 AV35 AV30 AV27 AV24 AV19 AV14 AJ18 AU53 AU51 AU3 AU1 AT9 AT51 AT45 AT36 AT35 AT3 AT27 AT19 AT18 AP9 AP50 AP45 AP4 AN9 AN8 AN6 AN53 AN51 AN5 AN49 AN48 AN46 AN45 AN43 AN42 AN40 AN38
11 OF 13
FH8066501715905-QHA_FCBGA151170
@ UC2L CHV_MCP_EDS
Power-VSS
AN33 P32 P27 P22 P19 AP24 N53 N51 N32 N24 N22 M9 K45 M40 M35 M27 AW13 M19 M14 L35 L27 L19 L1 K50 T47 K4 K36 K34 K32 K30 K24 K22 K16 K14 K12 J53 M45 J38 J35 J30 J27 J22 J19 J18 H8 E46 H35 H27 H19 M50 V25
VSS2 VSS99 VSS98 VSS97 VSS96 VSS1 VSS95 VSS94 VSS93 VSS92 VSS91 VSS90 VSS77 VSS87 VSS86 VSS85 VSS3 VSS84 VSS83 VSS82 VSS81 VSS80 VSS79 VSS78 VSS100 VSS76 VSS75 VSS74 VSS73 VSS72 VSS71 VSS70 VSS69 VSS68 VSS67 VSS66 VSS88 VSS64 VSS63 VSS62 VSS61 VSS60 VSS59 VSS58 VSS57 VSS40 VSS56 VSS55 VSS89 VSS101
VSS102 VSS53 VSS52 VSS51 VSS50 VSS49 VSS48 VSS47 VSS46 VSS45 VSS44 VSS43 VSS42 VSS41 VSS39 VSS38 VSS37 VSS36 VSS35 VSS34 VSS33 VSS32 VSS31 VSS30 VSS65 VSS29 VSS28 VSS27 VSS26 VSS25 VSS24 VSS23 VSS4 VSS22 VSS21 VSS20 VSS19 VSS18 VSS17 VSS16 VSS15 VSS14 VSS13 VSS12 VSS11 VSS10 VSS9 VSS8 VSS7 VSS6 VSS5
Y24 G30 G28 G26 G22 G14 G12 F5 F35 F32 F27 F24 F19 E51 E35 E19 D42 D40 D38 D32 D27 D24 D16 D10 J42 C47 C39 C36 C30 C3 C28 C22 AW41 BJ7 BJ47 BJ43 BJ39 BJ35 BJ31 BJ27 BJ23 BJ19 BJ15 BJ11 BG5 BG49 BG40 BG38 BG36 BG35 BG34
12 OF 13
FH8066501715905-QHA_FCBGA151170
@ UC2M CHV_MCP_EDS
Power-VSS
F1 C1 BH53 BH52 BH2 BH1 BG53 BG1 B52 B2 A6 A5 M24 A7 BF50 BF4 BB50 BB4 BG47 Y9 Y50 Y45 Y40 Y4 Y38 Y29 Y22 Y21 Y19 Y16 Y14 Y10 P4 L41 P36
VSS_NCTF VSS_NCTF VSS_NCTF

Main Func = XDP

+1.8VS_XDP_CD connect to which power
+1.8VS or +1.8VLAW
PDG is connect to +V1P8A

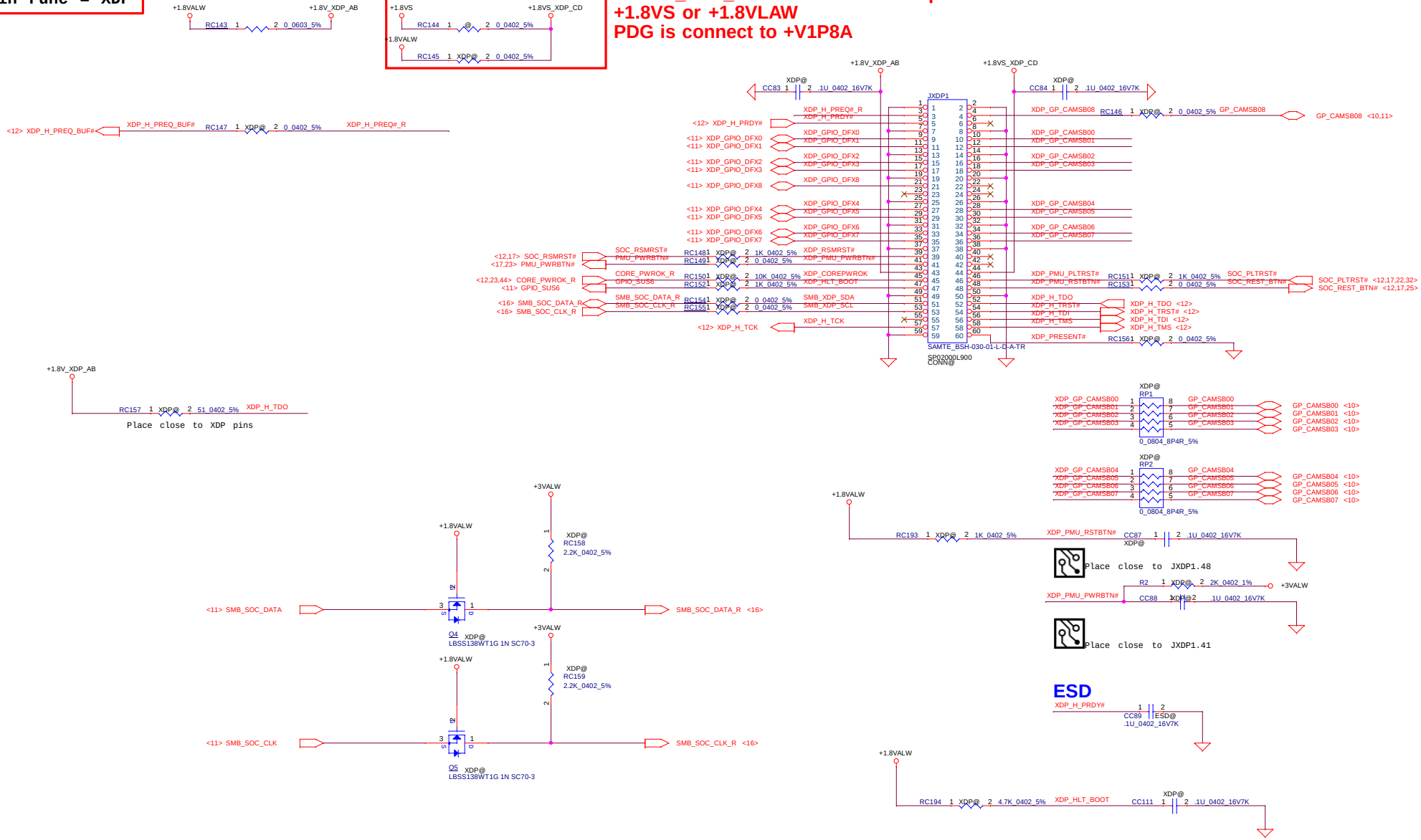

Vinafix.com

Security Classification	Compal Secret Data		
Issued Date	2014/11/10	Deciphered Date	2015/11/25

THIS SHEET OF ENGINEERING DRAWING IS THE PROPRIETARY PROPERTY OF COMPAL ELECTRONICS, INC. AND CONTAINS CONFIDENTIAL AND TRADE SECRET INFORMATION. THIS SHEET MAY NOT BE TRANSFERED FROM THE CUSTODY OF THE COMPETENT DIVISION OF R&D DEPARTMENT EXCEPT AS AUTHORIZED BY COMPAL ELECTRONICS, INC. NEITHER THIS SHEET NOR THE INFORMATION IT CONTAINS MAY BE USED BY OR DISCLOSED TO ANY THIRD PARTY WITHOUT PRIOR WRITTEN CONSENT OF COMPAL ELECTRONICS, INC.

Compal Electronics, Inc.

Title: **P16-Intel Debug**

Size | Document Number: **LA-E372P** | Rev: 0.2

Date: Monday, July 25, 2016 | Sheet 16 of 47

Main Func = Level Shift

POWER ON SEQUENCE

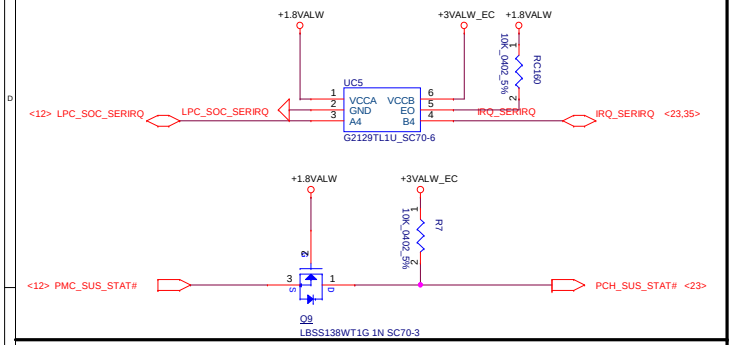

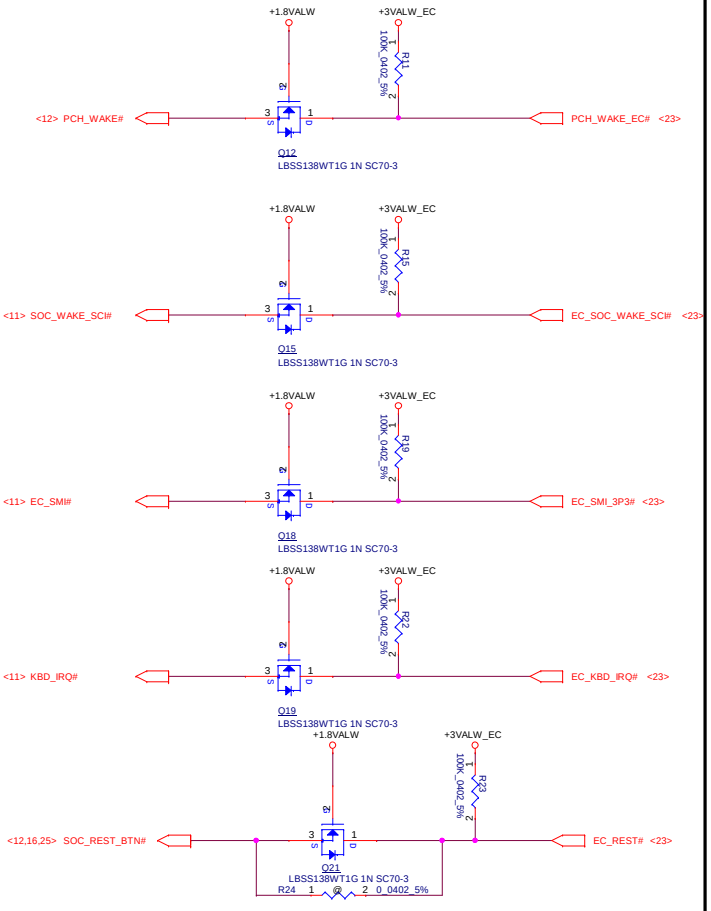

Vinafix.com

POWER ON SEQUENCE

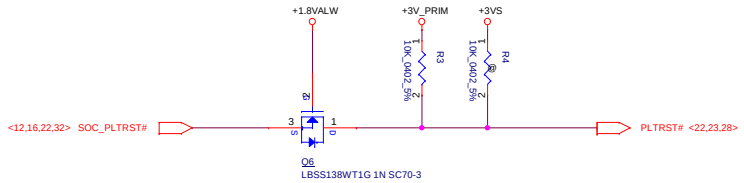

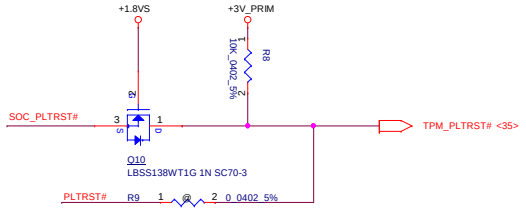

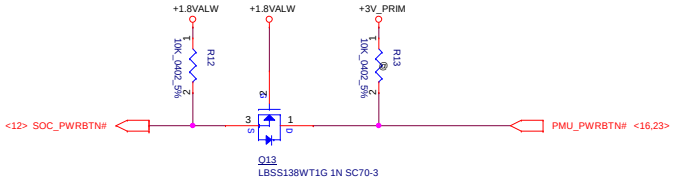

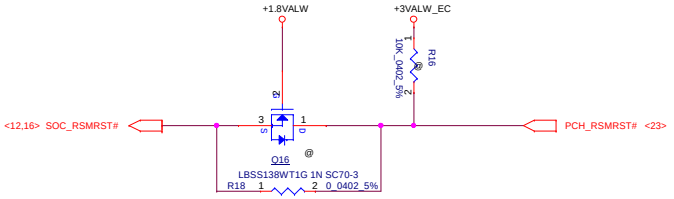

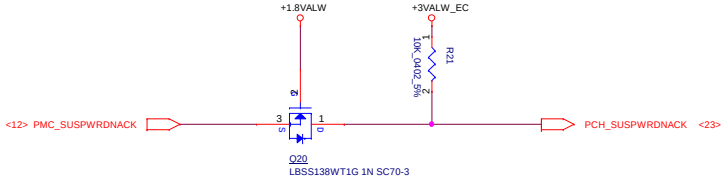

POWER ON SEQUENCE

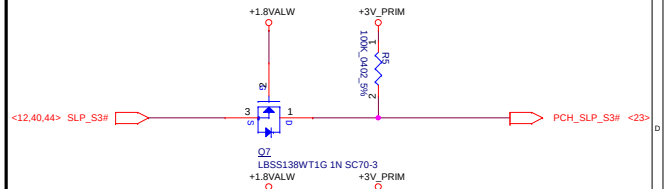

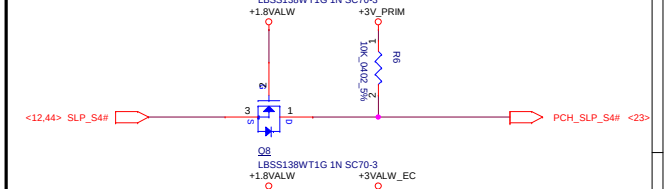

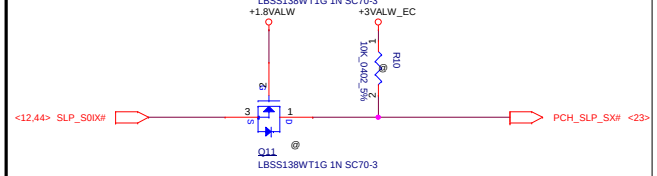

USB OC

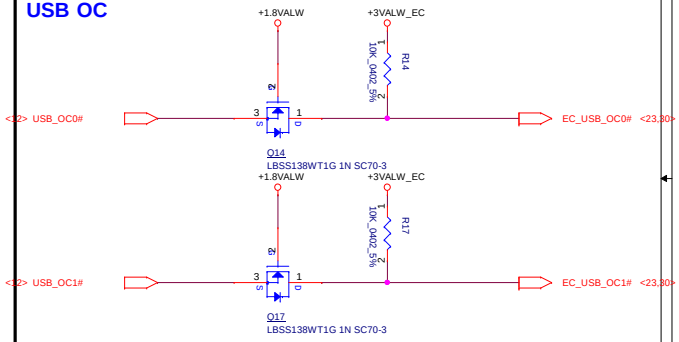

Security Classification	Compal Secret Data		
Issued Date	2014/11/10	Deciphered Date	2015/11/25

THIS SHEET OF ENGINEERING DRAWING IS THE PROPRIETARY PROPERTY OF COMPAL ELECTRONICS, INC. AND CONTAINS CONFIDENTIAL AND TRADE SECRET INFORMATION. THIS SHEET MAY NOT BE TRANSFERED FROM THE CUSTODY OF THE COMPETENT DIVISION OF R&D DEPARTMENT EXCEPT AS AUTHORIZED BY COMPAL ELECTRONICS, INC. NEITHER THIS SHEET NOR THE INFORMATION IT CONTAINS MAY BE USED BY OR DISCLOSED TO ANY THIRD PARTY WITHOUT PRIOR WRITTEN CONSENT OF COMPAL ELECTRONICS, INC.

Compal Electronics, Inc.

Title: **P17-Level Shift-1**

Size: | Document Number: **LA-E372P** | Rev: 0.2

Date: Sunday, July 17, 2016 | Sheet 17 of 47

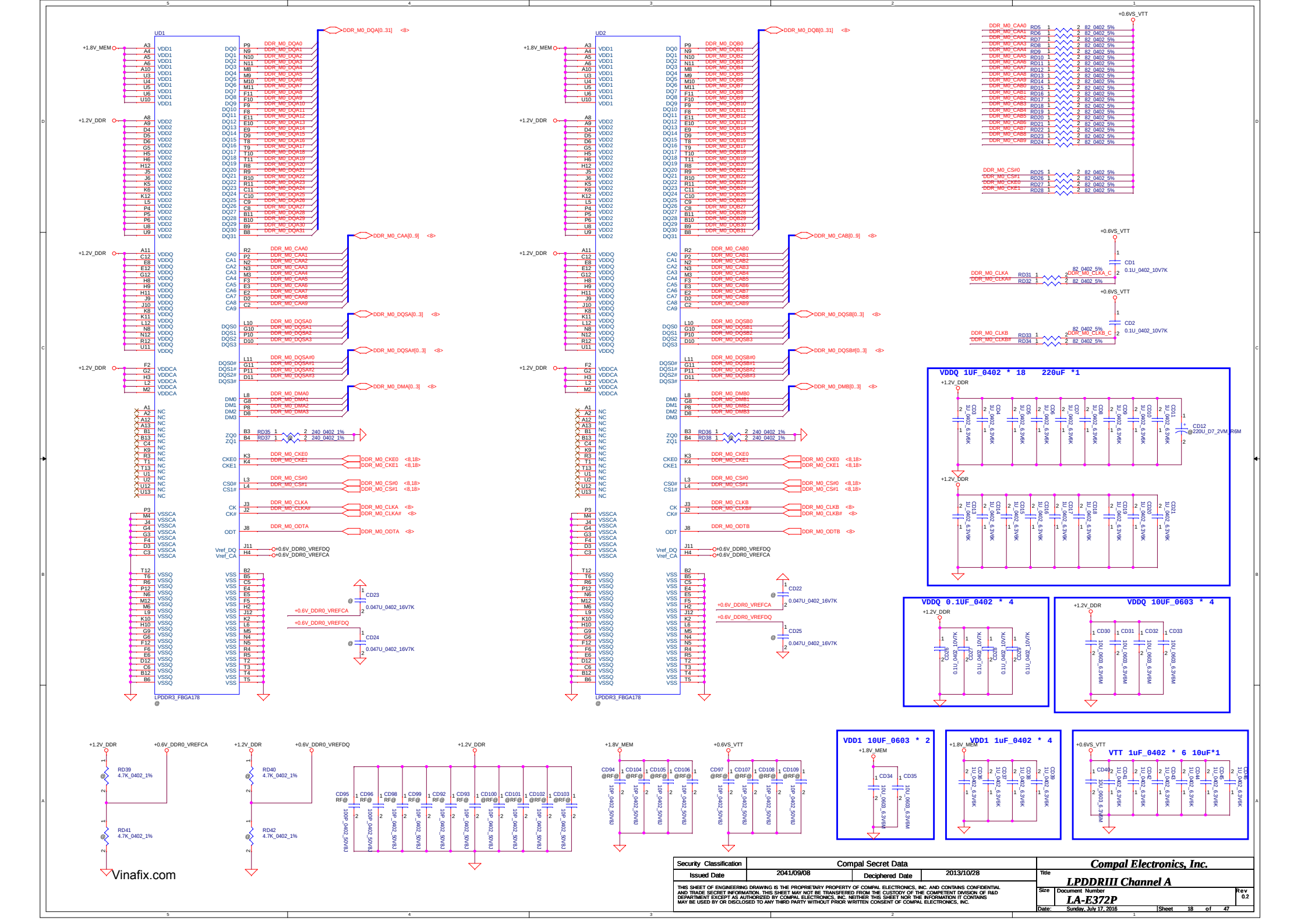

Security Classification	Compal Secret Data		
Issued Date	2041/09/08	Deciphered Date	2013/10/28

THIS SHEET OF ENGINEERING DRAWING IS THE PROPRIETARY PROPERTY OF COMPAL ELECTRONICS, INC. AND CONTAINS CONFIDENTIAL AND TRADE SECRET INFORMATION. THIS SHEET MAY NOT BE TRANSFERED FROM THE CUSTODY OF THE COMPETENT DIVISION OF R&D DEPARTMENT EXCEPT AS AUTHORIZED BY COMPAL ELECTRONICS, INC. NEITHER THIS SHEET NOR THE INFORMATION IT CONTAINS MAY BE USED BY OR DISCLOSED TO ANY THIRD PARTY WITHOUT PRIOR WRITTEN CONSENT OF COMPAL ELECTRONICS, INC.

Compal Electronics, Inc.

Title: **LPDDRIII Channel A**

Size	Document Number	Rev
	LA-E372P	0.2

Date: Sunday, July 17, 2016 | Sheet 18 of 47

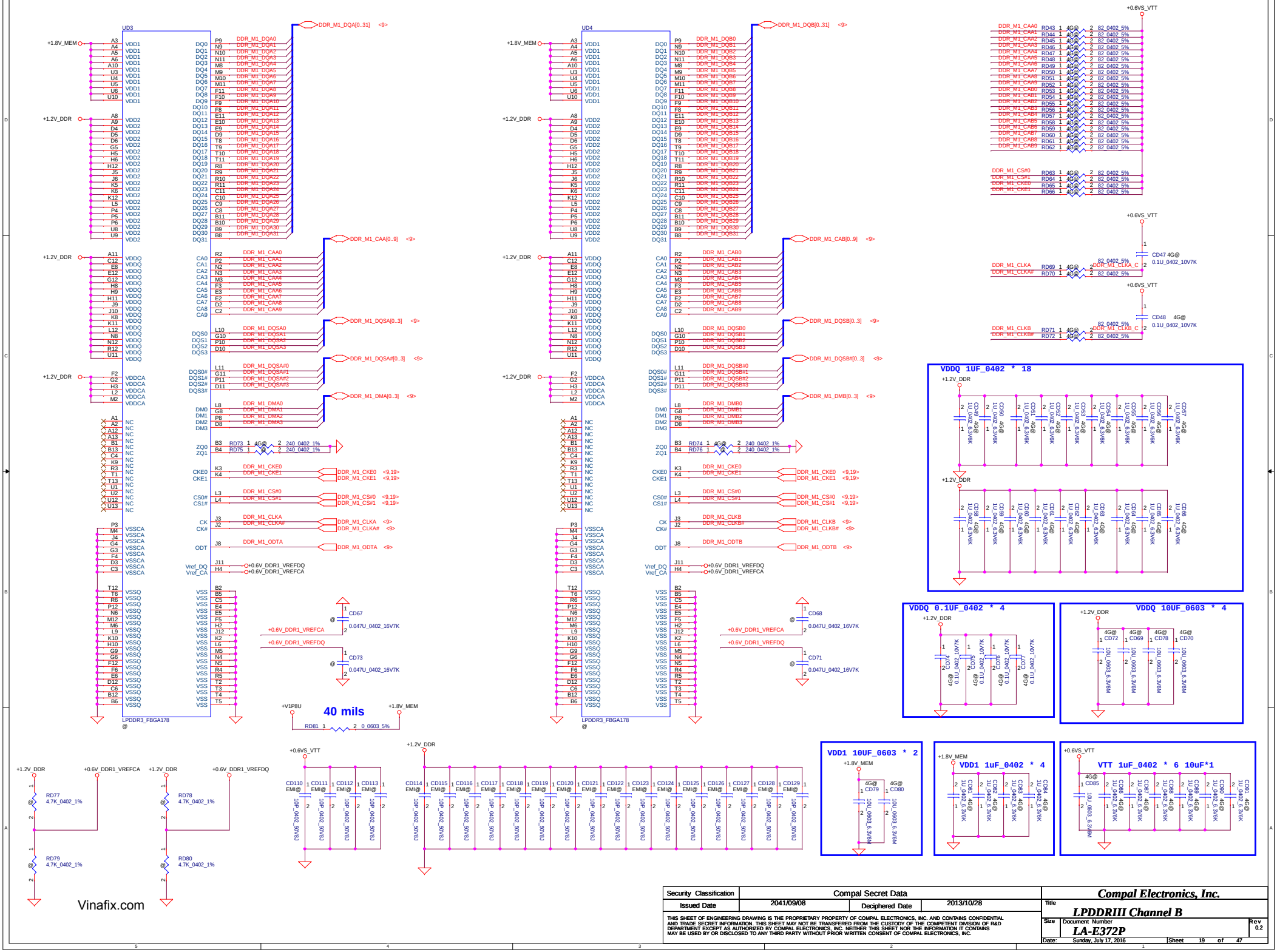

Security Classification	Compal Secret Data		
Issued Date	2041/09/08	Deciphered Date	2013/10/28

THIS SHEET OF ENGINEERING DRAWING IS THE PROPRIETARY PROPERTY OF COMPAL ELECTRONICS, INC. AND CONTAINS CONFIDENTIAL AND TRADE SECRET INFORMATION. THIS SHEET MAY NOT BE TRANSFERRED FROM THE CUSTODY OF THE COMPETENT DIVISION OF R&D DEPARTMENT EXCEPT AS AUTHORIZED BY COMPAL ELECTRONICS, INC. NEITHER THIS SHEET NOR THE INFORMATION IT CONTAINS MAY BE USED BY OR DISCLOSED TO ANY THIRD PARTY WITHOUT PRIOR WRITTEN CONSENT OF COMPAL ELECTRONICS, INC.

Compal Electronics, Inc.

Title: **LPDDRIII Channel B**

Size	Document Number	Rev
	LA-E372P	0.2

Date: Sunday, July 17, 2016 Sheet 19 of 47

Main Func = HDMI

45@ ROYALTY HDMI W/LOGO

Part Number	Description
R00000002HM	HDMI W/Logo:R00000002HM

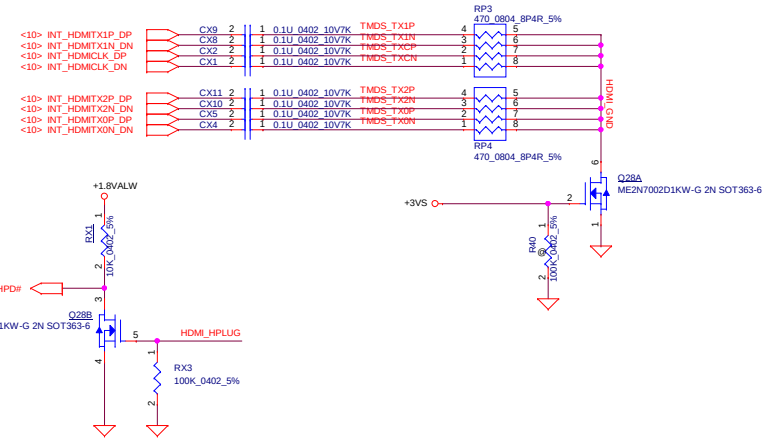

Place close to JHDMI1

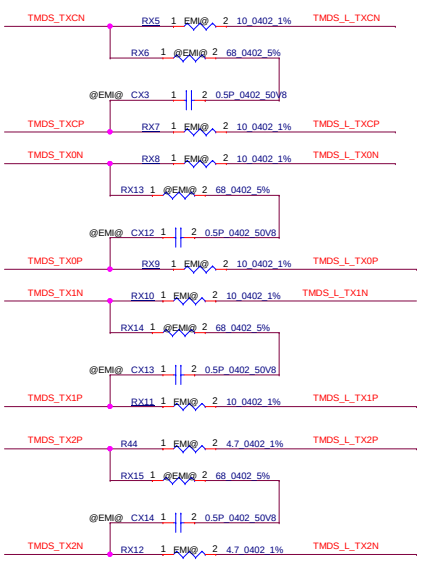

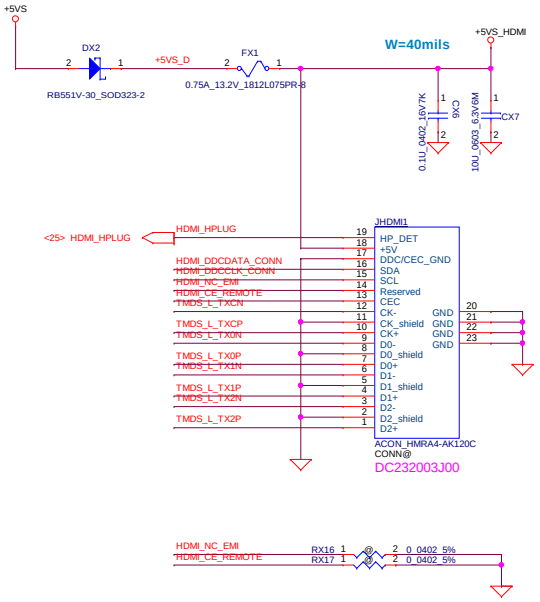

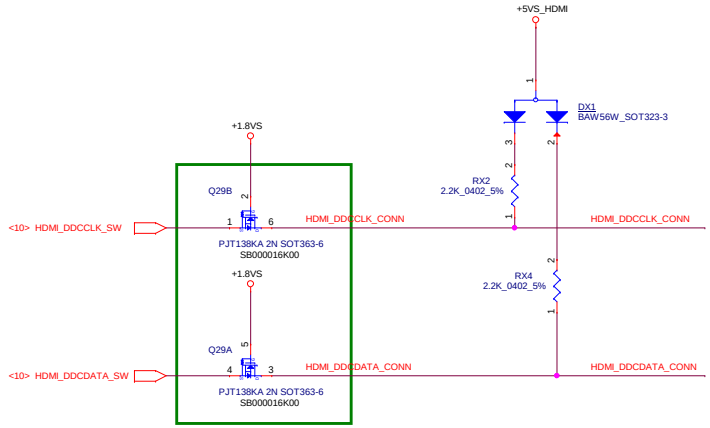

Level Shifter
Vinafix.com

Change the MOS 04/22
Sam

Security Classification	Compal Secret Data		
Issued Date	2014/11/10	Deciphered Date	2015/11/25

THIS SHEET OF ENGINEERING DRAWING IS THE PROPRIETARY PROPERTY OF COMPAL ELECTRONICS, INC. AND CONTAINS CONFIDENTIAL AND TRADE SECRET INFORMATION. THIS SHEET MAY NOT BE TRANSFERED FROM THE CUSTODY OF THE COMPETENT DIVISION OF R&D DEPARTMENT EXCEPT AS AUTHORIZED BY COMPAL ELECTRONICS, INC. NEITHER THIS SHEET NOR THE INFORMATION IT CONTAINS MAY BE USED BY OR DISCLOSED TO ANY THIRD PARTY WITHOUT PRIOR WRITTEN CONSENT OF COMPAL ELECTRONICS, INC.

Compal Electronics, Inc.

Title: **P21-HDMI**

Size: Document Number: **LA-E372P** Rev: 0.2

Date: Monday, July 18, 2016 Sheet 20 of 47

Main Func = Codec

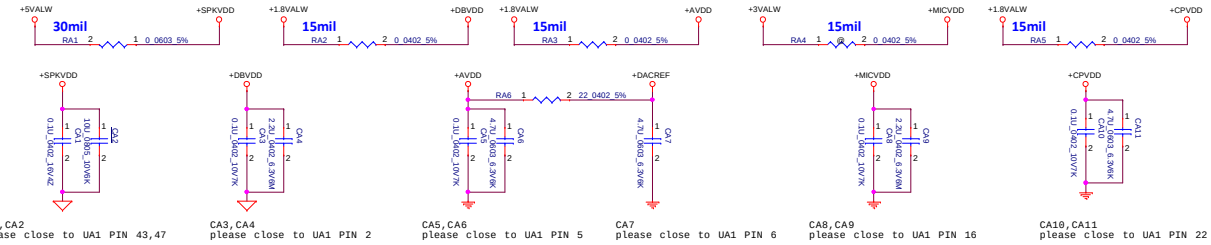

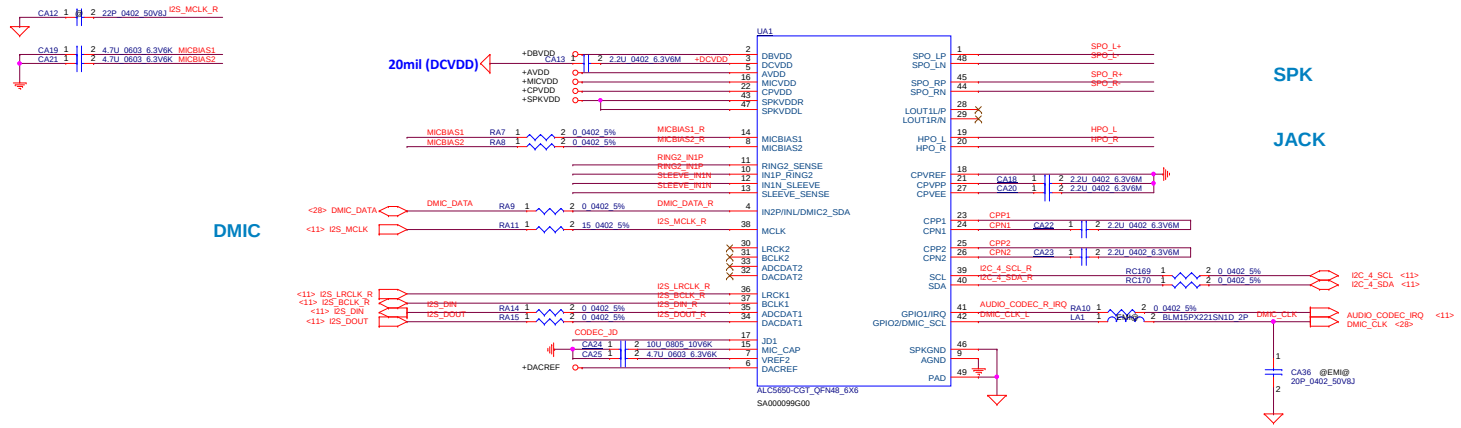

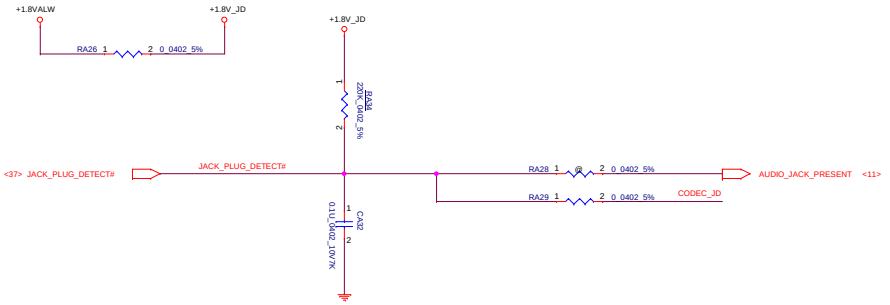

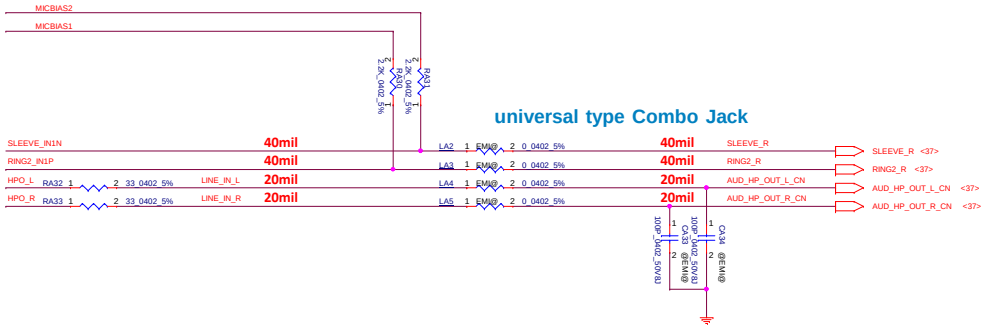

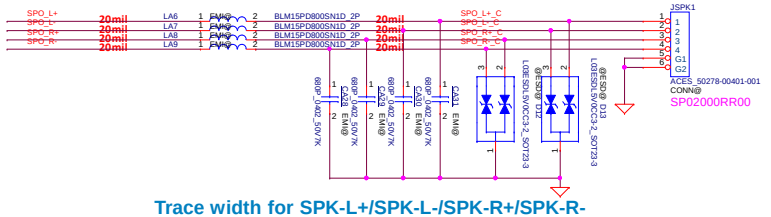

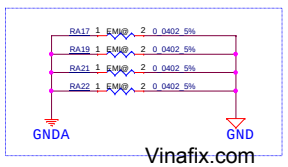

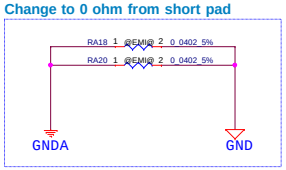

Security Classification	Compal Secret Data		
Issued Date	2014/11/10	Deciphered Date	2015/11/25

THIS SHEET OF ENGINEERING DRAWING IS THE PROPRIETARY PROPERTY OF COMPAL ELECTRONICS, INC. AND CONTAINS CONFIDENTIAL AND TRADE SECRET INFORMATION. THIS SHEET MAY NOT BE TRANSFERED FROM THE CUSTODY OF THE COMPETENT DIVISION OF R&D DEPARTMENT EXCEPT AS AUTHORIZED BY COMPAL ELECTRONICS, INC. NEITHER THIS SHEET NOR THE INFORMATION IT CONTAINS MAY BE USED BY OR DISCLOSED TO ANY THIRD PARTY WITHOUT PRIOR WRITTEN CONSENT OF COMPAL ELECTRONICS, INC.

Compal Electronics, Inc.

Title: P22-Audio Codec ALC5650

Size: | Document Number: LA-E372P | Rev: 0.2

Date: Sunday, July 17, 2016 | Sheet 21 of 47

Main Func = WLAN

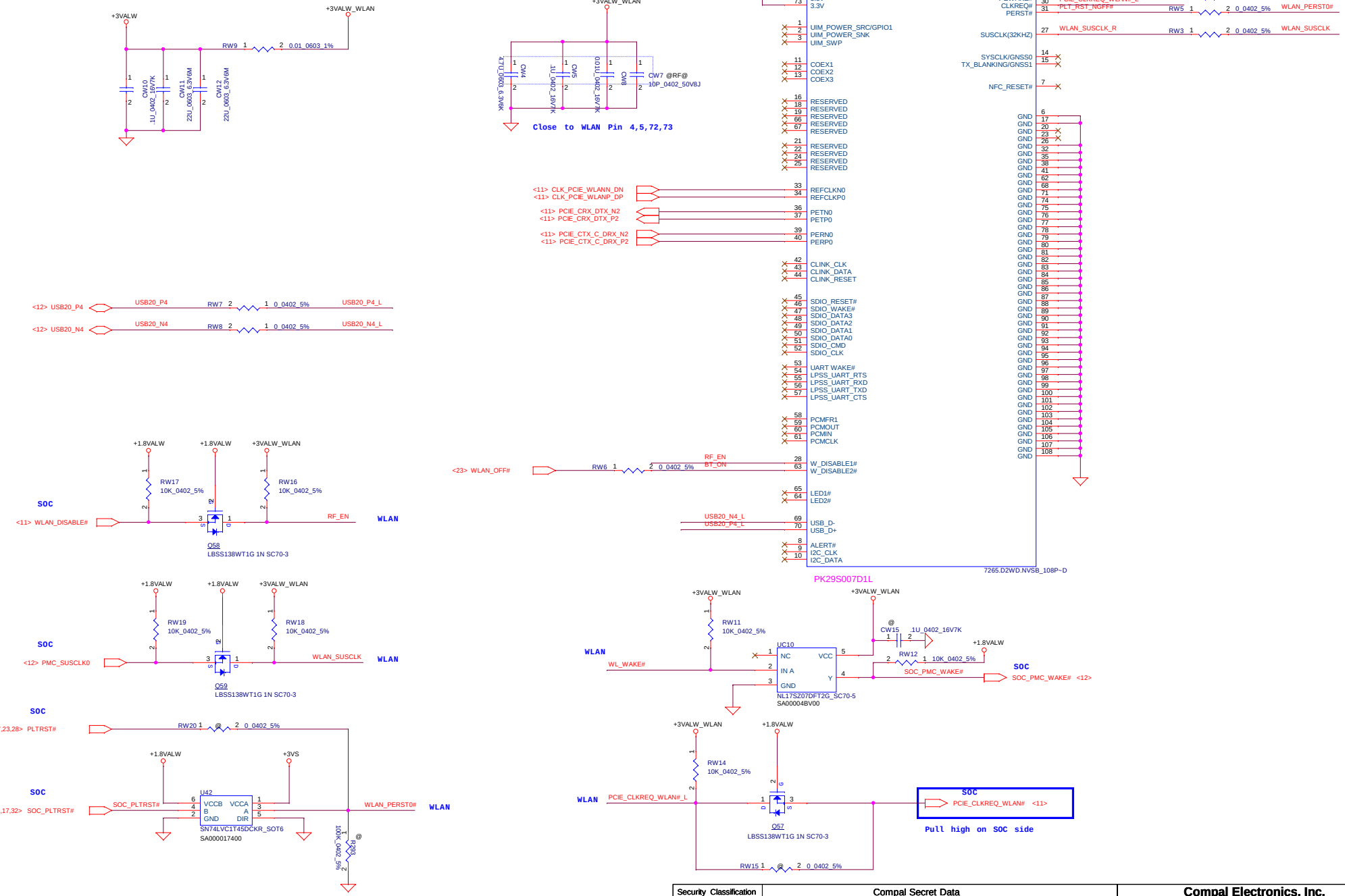

Vinafix.com

Security Classification	Compal Secret Data		
Issued Date	2014/09/10	Deciphered Date	2015/12/10

THIS SHEET OF ENGINEERING DRAWING IS THE PROPRIETARY PROPERTY OF COMPAL ELECTRONICS, INC. AND CONTAINS CONFIDENTIAL AND TRADE SECRET INFORMATION. THIS SHEET MAY NOT BE TRANSFERED FROM THE CUSTODY OF THE COMPETENT DIVISION OF R&D DEPARTMENT EXCEPT AS AUTHORIZED BY COMPAL ELECTRONICS, INC. NEITHER THIS SHEET NOR THE INFORMATION IT CONTAINS MAY BE USED BY OR DISCLOSED TO ANY THIRD PARTY WITHOUT PRIOR WRITTEN CONSENT OF COMPAL ELECTRONICS, INC.

Compal Electronics, Inc.

Title: WLAN-BT/RTC

Size	Document Number	Rev
Custom	LA-E372P	0.2

Date: Sunday, July 17, 2016 | Sheet 22 of 47

Main Func = EC

Board ID

	Kef ka (CR11@)	Sabin (KS11@)
BOARD_ID0	0	1

	Proto	EVT	DVT	PVT
BOARD_ID1	0	0	1	1
BOARD_ID2	0	1	0	1

32 KHz Clock

Batt & Charger IC

Sensor Thermal

Which pin connect to LED? Dual LED/Single White LED

Connect to Battery

W25X40CLSSIG_4Mb/512KB

U4 — MEC1322-LZY-C0-TR_DQFN132_11X11 — SA00007ZY00

LPC XTAL KEYBOARD GPIO SIDEBAND SMBUS/I2C UART GPIO GPIO FLASH POWER GND

Vinafix.com

Security Classification	Compal Secret Data		
Issued Date	2014/11/10	Deciphered Date	2015/11/25

THIS SHEET OF ENGINEERING DRAWING IS THE PROPRIETARY PROPERTY OF COMPAL ELECTRONICS, INC. AND CONTAINS CONFIDENTIAL AND TRADE SECRET INFORMATION. THIS SHEET MAY NOT BE TRANSFERED FROM THE CUSTODY OF THE COMPETENT DIVISION OF R&D DEPARTMENT EXCEPT AS AUTHORIZED BY COMPAL ELECTRONICS, INC. NEITHER THIS SHEET NOR THE INFORMATION IT CONTAINS MAY BE USED BY OR DISCLOSED TO ANY THIRD PARTY WITHOUT PRIOR WRITTEN CONSENT OF COMPAL ELECTRONICS, INC.

Title: P24-EC MEC-1322

Size: — Document Number: LA-E372P — Rev: 0.2

Date: Monday, July 25, 2016 — Sheet 23 of 47

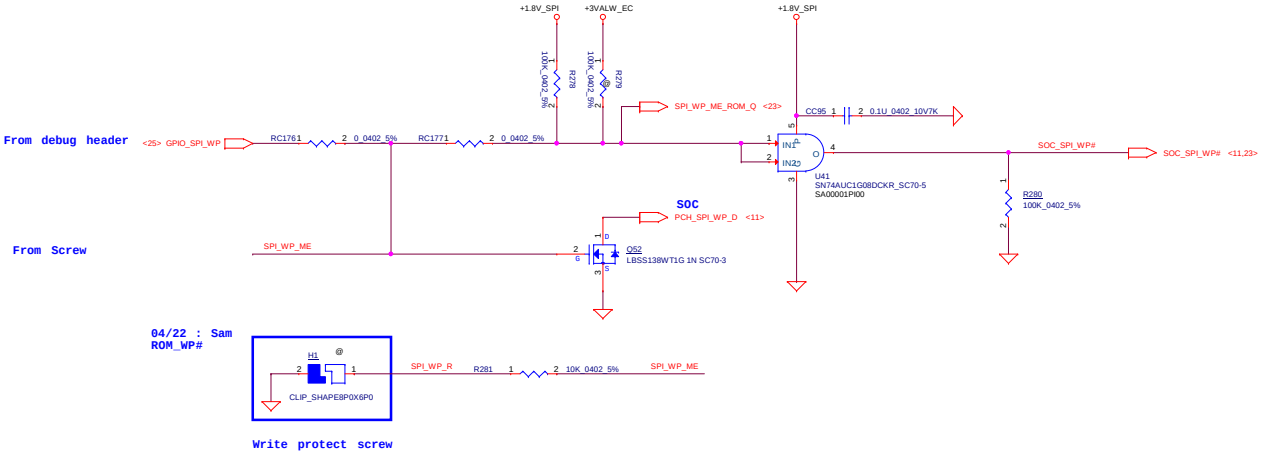

Vinafix.com

Security Classification	Compal Secret Data		
Issued Date	2014/11/10	Deciphered Date	2015/11/25

THIS SHEET OF ENGINEERING DRAWING IS THE PROPRIETARY PROPERTY OF COMPAL ELECTRONICS, INC. AND CONTAINS CONFIDENTIAL AND TRADE SECRET INFORMATION. THIS SHEET MAY NOT BE TRANSFERED FROM THE CUSTODY OF THE COMPETENT DIVISION OF R&D DEPARTMENT EXCEPT AS AUTHORIZED BY COMPAL ELECTRONICS, INC. NEITHER THIS SHEET NOR THE INFORMATION IT CONTAINS MAY BE USED BY OR DISCLOSED TO ANY THIRD PARTY WITHOUT PRIOR WRITTEN CONSENT OF COMPAL ELECTRONICS, INC.

Compal Electronics, Inc.	
Title	P43-WP_ROM
Size	Document Number: LA-E372P
Rev	0.2
Date:	Sunday, July 17, 2016
Sheet	24 of 47

Main Func = Debug for Google

DEBUG CONNECTOR

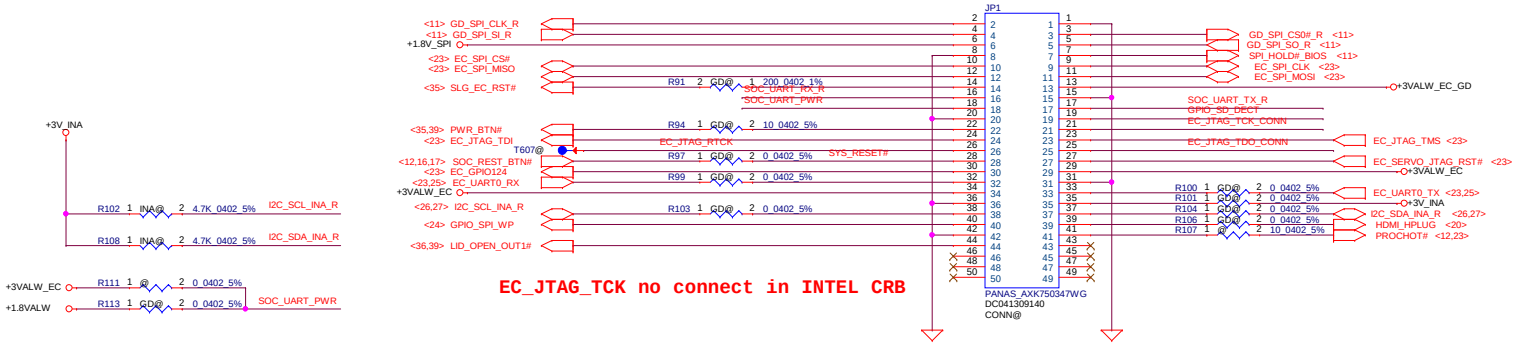

SOC

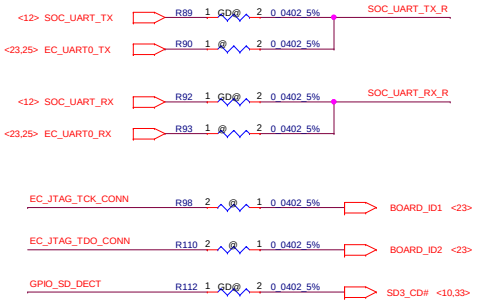

Vinafix.com

Security Classification	Compal Secret Data		
Issued Date	2014/11/10	Deciphered Date	2015/11/25

THIS SHEET OF ENGINEERING DRAWING IS THE PROPRIETARY PROPERTY OF COMPAL ELECTRONICS, INC. AND CONTAINS CONFIDENTIAL AND TRADE SECRET INFORMATION. THIS SHEET MAY NOT BE TRANSFERED FROM THE CUSTODY OF THE COMPETENT DIVISION OF R&D DEPARTMENT EXCEPT AS AUTHORIZED BY COMPAL ELECTRONICS, INC. NEITHER THIS SHEET NOR THE INFORMATION IT CONTAINS MAY BE USED BY OR DISCLOSED TO ANY THIRD PARTY WITHOUT PRIOR WRITTEN CONSENT OF COMPAL ELECTRONICS, INC.

Compal Electronics, Inc.	
Title	P26-Google Debug
Size	Document Number: LA-E372P
Rev	0.2
Date:	Sunday, July 17, 2016
Sheet	25 of 47

INA device

+VBATA_EDP

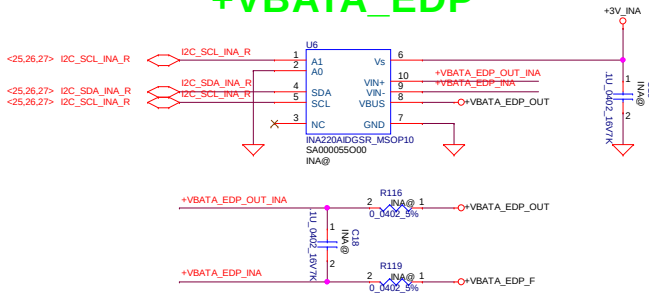

+3VALW_WLAN

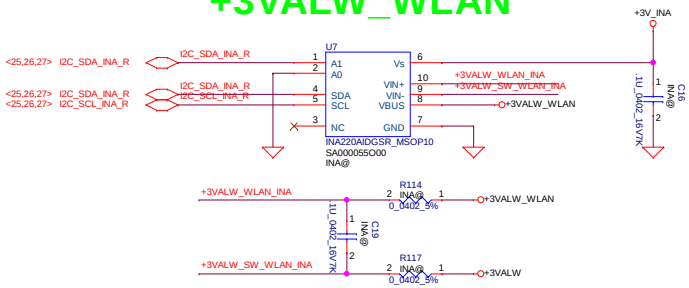

+VCC_CPU(+VCC_CORE)

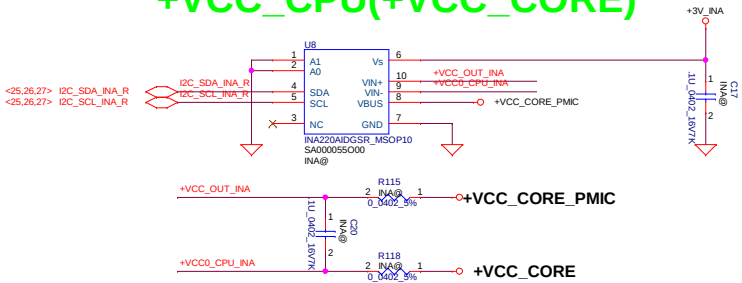

+VDDQ(+1.2V_DDR)

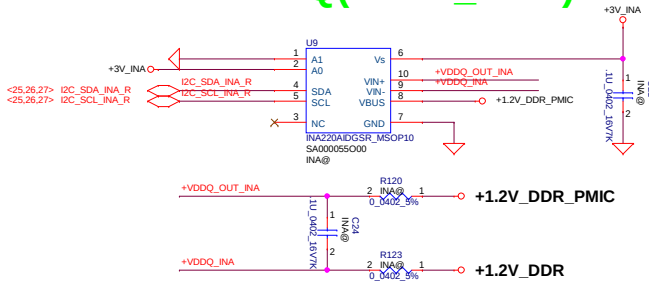

+VGG(+VGG_CORE)

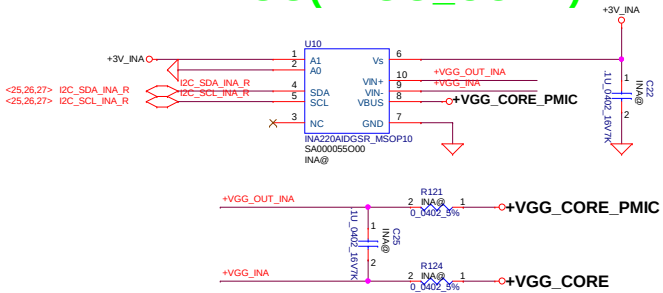

+VNN

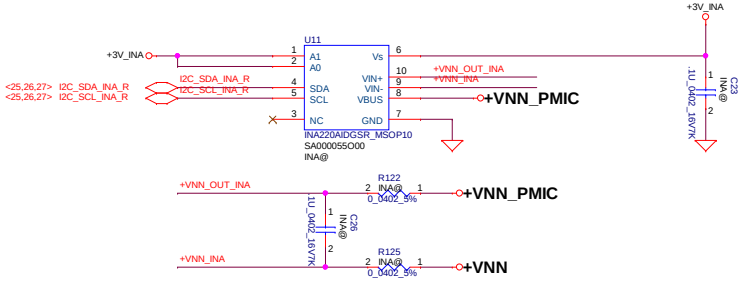

+V1P05A(+1.05VALW)

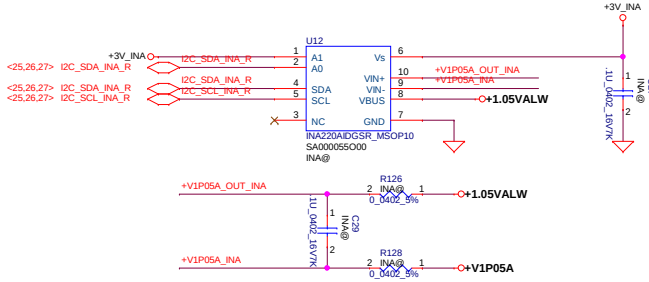

+VDDQ_VTT(+0.6VS_VTT)

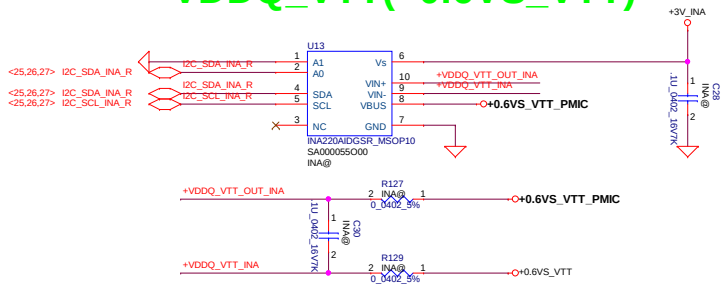

Vinafix.com

Security Classification	Compal Secret Data		
Issued Date	2014/11/10	Deciphered Date	2015/11/25

THIS SHEET OF ENGINEERING DRAWING IS THE PROPRIETARY PROPERTY OF COMPAL ELECTRONICS, INC. AND CONTAINS CONFIDENTIAL AND TRADE SECRET INFORMATION. THIS SHEET MAY NOT BE TRANSFERED FROM THE CUSTODY OF THE COMPETENT DIVISION OF R&D DEPARTMENT EXCEPT AS AUTHORIZED BY COMPAL ELECTRONICS, INC. NEITHER THIS SHEET NOR THE INFORMATION IT CONTAINS MAY BE USED BY OR DISCLOSED TO ANY THIRD PARTY WITHOUT PRIOR WRITTEN CONSENT OF COMPAL ELECTRONICS, INC.

Compal Electronics, Inc.	
Title	P27-INA DEVICES 1
Size	Document Number: LA-E372P
Rev	0.2
Date: Sunday, July 17, 2016	Sheet 26 of 47

INA device

+V3P3DX_EDP(+LCDVDD)

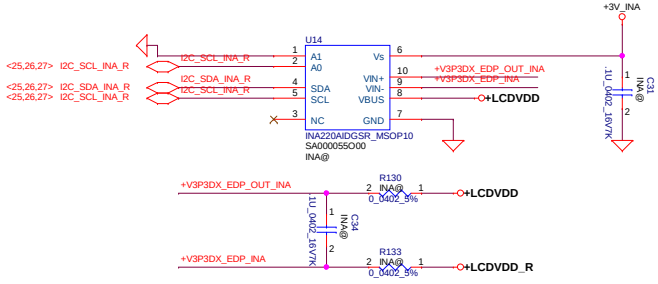

+V3P3A_PRIME(+3V_PRIM)

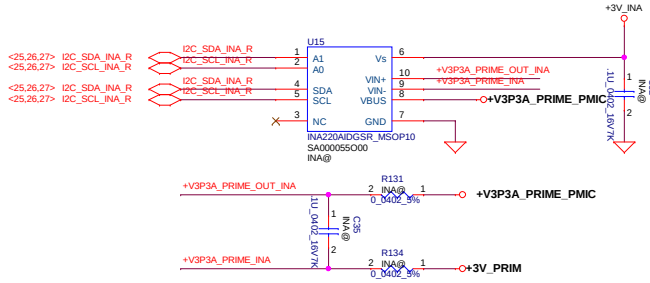

+VBATA

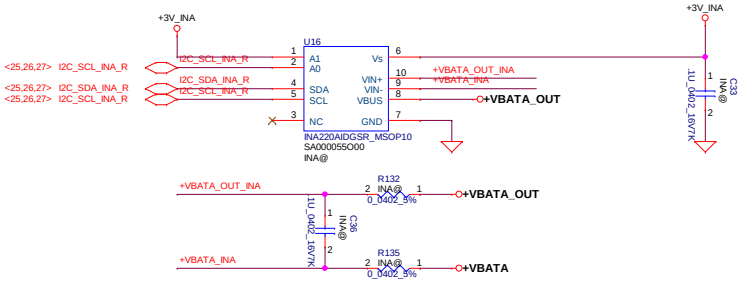

+V1P8A(+1.8VALW)

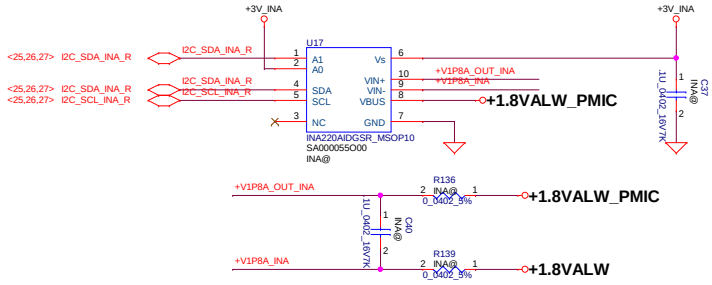

+3VALW_EC

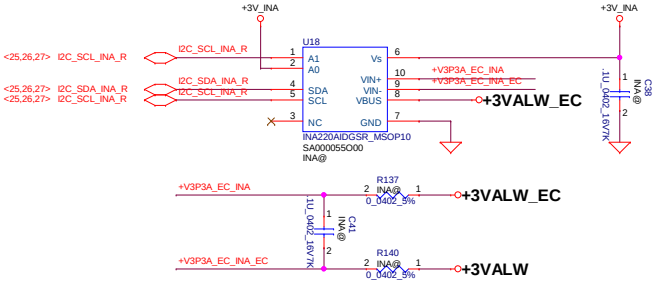

+1.15VALW

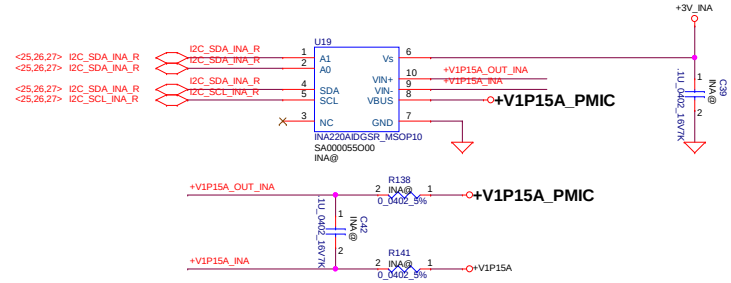

Vinafix.com

Security Classification	Compal Secret Data		Compal Electronics, Inc.
Issued Date	2014/11/10	Deciphered Date	2015/11/25
Title	P28-INA DEVICES 2		
Size	Document Number		Rev
	LA-E372P		0.2
Date: Sunday, July 17, 2016	Sheet 27 of 47		

THIS SHEET OF ENGINEERING DRAWING IS THE PROPRIETARY PROPERTY OF COMPAL ELECTRONICS, INC. AND CONTAINS CONFIDENTIAL AND TRADE SECRET INFORMATION. THIS SHEET MAY NOT BE TRANSFERED FROM THE CUSTODY OF THE COMPETENT DIVISION OF R&D DEPARTMENT EXCEPT AS AUTHORIZED BY COMPAL ELECTRONICS, INC. NEITHER THIS SHEET NOR THE INFORMATION IT CONTAINS MAY BE USED BY OR DISCLOSED TO ANY THIRD PARTY WITHOUT PRIOR WRITTEN CONSENT OF COMPAL ELECTRONICS, INC.

Main Func = eDP

Power Supply Inrush Current 1.5A

Enable 1.5V up(spec)

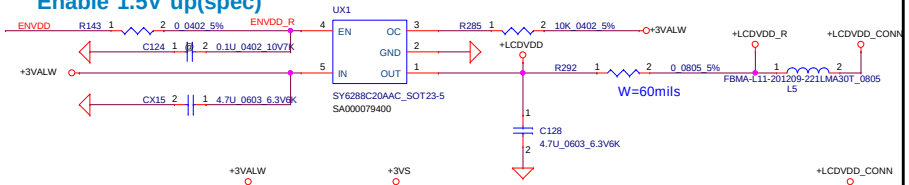

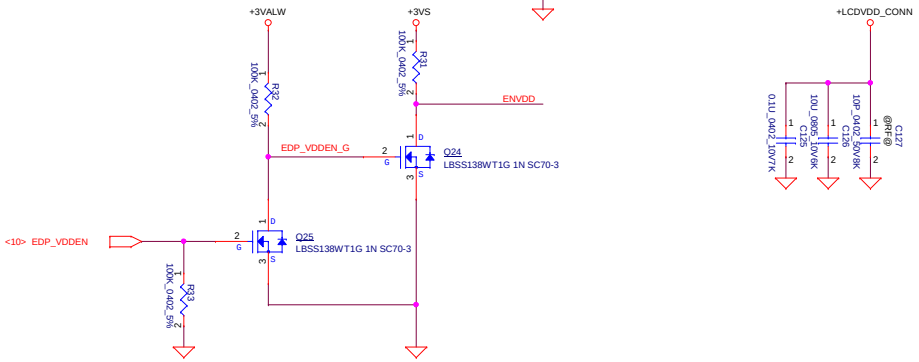

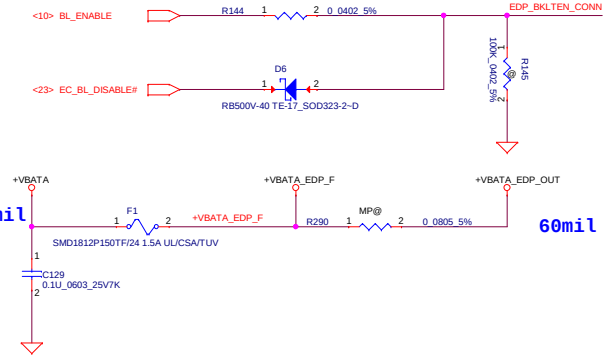

Main Func = Camera

Camera Source

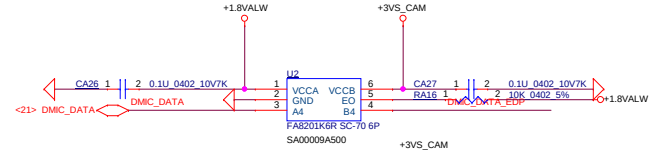

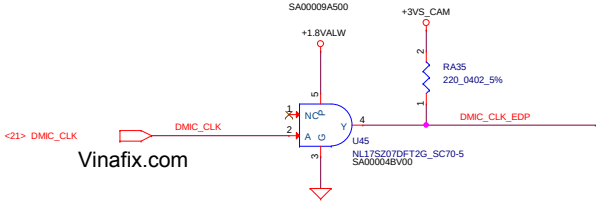

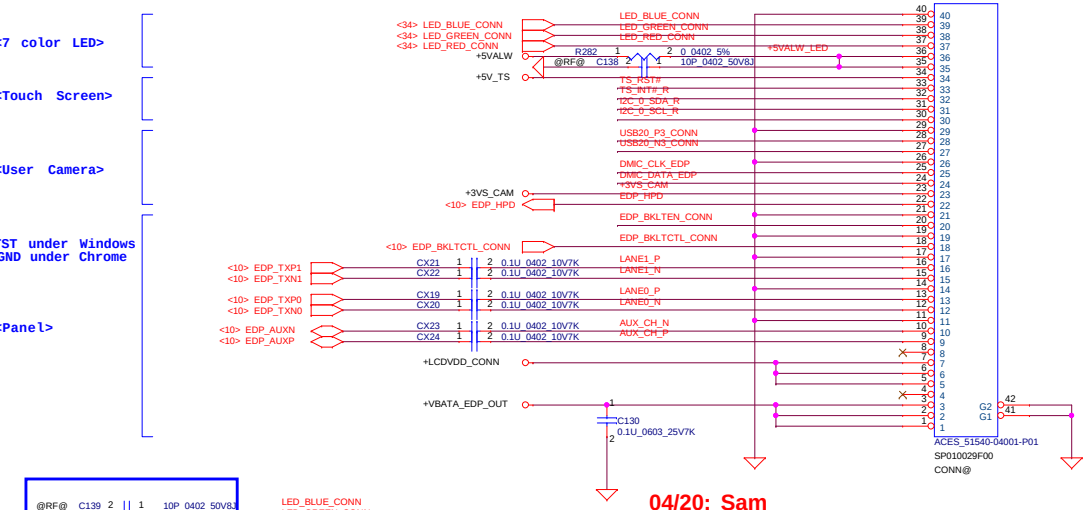

04/20: Sam
Check SPEC with key part team

Have to change pin for conn 4/25

Main Func = Touch Screen

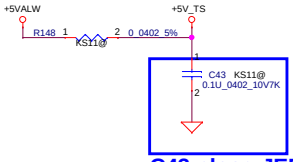

C43 close JEDP1 conn

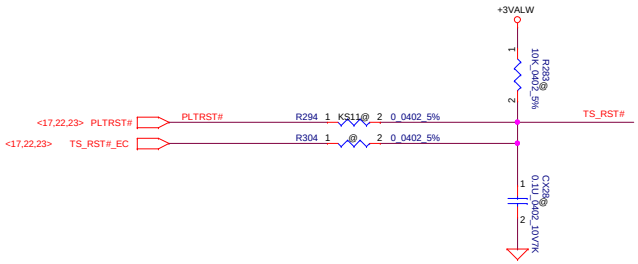

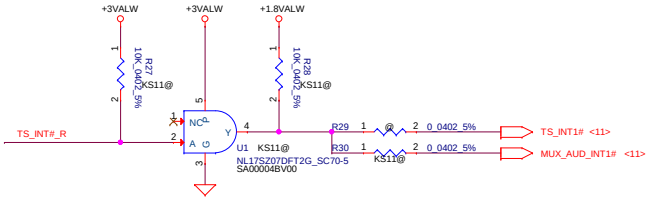

Change MOS 4/25 Sam

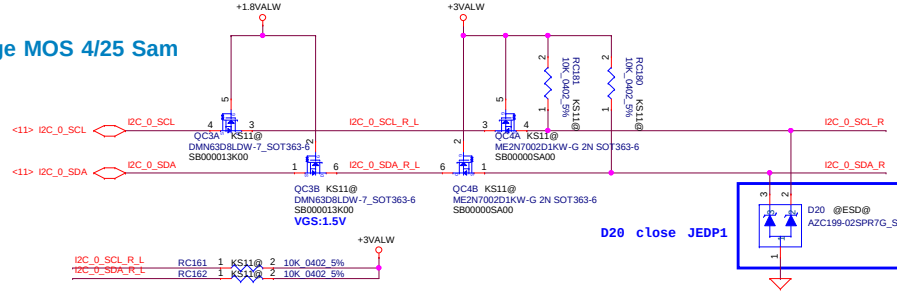

D20 close JEDP1

Security Classification	Compal Secret Data		
Issued Date	2014/11/10	Deciphered Date	2015/11/25

THIS SHEET OF ENGINEERING DRAWING IS THE PROPRIETARY PROPERTY OF COMPAL ELECTRONICS, INC. AND CONTAINS CONFIDENTIAL AND TRADE SECRET INFORMATION. THIS SHEET MAY NOT BE TRANSFERED FROM THE CUSTODY OF THE COMPETENT DIVISION OF R&D DEPARTMENT EXCEPT AS AUTHORIZED BY COMPAL ELECTRONICS, INC. NEITHER THIS SHEET NOR THE INFORMATION IT CONTAINS MAY BE USED BY OR DISCLOSED TO ANY THIRD PARTY WITHOUT PRIOR WRITTEN CONSENT OF COMPAL ELECTRONICS, INC.

Compal Electronics, Inc.

Title: **P29-eDP/TS/Camera**

Size: | Document Number: **LA-E372P** | Rev: 0.2

Date: Thursday, July 28, 2016 | Sheet 28 of 47

USB 2.0 redriver for Power share_JUSB1

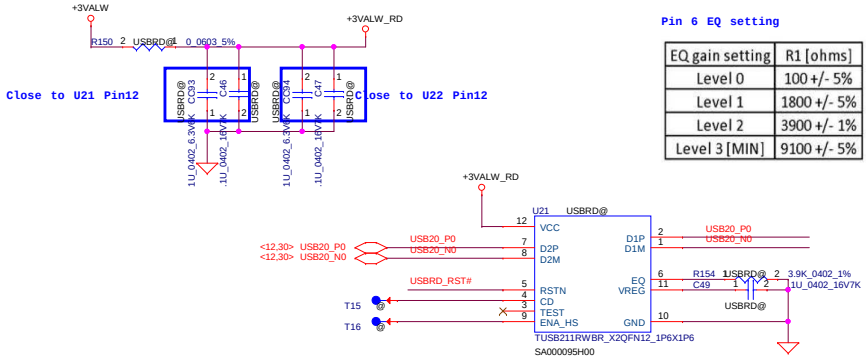

Pin 6 EQ setting

EQ gain setting	R1 [ohms]
Level 0	100 +/- 5%
Level 1	1800 +/- 5%
Level 2	3900 +/- 1%
Level 3 [MIN]	9100 +/- 5%

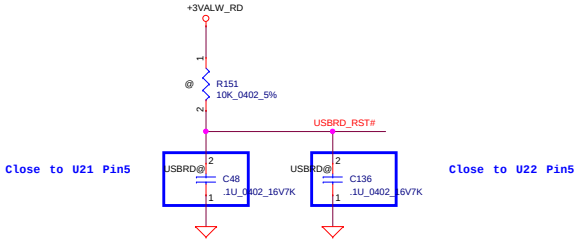

USB 2.0 redriver for Power share_JUSB2

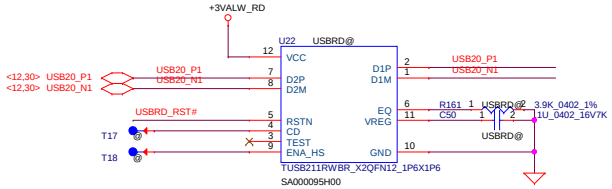

Vinafix.com

Security Classification	Compal Secret Data		
Issued Date	2014/11/10	Deciphered Date	2015/11/25

THIS SHEET OF ENGINEERING DRAWING IS THE PROPRIETARY PROPERTY OF COMPAL ELECTRONICS, INC. AND CONTAINS CONFIDENTIAL AND TRADE SECRET INFORMATION. THIS SHEET MAY NOT BE TRANSFERED FROM THE CUSTODY OF THE COMPETENT DIVISION OF R&D DEPARTMENT EXCEPT AS AUTHORIZED BY COMPAL ELECTRONICS, INC. NEITHER THIS SHEET NOR THE INFORMATION IT CONTAINS MAY BE USED BY OR DISCLOSED TO ANY THIRD PARTY WITHOUT PRIOR WRITTEN CONSENT OF COMPAL ELECTRONICS, INC.

Compal Electronics, Inc.			
Title: P30-USB2.0 redriver			
Size	Document Number: LA-E372P		Rev: 0.2
Date: Sunday, July 17, 2016	Sheet 29 of 47		

Main Func = USB3.0

USB 3.0 Port 1

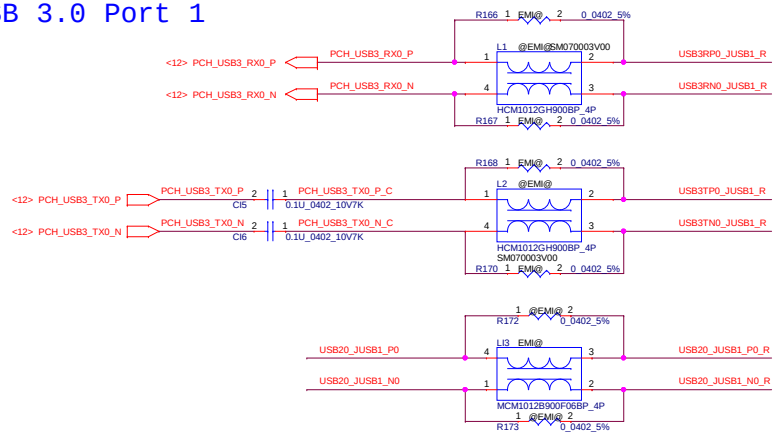

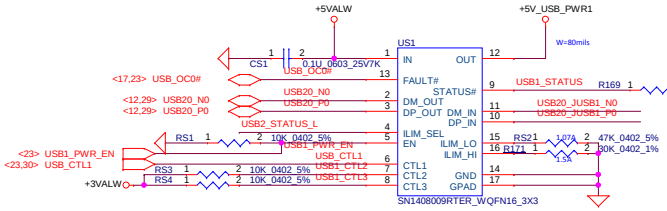

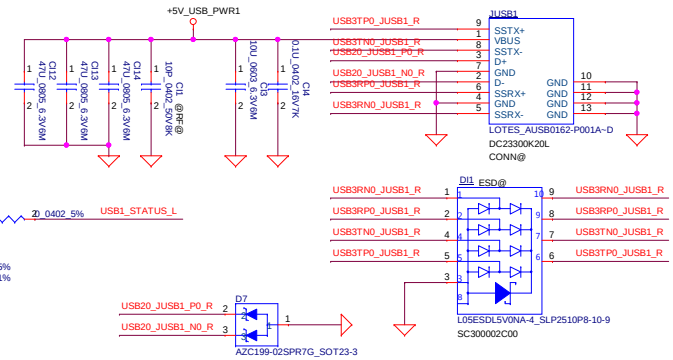

USB 3.0 Port 1 switch current CTRL

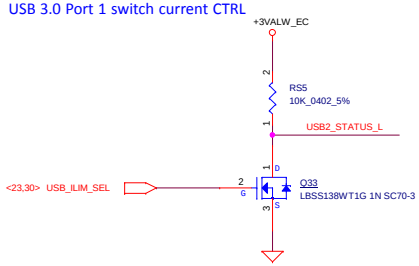

USB 3.0 Port 2 switch current CTRL

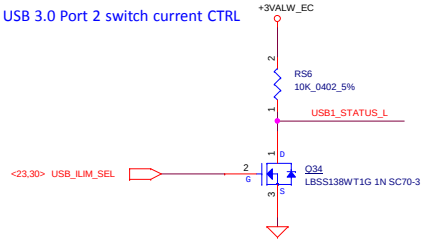

USB 3.0 Port 2

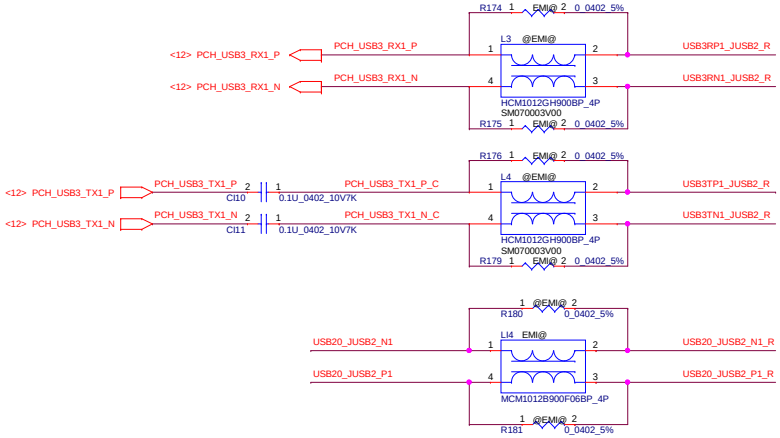

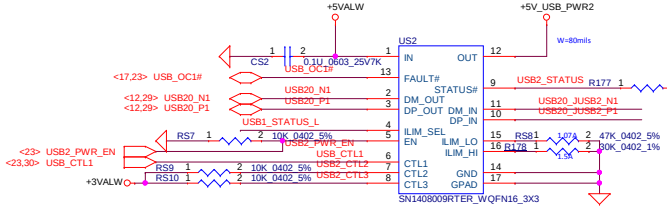

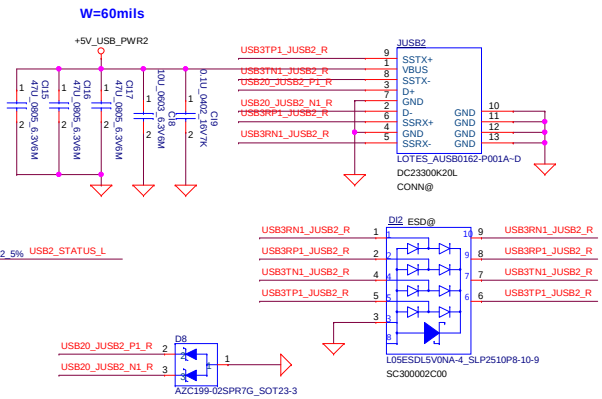

Vinafix.com

Security Classification	Compal Secret Data		
Issued Date	2014/11/10	Deciphered Date	2015/11/25

THIS SHEET OF ENGINEERING DRAWING IS THE PROPRIETARY PROPERTY OF COMPAL ELECTRONICS, INC. AND CONTAINS CONFIDENTIAL AND TRADE SECRET INFORMATION. THIS SHEET MAY NOT BE TRANSFERED FROM THE CUSTODY OF THE COMPETENT DIVISION OF R&D DEPARTMENT EXCEPT AS AUTHORIZED BY COMPAL ELECTRONICS, INC. NEITHER THIS SHEET NOR THE INFORMATION IT CONTAINS MAY BE USED BY OR DISCLOSED TO ANY THIRD PARTY WITHOUT PRIOR WRITTEN CONSENT OF COMPAL ELECTRONICS, INC.

Compal Electronics, Inc.

Title: **P31-USB3.0**

Size: | Document Number: **LA-E372P** | Rev: 0.2

Date: Wednesday, July 20, 2016 | Sheet 30 of 47

Main Func = ACC sensor (MB)

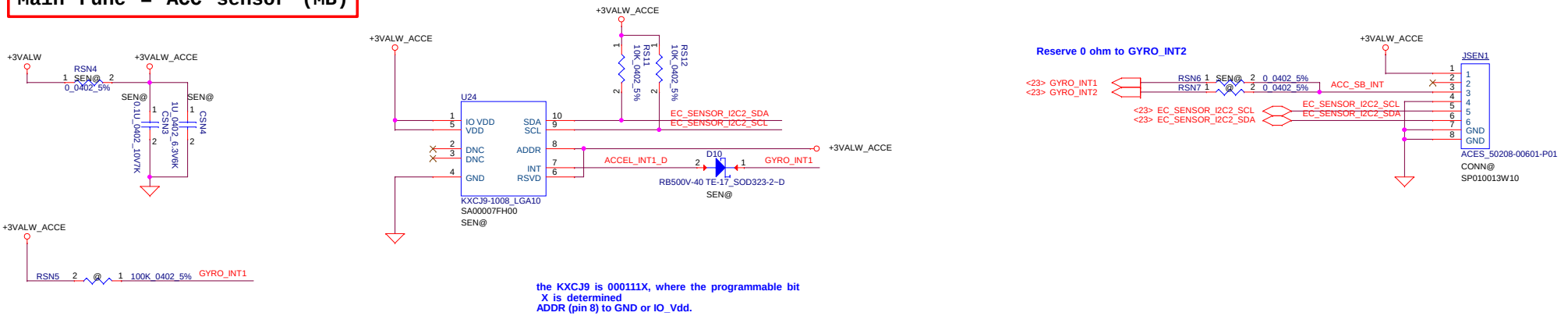

the KXCJ9 is 000111X, where the programmable bit X is determined
ADDR (pin 8) to GND or IO_Vdd.

04/21:Sam
Check interrupt pin connect to which EC

Vinafix.com

Security Classification	Compal Secret Data		
Issued Date	2014/11/10	Deciphered Date	2015/11/25

THIS SHEET OF ENGINEERING DRAWING IS THE PROPRIETARY PROPERTY OF COMPAL ELECTRONICS, INC. AND CONTAINS CONFIDENTIAL AND TRADE SECRET INFORMATION. THIS SHEET MAY NOT BE TRANSFERED FROM THE CUSTODY OF THE COMPETENT DIVISION OF R&D DEPARTMENT EXCEPT AS AUTHORIZED BY COMPAL ELECTRONICS, INC. NEITHER THIS SHEET NOR THE INFORMATION IT CONTAINS MAY BE USED BY OR DISCLOSED TO ANY THIRD PARTY WITHOUT PRIOR WRITTEN CONSENT OF COMPAL ELECTRONICS, INC.

Compal Electronics, Inc.		
Title: P32-Accelerometer		
Size: Custom	Document Number: LA-E372P	Rev: 0.2
Date: Tuesday, July 19, 2016	Sheet 31 of 47	

Main Func = eMMC

Check eMMC power source

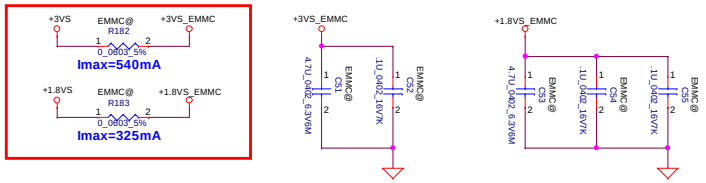

HYNIX

U25 EMMC_H16G@ SA0000A6Z0L
16G_H26M51002HPR

U25 EMMC_H32G@ SA0000A700L
32G_H26M62002GMR

U25 EMMC_H64G@ SA0000A710L
32G_H26M74002EMR

SAMSUNG

U25 EMMC_SAM16G@ SA00009RG0L
16G_KLMAG1JENB-B041007

U25 EMMC_SAM32G@ SA00009QW0L
32G_KLMBG2JENB-B041007

SANDISK

U25 EMMC_S16G@ SA0000A6Y0L
16G SDINADF4-16G-859

U25 EMMC_S32G@ SA00009K91L
32G SDINADF4-32G-859

Use SDIN9DW4-16G symbol

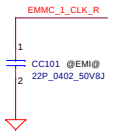

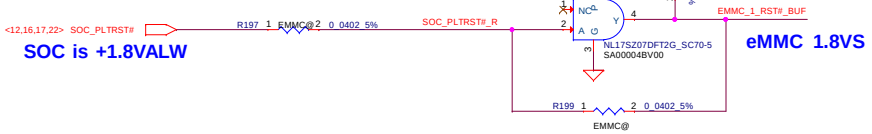

SOC is +1.8VALW

eMMC 1.8VS

Security Classification	Compal Secret Data		
Issued Date	2014/11/10	Deciphered Date	2015/11/25

THIS SHEET OF ENGINEERING DRAWING IS THE PROPRIETARY PROPERTY OF COMPAL ELECTRONICS, INC. AND CONTAINS CONFIDENTIAL AND TRADE SECRET INFORMATION. THIS SHEET MAY NOT BE TRANSFERED FROM THE CUSTODY OF THE COMPETENT DIVISION OF R&D DEPARTMENT EXCEPT AS AUTHORIZED BY COMPAL ELECTRONICS, INC. NEITHER THIS SHEET NOR THE INFORMATION IT CONTAINS MAY BE USED BY OR DISCLOSED TO ANY THIRD PARTY WITHOUT PRIOR WRITTEN CONSENT OF COMPAL ELECTRONICS, INC.

Compal Electronics, Inc.

Title: P33-eMMC

Size | Document Number: LA-E372P | Rev: 0.2

Date: Thursday, July 28, 2016 | Sheet 32 of 47

Vinafix.com

CardReader

SDIO--->micro SD card

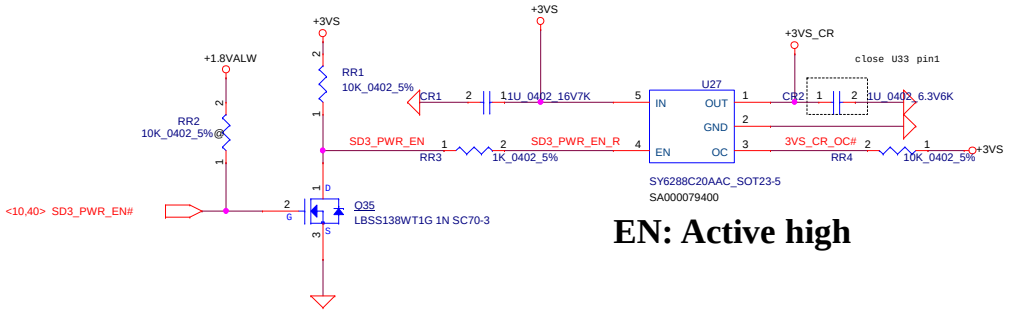

EN: Active high

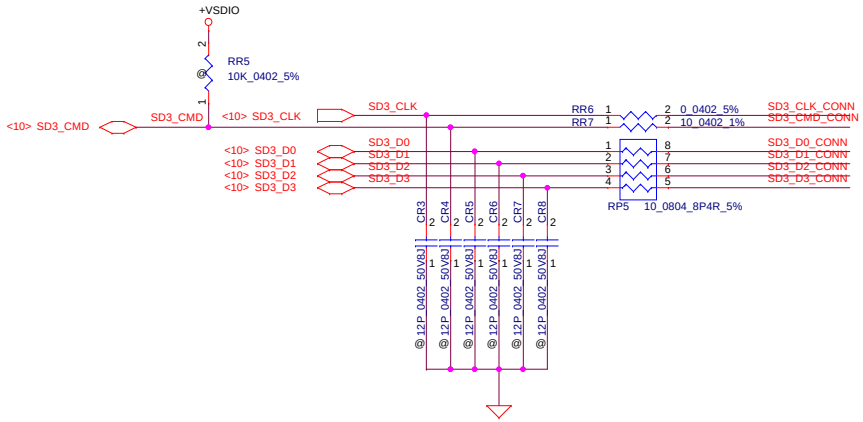

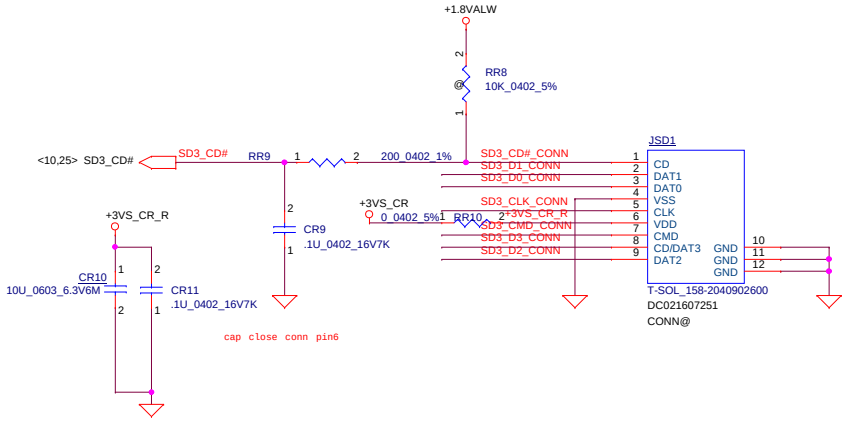

Vinafix.com

Security Classification	Compal Secret Data		
Issued Date	2014/09/10	Deciphered Date	2015/12/10

THIS SHEET OF ENGINEERING DRAWING IS THE PROPRIETARY PROPERTY OF COMPAL ELECTRONICS, INC. AND CONTAINS CONFIDENTIAL AND TRADE SECRET INFORMATION. THIS SHEET MAY NOT BE TRANSFERED FROM THE CUSTODY OF THE COMPETENT DIVISION OF R&D DEPARTMENT EXCEPT AS AUTHORIZED BY COMPAL ELECTRONICS, INC. NEITHER THIS SHEET NOR THE INFORMATION IT CONTAINS MAY BE USED BY OR DISCLOSED TO ANY THIRD PARTY WITHOUT PRIOR WRITTEN CONSENT OF COMPAL ELECTRONICS, INC.

Compal Electronics, Inc.

Title	CARD READER	
Size: Custom	Document Number: LA-E372P	Rev: 0.2
Date: Friday, July 29, 2016	Sheet 33 of 47	

Main Func = LED PWM controller

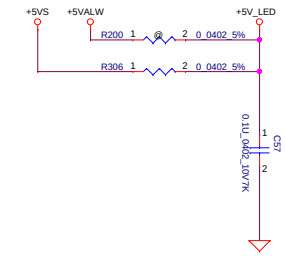

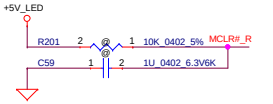

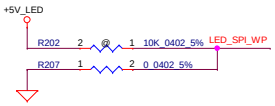

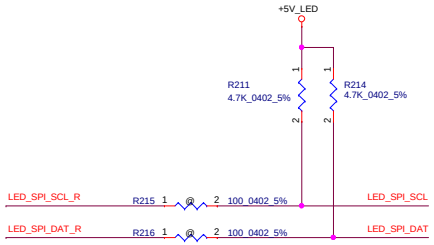

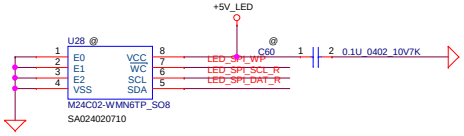

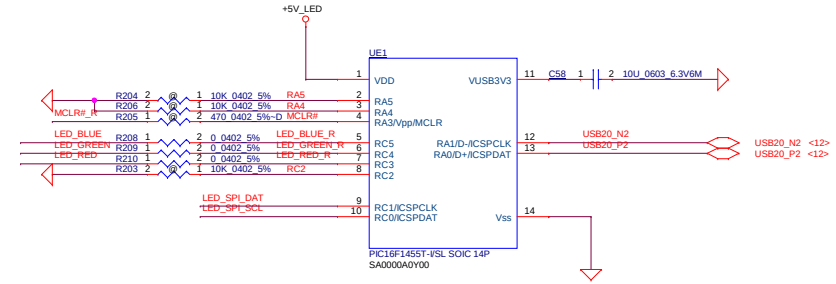

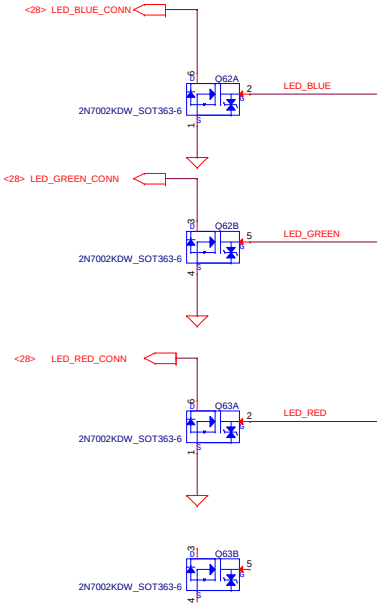

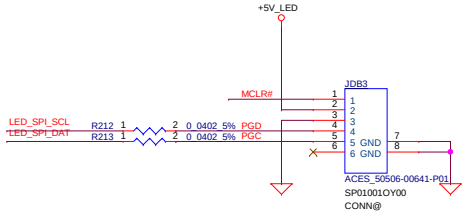

Only reserve connector footprint
Not pop connector for debug

Vinafix.com

Security Classification	Compal Secret Data		
Issued Date	2014/11/10	Deciphered Date	2015/11/25

THIS SHEET OF ENGINEERING DRAWING IS THE PROPRIETARY PROPERTY OF COMPAL ELECTRONICS, INC. AND CONTAINS CONFIDENTIAL AND TRADE SECRET INFORMATION. THIS SHEET MAY NOT BE TRANSFERED FROM THE CUSTODY OF THE COMPETENT DIVISION OF R&D DEPARTMENT EXCEPT AS AUTHORIZED BY COMPAL ELECTRONICS, INC. NEITHER THIS SHEET NOR THE INFORMATION IT CONTAINS MAY BE USED BY OR DISCLOSED TO ANY THIRD PARTY WITHOUT PRIOR WRITTEN CONSENT OF COMPAL ELECTRONICS, INC.

Compal Electronics, Inc.	
Title	P35-LED PWM Controller
Size	Document Number: LA-E372P
Rev	0.2
Date:	Thursday, July 28, 2016
Sheet	34 of 47

Main Func = Holeless reset

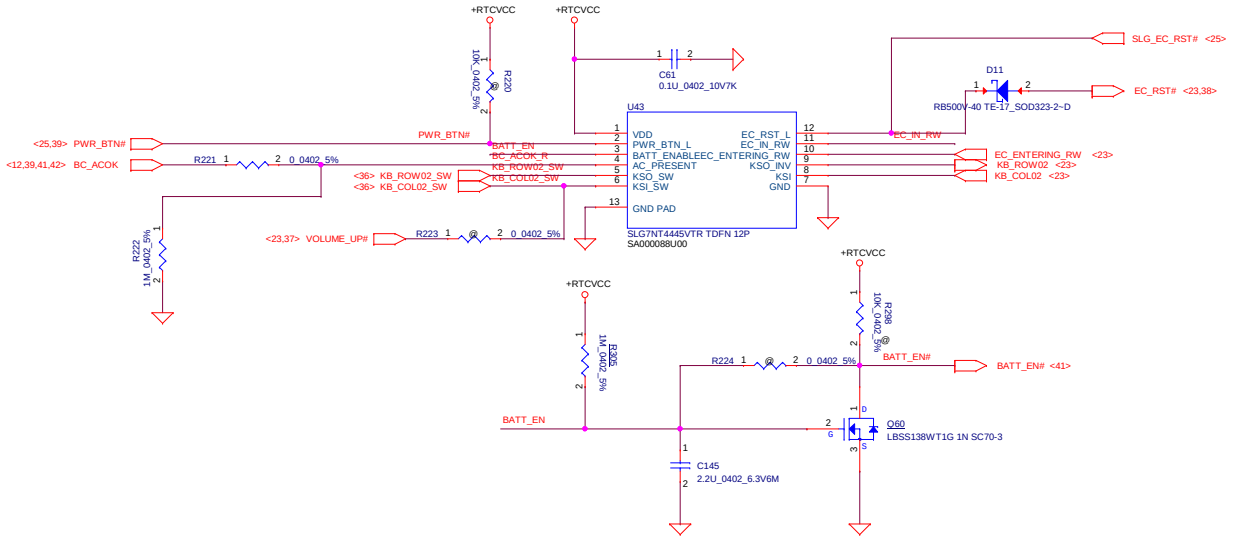

Open Drain

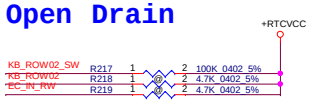

HW RESET

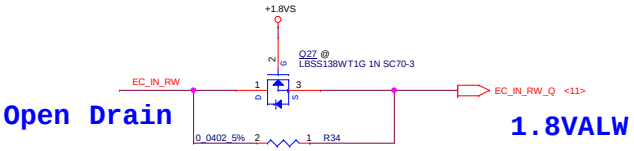

Main Func = TPM

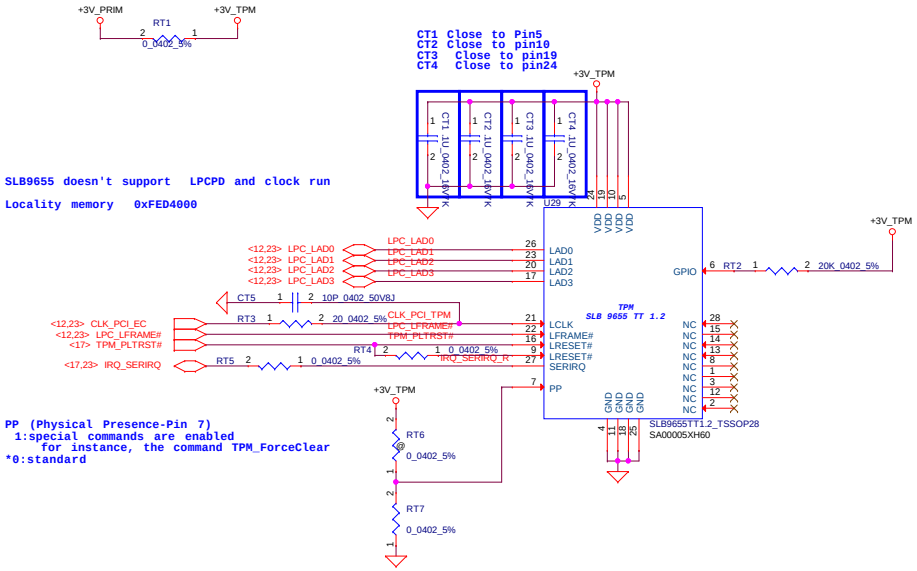

Vinafix.com

Security Classification	Compal Secret Data		
Issued Date	2014/11/10	Deciphered Date	2015/11/25

THIS SHEET OF ENGINEERING DRAWING IS THE PROPRIETARY PROPERTY OF COMPAL ELECTRONICS, INC. AND CONTAINS CONFIDENTIAL AND TRADE SECRET INFORMATION. THIS SHEET MAY NOT BE TRANSFERED FROM THE CUSTODY OF THE COMPETENT DIVISION OF R&D DEPARTMENT EXCEPT AS AUTHORIZED BY COMPAL ELECTRONICS, INC. NEITHER THIS SHEET NOR THE INFORMATION IT CONTAINS MAY BE USED BY OR DISCLOSED TO ANY THIRD PARTY WITHOUT PRIOR WRITTEN CONSENT OF COMPAL ELECTRONICS, INC.

Compal Electronics, Inc.			
Title: P36-Holeless reset/TPM			
Size	Document Number: LA-E372P		Rev: 0.2
Date: Thursday, July 28, 2016	Sheet 35 of 47		

Main Func = LID switch

LID Switch(NB)

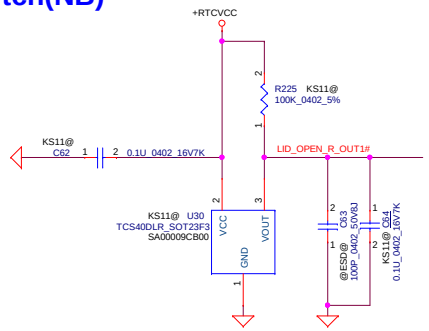

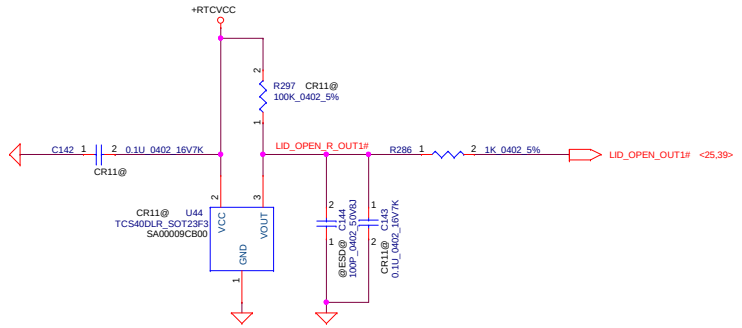

Main Func = Touch pad

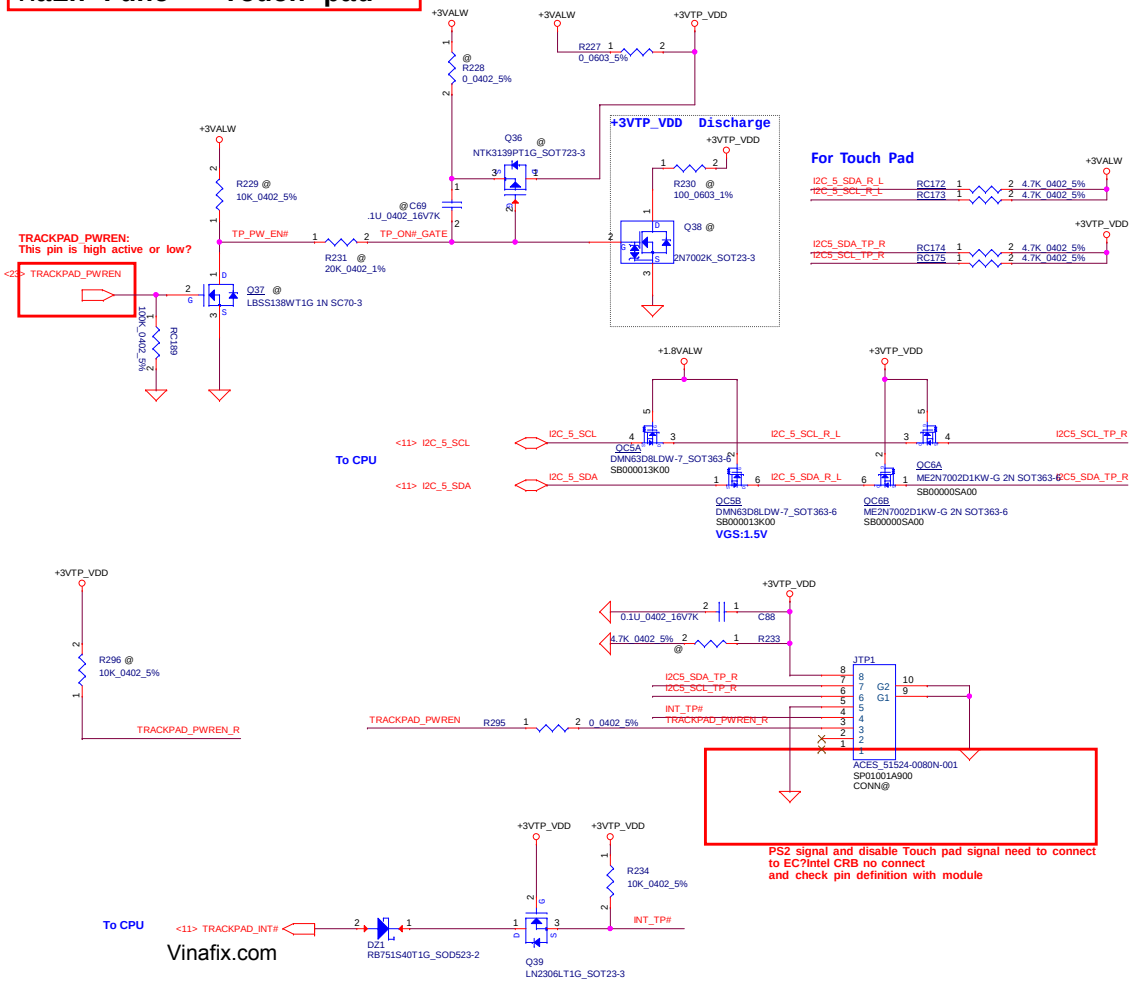

KBD Connector Have to change 04/21 Sam

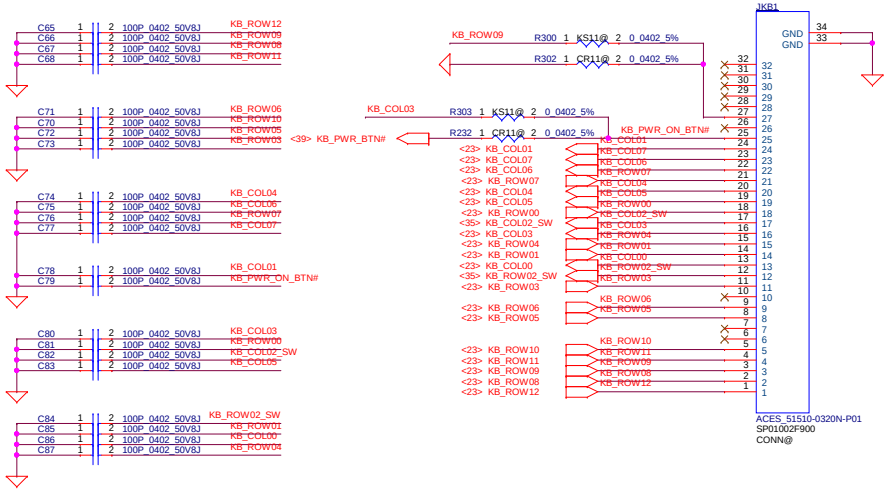

Event	PCH-TP_INT#	PCH-TP_INT#
S0	Interrupt	X
S3	X	Wake
1. Clamshell closed or Lid closed 2. Tablet mode for Convertile design 3.Disable TP function by ht-key	X	X

Security Classification	Compal Secret Data		
Issued Date	2014/11/10	Deciphered Date	2015/11/25

THIS SHEET OF ENGINEERING DRAWING IS THE PROPRIETARY PROPERTY OF COMPAL ELECTRONICS, INC. AND CONTAINS CONFIDENTIAL AND TRADE SECRET INFORMATION. THIS SHEET MAY NOT BE TRANSFERED FROM THE CUSTODY OF THE COMPETENT DIVISION OF R&D DEPARTMENT EXCEPT AS AUTHORIZED BY COMPAL ELECTRONICS, INC. NEITHER THIS SHEET NOR THE INFORMATION IT CONTAINS MAY BE USED BY OR DISCLOSED TO ANY THIRD PARTY WITHOUT PRIOR WRITTEN CONSENT OF COMPAL ELECTRONICS, INC.

Compal Electronics, Inc.

Title: P37-LID/TP/KB

Size | Document Number: LA-E372P | Rev: 0.2

Date: Sunday, July 17, 2016 | Sheet 36 of 47

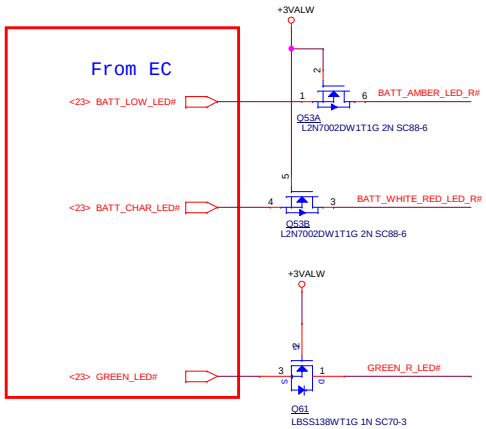

FFC conn (CR11)

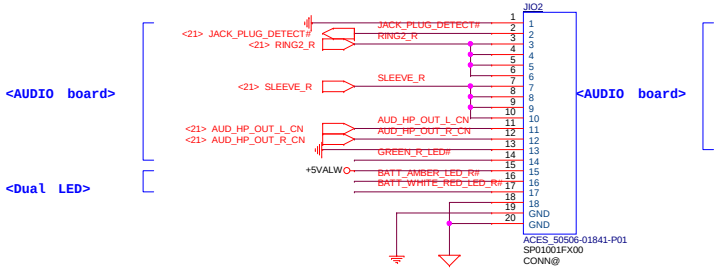

Wire conn (KS11)

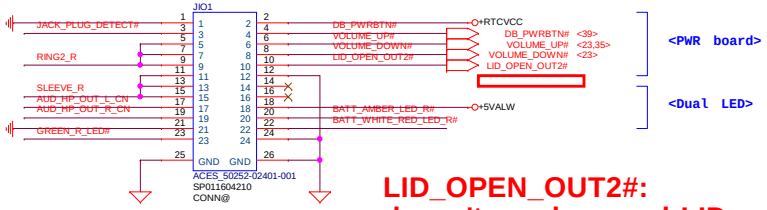

LID_OPEN_OUT2#: doesn't need second LID for 360 degree function ?

Check SB pin definition and schematic

Check with EC which pin can connect

Power Button For corinth 11 and Test(KS11)

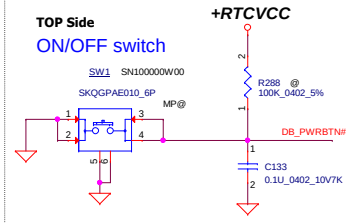

Vinafix.com

Security Classification	Compal Secret Data		
Issued Date	2014/11/10	Deciphered Date	2015/11/25

THIS SHEET OF ENGINEERING DRAWING IS THE PROPRIETARY PROPERTY OF COMPAL ELECTRONICS, INC. AND CONTAINS CONFIDENTIAL AND TRADE SECRET INFORMATION. THIS SHEET MAY NOT BE TRANSFERED FROM THE CUSTODY OF THE COMPETENT DIVISION OF R&D DEPARTMENT EXCEPT AS AUTHORIZED BY COMPAL ELECTRONICS, INC. NEITHER THIS SHEET NOR THE INFORMATION IT CONTAINS MAY BE USED BY OR DISCLOSED TO ANY THIRD PARTY WITHOUT PRIOR WRITTEN CONSENT OF COMPAL ELECTRONICS, INC.

Compal Electronics, Inc.

Title: **P38-power SB**

Size | Document Number: **LA-E372P** | Rev: 0.2

Date: Sunday, July 17, 2016 | Sheet 37 of 47

Main Func = Thermal

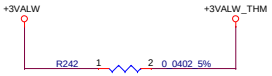

Thermal sensor

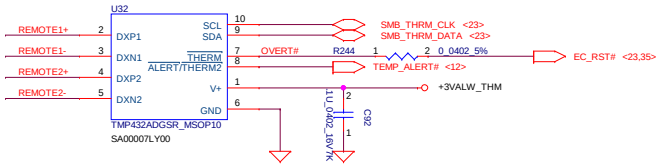

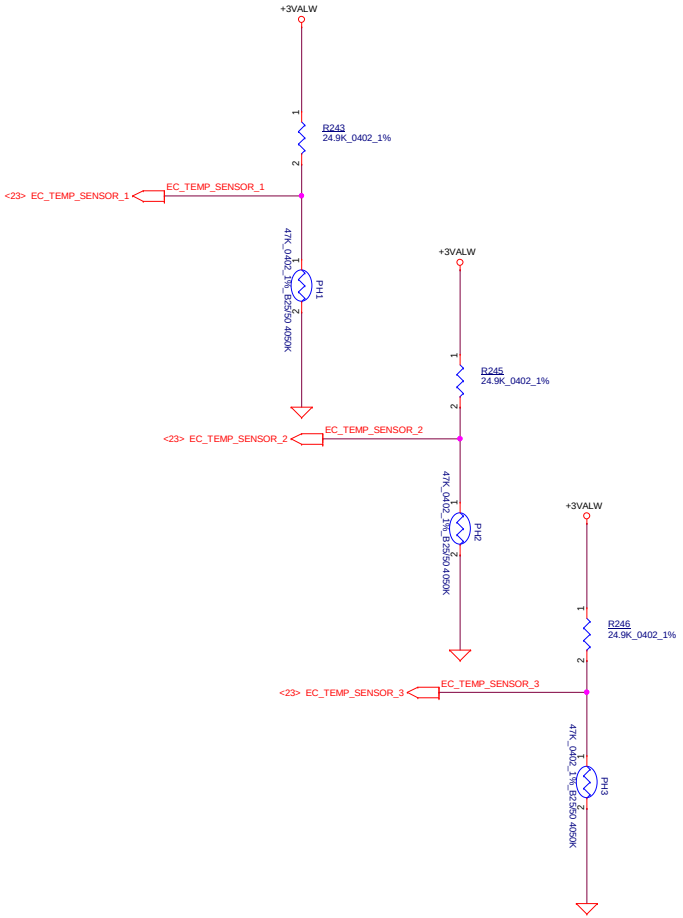

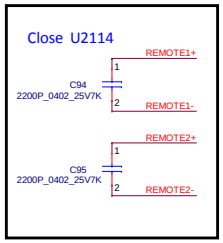

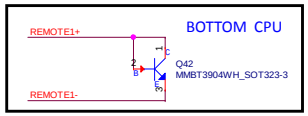

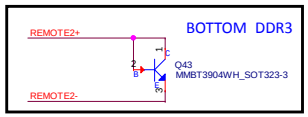

REMOTE1,2 (+/-) :
Trace width/space:10/10 mil
Trace length:<8"

Main Func = Screw Hole

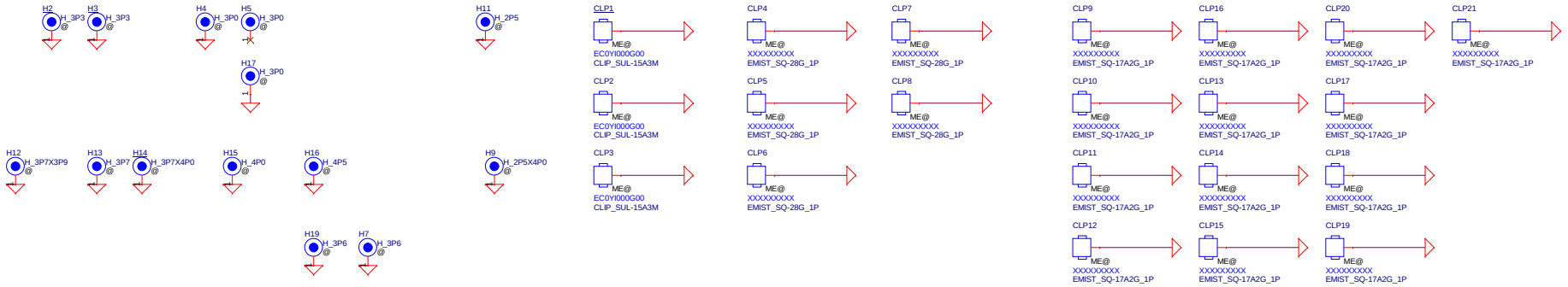

Vinafix.com

Security Classification	Compal Secret Data		
Issued Date	2014/11/10	Deciphered Date	2015/11/25

THIS SHEET OF ENGINEERING DRAWING IS THE PROPRIETARY PROPERTY OF COMPAL ELECTRONICS, INC. AND CONTAINS CONFIDENTIAL AND TRADE SECRET INFORMATION. THIS SHEET MAY NOT BE TRANSFERED FROM THE CUSTODY OF THE COMPETENT DIVISION OF R&D DEPARTMENT EXCEPT AS AUTHORIZED BY COMPAL ELECTRONICS, INC. NEITHER THIS SHEET NOR THE INFORMATION IT CONTAINS MAY BE USED BY OR DISCLOSED TO ANY THIRD PARTY WITHOUT PRIOR WRITTEN CONSENT OF COMPAL ELECTRONICS, INC.

Compal Electronics, Inc.

Title: P39-Thermal sensor

Size | Document Number: LA-E372P | Rev: 0.2

Date: Monday, August 01, 2016 | Sheet 38 of 47

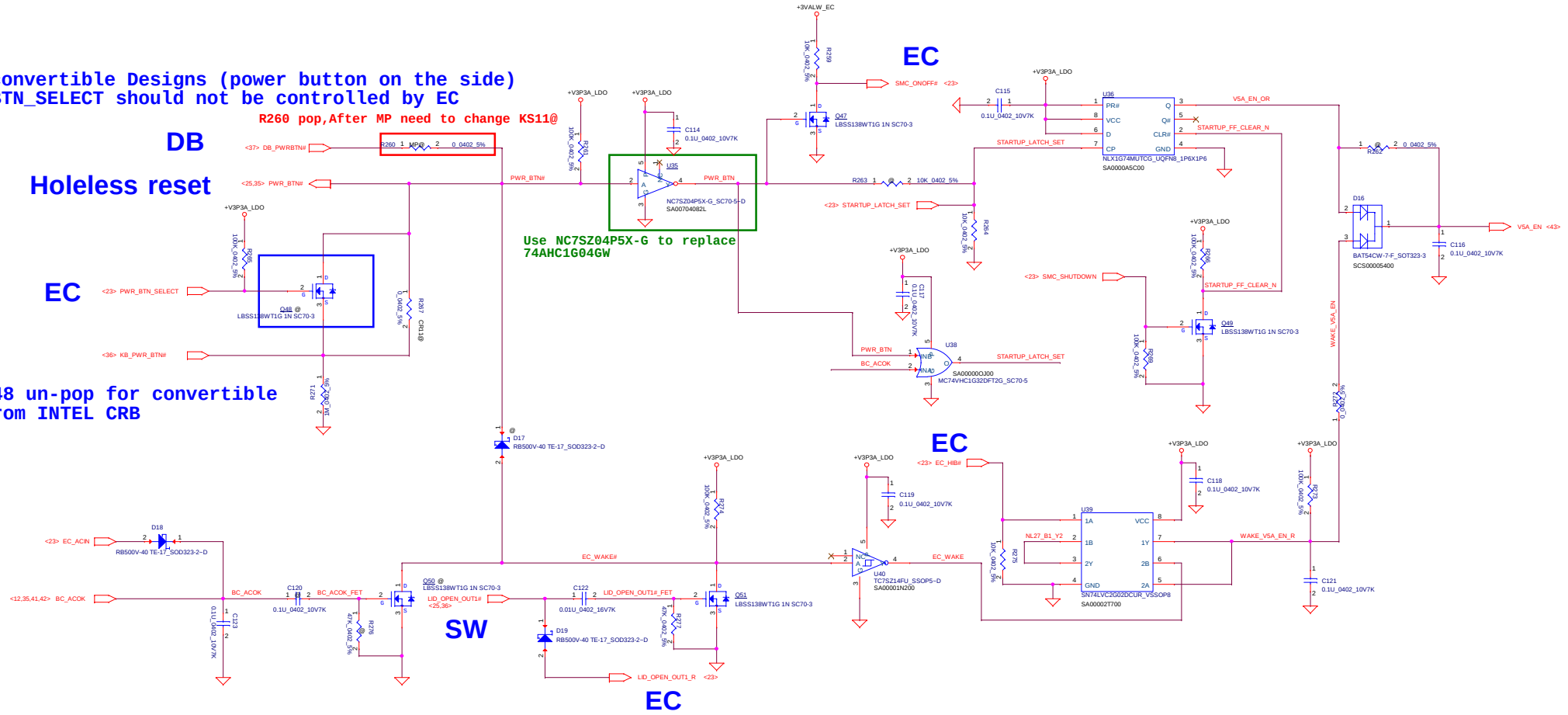

Vinafix.com

Security Classification	Compal Secret Data		
Issued Date	2014/11/10	Deciphered Date	2015/11/25

THIS SHEET OF ENGINEERING DRAWING IS THE PROPRIETARY PROPERTY OF COMPAL ELECTRONICS, INC. AND CONTAINS CONFIDENTIAL AND TRADE SECRET INFORMATION. THIS SHEET MAY NOT BE TRANSFERED FROM THE CUSTODY OF THE COMPETENT DIVISION OF R&D DEPARTMENT EXCEPT AS AUTHORIZED BY COMPAL ELECTRONICS, INC. NEITHER THIS SHEET NOR THE INFORMATION IT CONTAINS MAY BE USED BY OR DISCLOSED TO ANY THIRD PARTY WITHOUT PRIOR WRITTEN CONSENT OF COMPAL ELECTRONICS, INC.

Compal Electronics, Inc.

Title: P42-power sequence

Size: | Document Number: LA-E372P | Rev: 0.2

Date: Thursday, July 28, 2016 | Sheet 39 of 47

Main Func = DC Interface

VS Power Gate

+3VALW TO +3VS

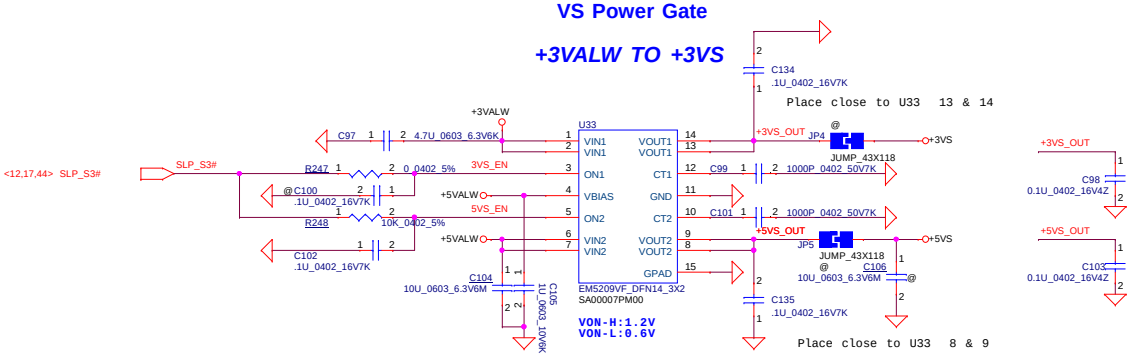

+5VALW to +5VS

RTC CIRCUIT

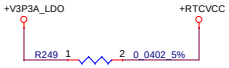

+VSDIO

Table 22-5.VSDIO Voltage Setting

SDMMC3_PWR_EN_B	SDMMC3_1P8_EN	VSDIO(V)
1	0	0
1	1	0
0	0	3.3
0	1	1.8

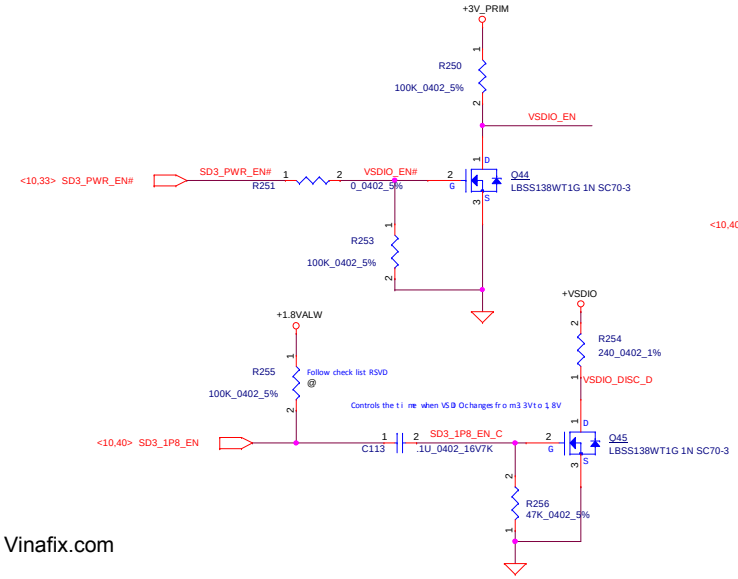

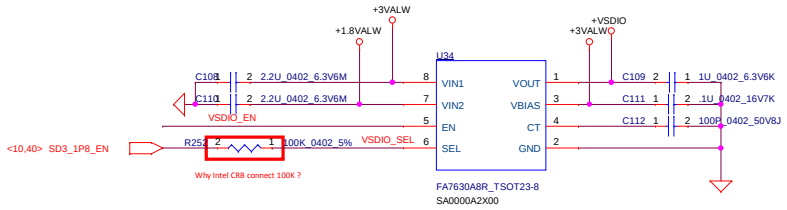

Vinafix.com

Security Classification	Compal Secret Data		
Issued Date	2014/11/10	Deciphered Date	2015/11/25

THIS SHEET OF ENGINEERING DRAWING IS THE PROPRIETARY PROPERTY OF COMPAL ELECTRONICS, INC. AND CONTAINS CONFIDENTIAL AND TRADE SECRET INFORMATION. THIS SHEET MAY NOT BE TRANSFERED FROM THE CUSTODY OF THE COMPETENT DIVISION OF R&D DEPARTMENT EXCEPT AS AUTHORIZED BY COMPAL ELECTRONICS, INC. NEITHER THIS SHEET NOR THE INFORMATION IT CONTAINS MAY BE USED BY OR DISCLOSED TO ANY THIRD PARTY WITHOUT PRIOR WRITTEN CONSENT OF COMPAL ELECTRONICS, INC.

Compal Electronics, Inc.

Title: **P40-DC Interface**

Size | Document Number: **LA-E372P** | Rev: 0.2

Date: Sunday, July 17, 2016 | Sheet 40 of 47

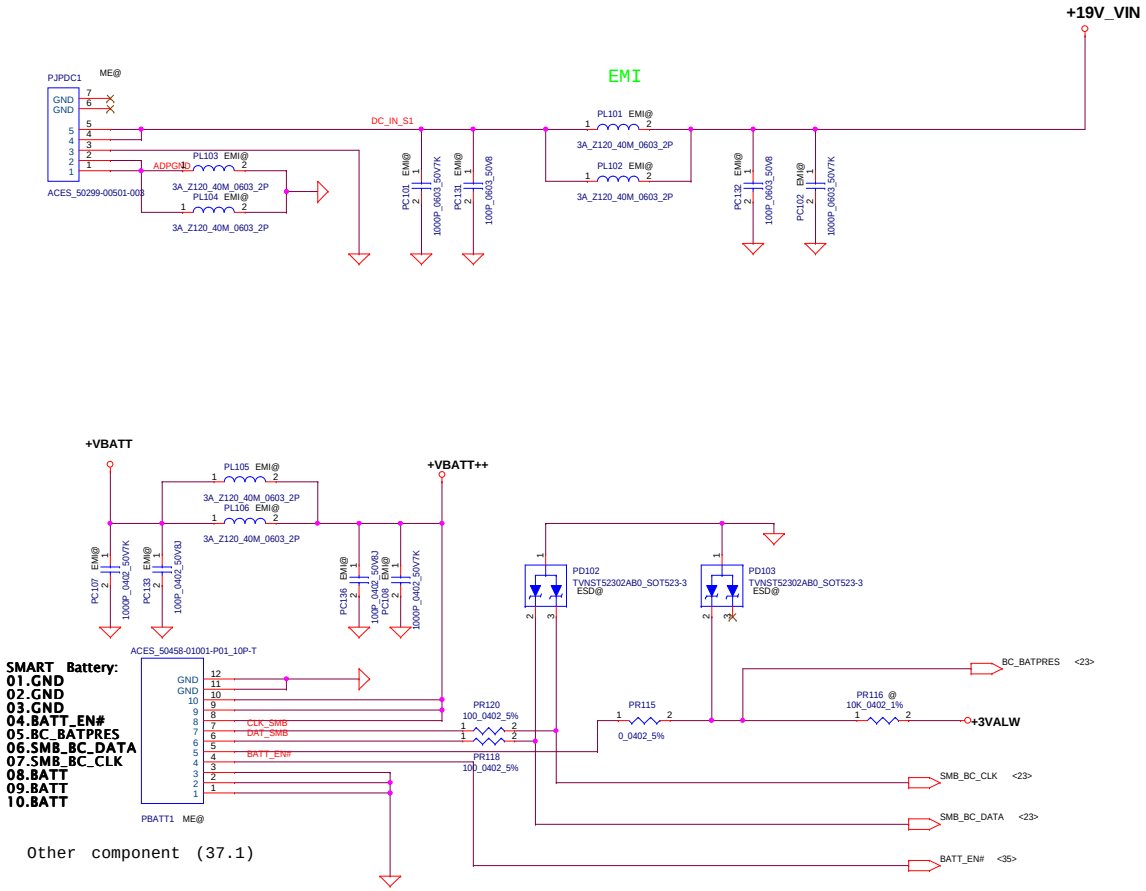

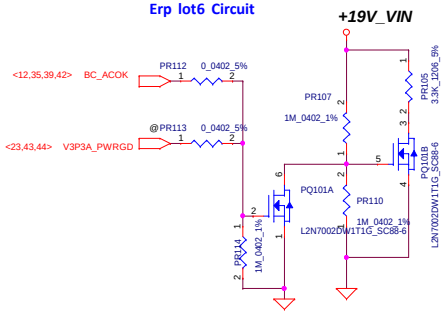

Vinafix.com

Title	<Title>	
Size C	Document Number <Doc>	Rev <RevCode>
Date: Wednesday, July 27, 2016	Sheet 41 of 46	

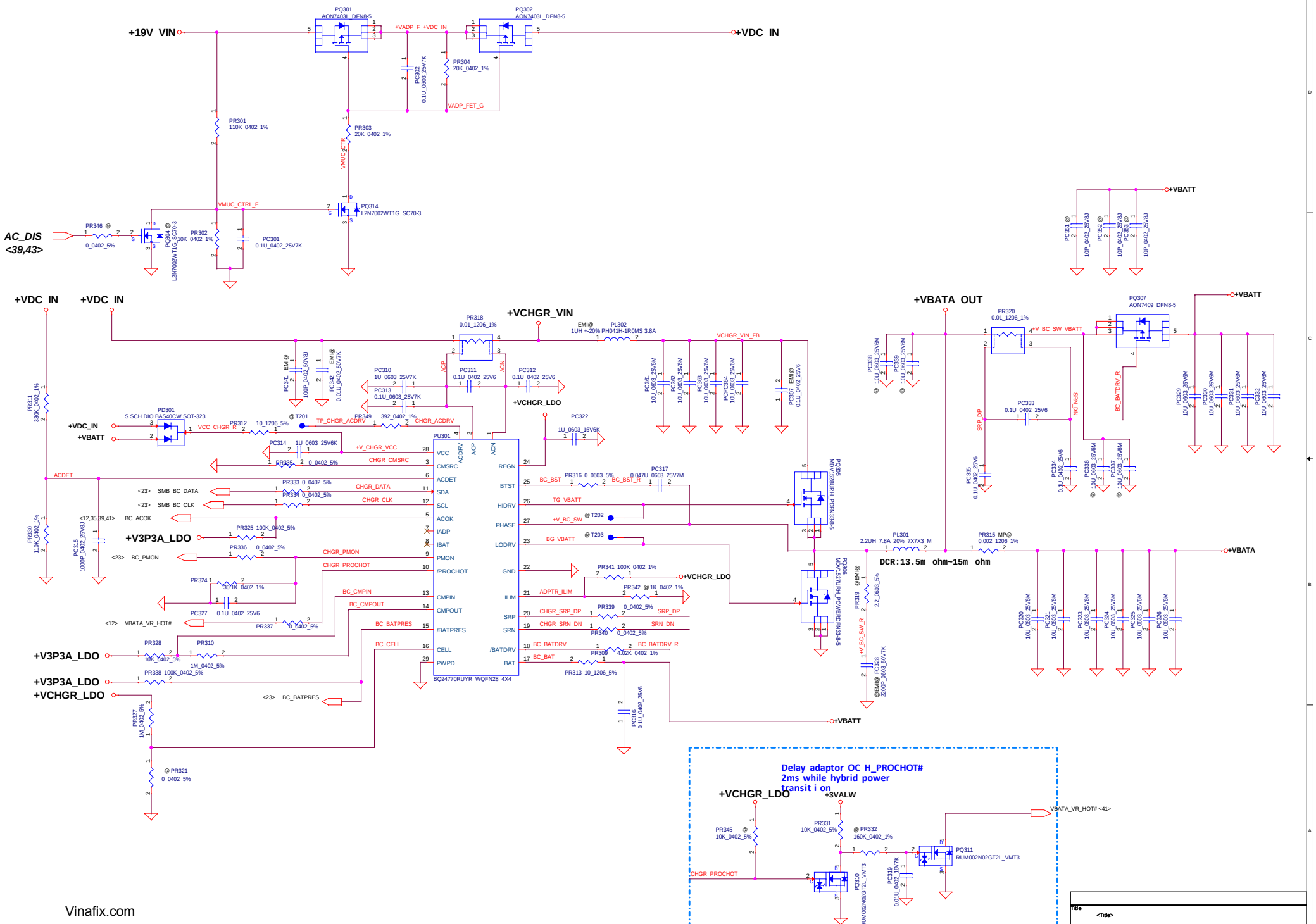
+19V_VIN
PQ301 AON7403L_DFN8-5
PQ302 AON7403L_DFN8-5
+VADP_F_+VDC_IN
+VDC_IN
PC302 0.1U_0603_25V7K
PR304 20K_0402_1%
VADP_FET_G
PR301 110K_0402_1%
PR303 20K_0402_1%
VMUC_CTRL
VMUC_CTRL_F
PQ314 L2N7002WT1G_SC70-3
AC_DIS
<39,43>
PR346 @ 0_0402_5%
PQ304 @ L2N7002WT1G_SC70-3
PR302 10K_0402_1%
PC301 0.1U_0402_25V7K
+VBATT
PC351 @ 10P_0402_25V8J
PC352 @ 10P_0402_25V8J
PC353 @ 10P_0402_25V8J
+VDC_IN
+VDC_IN
+VCHGR_VIN
PR318 0.01_1206_1%
EMI@ 1UH +-20% PH041H-1R0MS 3.8A
PL302
VCHGR_VIN_FB
PC341 EMI@ 100P_0402_50V8J
PC342 EMI@ 0.01U_0402_50V7K
PC310 1U_0603_25V7K
PC311 0.1U_0402_25V6
PC312 0.1U_0402_25V6
PC313 0.1U_0603_25V7K
ACP
ACN
+VCHGR_LDO
PC361 10U_0603_25V6M
PC362 10U_0603_25V6M
PC363 10U_0603_25V6M
PCPC364 10U_0603_25V6M
PC307 EMI@ 0.1U_0402_25V6
PC322 1U_0603_16V6K
PR311 330K_0402_1%
PD301 S SCH DIO BAS40CW SOT-323
+VDC_IN
+VBATT
PR312 10_1206_5%
VCC_CHGR_R
@ T201
TP_CHGR_ACDRV
PR349 392_0402_1%
CHGR_ACDRV
PC314 1U_0603_25V6K
+V_CHGR_VCC
PR335 0_0402_5%
CHGR_CMSRC
ACDET
PR330 110K_0402_1%
PC315 1000P_0402_25V8J
<23> SMB_BC_DATA
<23> SMB_BC_CLK
<12,35,39,41> BC_ACOK
+V3P3A_LDO
<23> BC_PMON
PR333 0_0402_5%
PR334 0_0402_5%
CHGR_DATA
CHGR_CLK
PR325 100K_0402_5%
PR336 0_0402_5%
CHGR_PMON
CHGR_PROCHOT
PR324 30.1K_0402_1%
PC327 0.1U_0402_25V6
PR337 0_0402_5%
<12> VBATA_VR_HOT#
BC_CMPIN
BC_CMPOUT
BC_BATPRES
BC_CELL
PR328 10K_0402_5%
PR310 1M_0402_5%
PR338 100K_0402_5%
+V3P3A_LDO
+VCHGR_LDO
PR327 1M_0402_5%
@ PR321 0_0402_5%
<23> BC_BATPRES
PU301
PU301 BQ24770RUYR_WQFN28_4X4
VCC
CMSRC
ACDET
SDA
SCL
ACOK
IADP
IBAT
PMON
/PROCHOT
CMPIN
CMPOUT
/BATPRES
CELL
PWPD
ACDRV
REGN
BTST
HIDRV
PHASE
LODRV
GND
ILIM
SRP
SRN
/BATDRV
BAT
BC_BST
BC_BST_R
PC317 0.047U_0603_25V7M
TG_VBATT
+V_BC_SW
BG_VBATT
@ T202
@ T203
PQ305 MVU252RUH PDFN33-8-5
PQ306 MVU252LUH PDFN33-8-5
PR341 100K_0402_1%
PR342 @ 1K_0402_1%
ADPTR_ILIM
PR339 0_0402_5%
PR340 0_0402_5%
CHGR_SRP_DP
CHGR_SRN_DN
SRP_DP
SRN_DN
BC_BATDRV
BC_BATDRV_R
PR309 4.02K_0402_1%
BC_BAT
PR313 10_1206_5%
PC316 0.1U_0402_25V6
+VBATT
+VBATA_OUT
PR320 0.01_1206_1%
+V_BC_SW_VBATT
PQ307 AON7409_DFN8-5
PC338 10U_0603_25V6M
PC339 10U_0603_25V6M
PC333 0.1U_0402_25V6
SRP_DP
NOT N/S
BC_BATDRV_R
PC335 0.1U_0402_25V6
PC334 0.1U_0402_25V6
PC336 10U_0603_25V6M
PC337 10U_0603_25V6M
PC329 10U_0603_25V6M
PC330 10U_0603_25V6M
PC331 10U_0603_25V6M
PC332 10U_0603_25V6M
PL301 2.2UH_7.8A_20%_7X7X3_M
DCR:13.5m ohm~15m ohm
PR315 MP@ 0.002_1206_1%
+VBATA
PR319 @EMI@ 2.2_0603_5%
+V_BC_SW_R
@EMI@ PC328 2200P_0603_50V7K
PC320 10U_0603_25V6M
PC321 10U_0603_25V6M
PC323 10U_0603_25V6M
PC324 10U_0603_25V6M
PC325 10U_0603_25V6M
PC326 10U_0603_25V6M
Delay adaptor OC H_PROCHOT#
2ms while hybrid power
transit i on
+VCHGR_LDO
+3VALW
PR345 @ 10K_0402_5%
PR331 10K_0402_5%
@ PR332 160K_0402_1%
PQ311 RUM002N02GT2L_VMT3
PQ310 RUM002N02GT2L_VMT3
PC319 0.01U_0402_16V7K
CHGR_PROCHOT
VBATA_VR_HOT# <41>
Vinafix.com
Title
<Title>
Size C
Document Number
<Doc>
Rev
<RevCode>
Date: Wednesday, July 27, 2016
Sheet 42 of 46

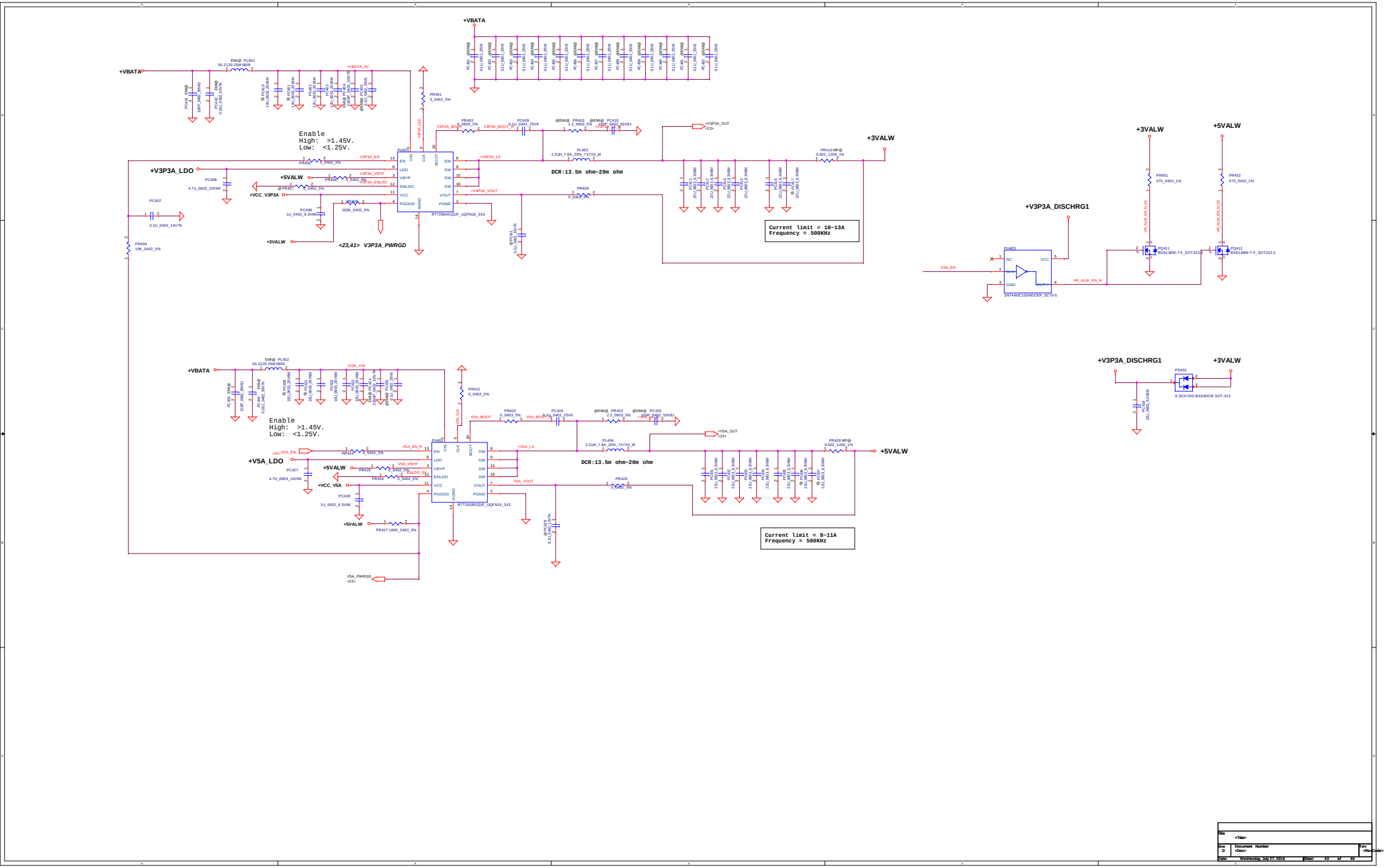
+VBATA
+VBATA
Enable
High: >1.45V.
Low: <1.25V.
+V3P3A_LDO
+5VALW
+VCC_V3P3A
+3VALW
<23,41> V3P3A_PWRGD
DCR:13.5m ohm~20m ohm
Current limit = 10~13A
Frequency = 500KHz
+3VALW
+3VALW
+5VALW
+V3P3A_DISCHRG1
+V3P3A_DISCHRG1
+3VALW
+VBATA
Enable
High: >1.45V.
Low: <1.25V.
+V5A_LDO
+5VALW
+VCC_V5A
+5VALW
DCR:13.5m ohm~20m ohm
Current limit = 8~11A
Frequency = 500KHz
+5VALW
Title
<Title>
Size
D
Document Number
<Doc>
Rev
<RevCode>
Date: Wednesday, July 27, 2016
Sheet 43 of 46

Vinafix.com

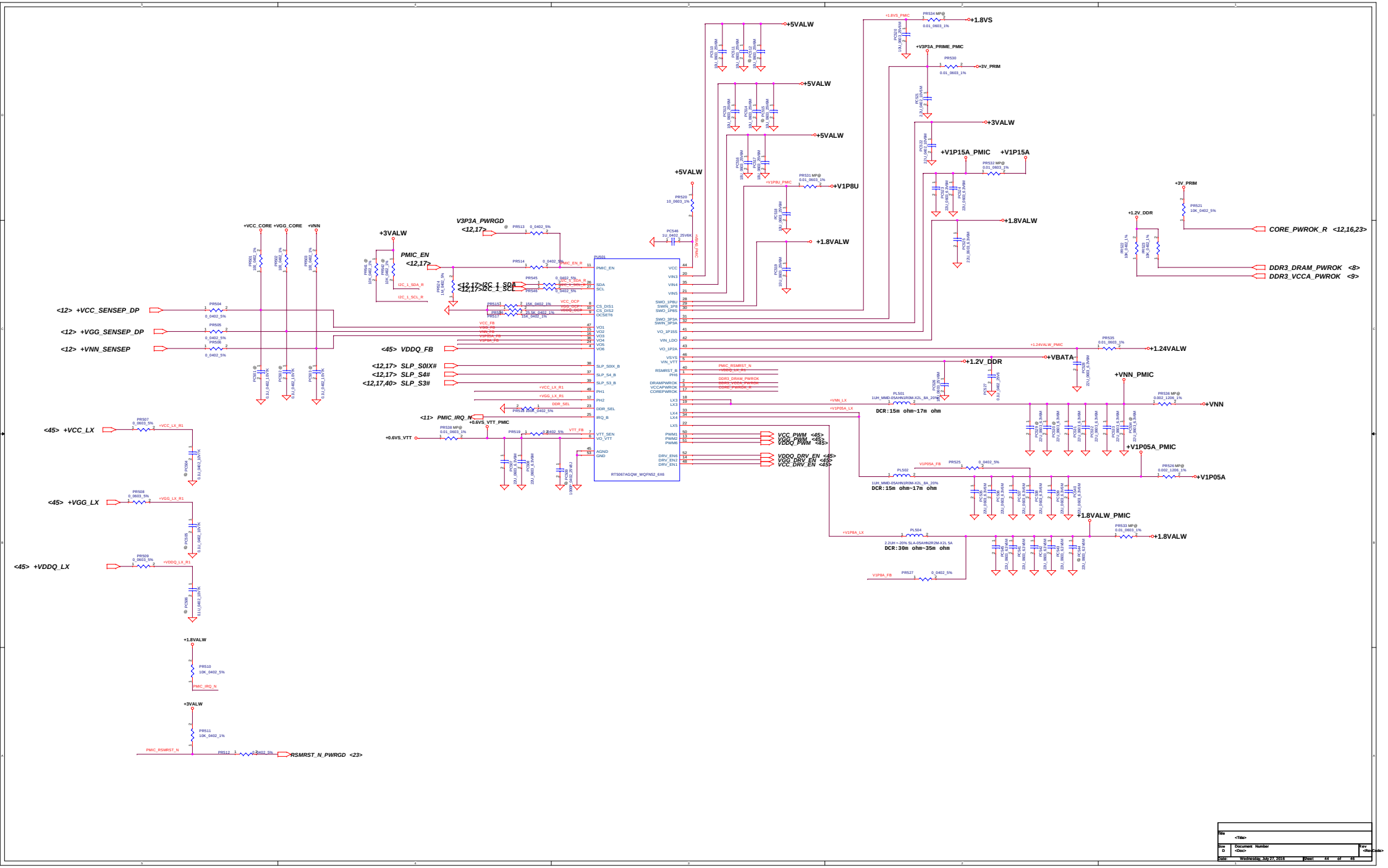
+VCC_CORE
+VGG_CORE
+VNN
V3P3A_PWRGD
<12,17>
+3VALW
PMIC_EN
<12,17>
<12,17>I2C_1_SDA
<12,17>I2C_1_SCL
<12> +VCC_SENSEP_DP
<12> +VGG_SENSEP_DP
<12> +VNN_SENSEP
<45> VDDQ_FB
<12,17> SLP_S0IX#
<12,17> SLP_S4#
<12,17,40> SLP_S3#
<11> PMIC_IRQ_N
+0.6VS_VTT_PMIC
+0.6VS_VTT
+5VALW
+V1P8U
+1.8VALW
+1.8VS
+V3P3A_PRIME_PMIC
+3V_PRIM
+V1P15A_PMIC
+V1P15A
+1.2V_DDR
+1.24VALW
+VBATA
+VNN_PMIC
+VNN
+V1P05A_PMIC
+V1P05A
+1.8VALW_PMIC
CORE_PWROK_R <12,16,23>
DDR3_DRAM_PWROK <8>
DDR3_VCCA_PWROK <9>
<45> +VCC_LX
<45> +VGG_LX
<45> +VDDQ_LX
RSMRST_N_PWRGD <23>
RT5067AGQW_WQFN52_6X8
VCC_PWM <45>
VGG_PWM <45>
VDDQ_PWM <45>
VDDQ_DRV_EN <45>
VGG_DRV_EN <45>
VCC_DRV_EN <45>
DCR:15m ohm~17m ohm
DCR:30m ohm~35m ohm
Vinafix.com

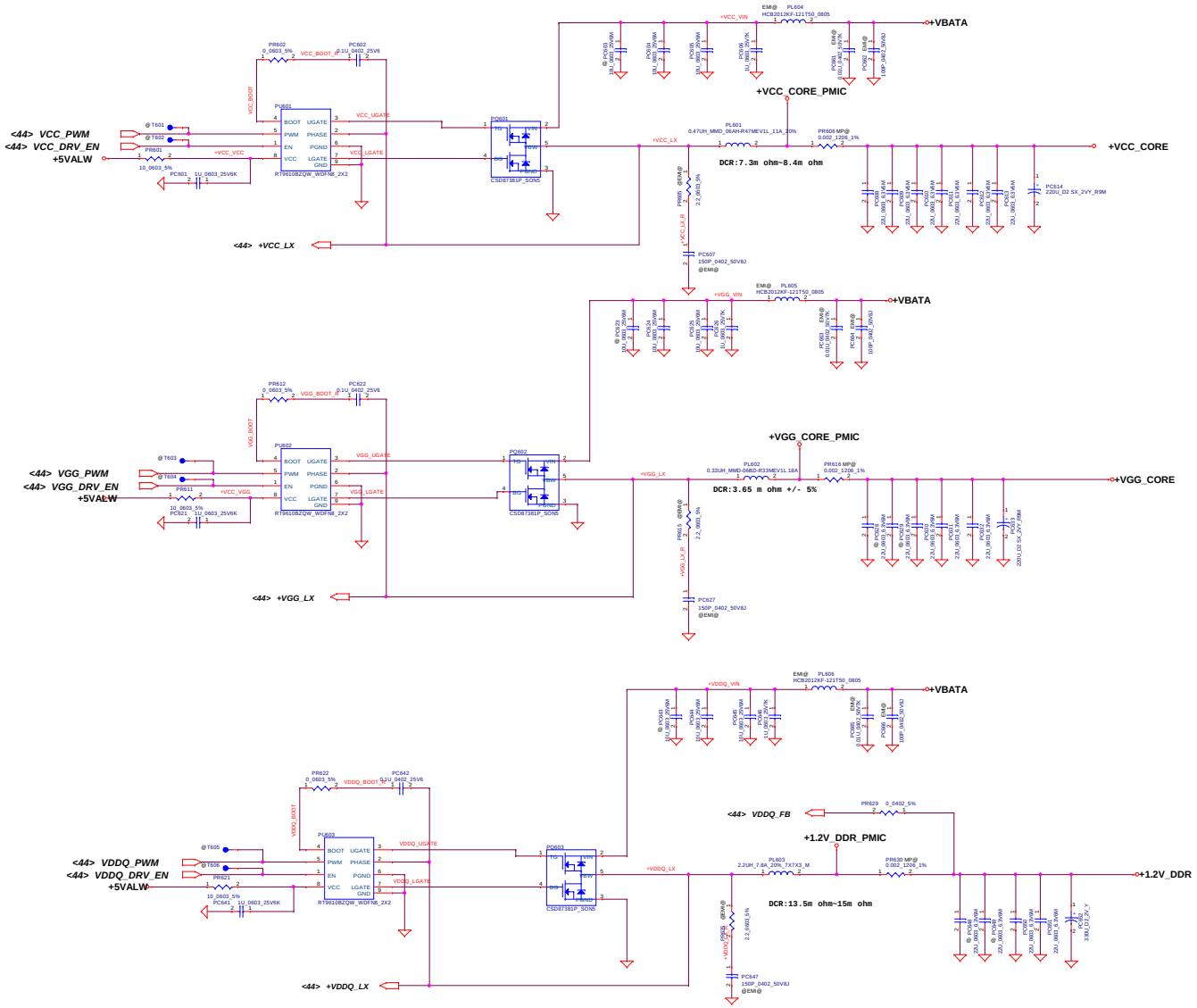
+VCC_CORE_PMIC
+VBATA
<44> VCC_PWM
<44> VCC_DRV_EN
+5VALW
+VCC_CORE
DCR:7.3m ohm~8.4m ohm
<44> +VCC_LX
+VGG_CORE_PMIC
<44> VGG_PWM
<44> VGG_DRV_EN
+5VALW
+VGG_CORE
DCR:3.65 m ohm +/- 5%
<44> +VGG_LX
+VDDQ_VIN
<44> VDDQ_FB
+1.2V_DDR_PMIC
<44> VDDQ_PWM
<44> VDDQ_DRV_EN
+5VALW
+1.2V_DDR
DCR:13.5m ohm~15m ohm
<44> +VDDQ_LX

Vinafix.com

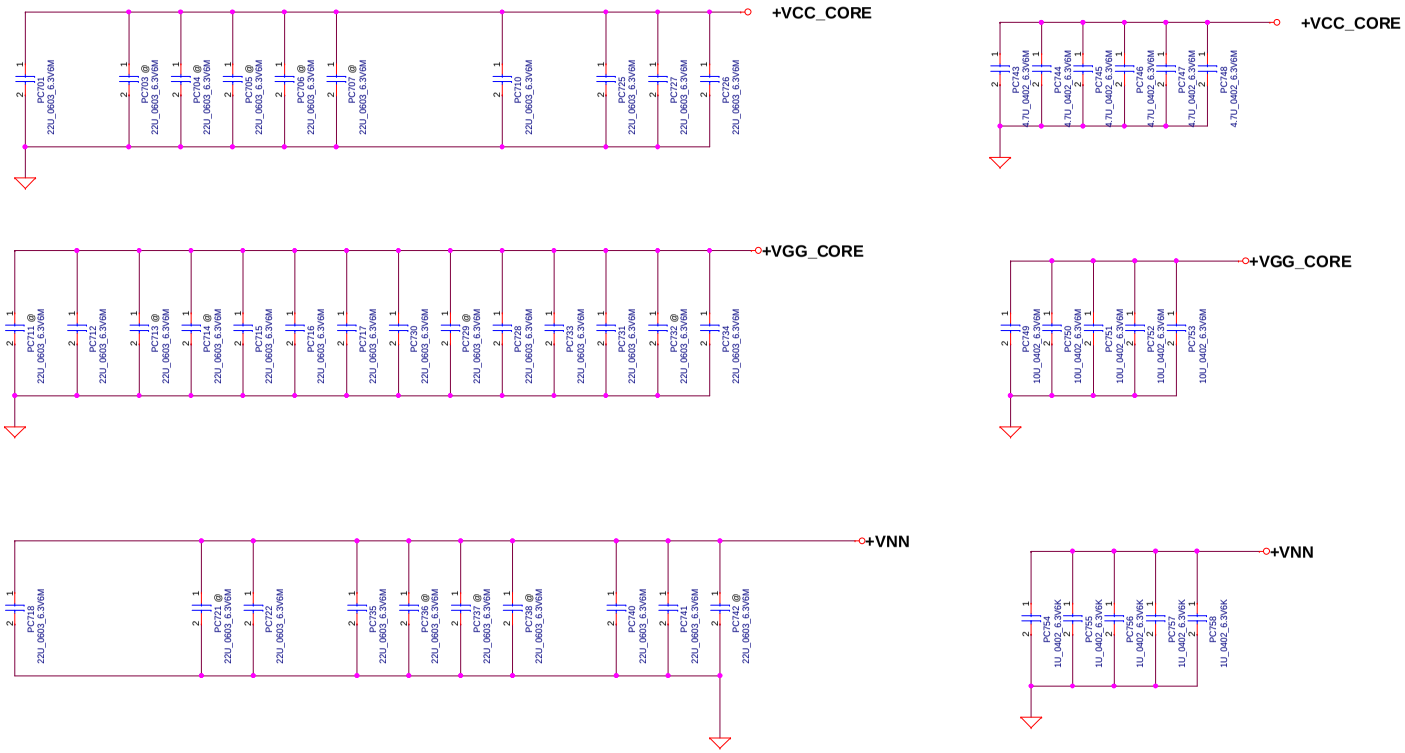

Vmafix.com

Title	<Title>	
Size C	Document Number <Doc>	Rev <RevCode>
Date: Wednesday, July 27, 2016	Sheet 46 of 46	

Version Change List (P. I. R. List)

Item	Page#	Title	Date	Request Owner	Issue Description	Solution Description	Rev.
1	P41	PWR	20160712	COMPAL	lid no function issue	chage PR113 to @	
2		PWR		COMPAL			
3		PWR		COMPAL			
4		PWR		COMPAL			
5		PWR		COMPAL			
6		PWR		COMPAL			
7		PWR					
8							
9							
10							
11							
12							
13							
14							
15							

DELL CONFIDENTIAL/PROPRIETARY

Vinafix.com

Security Classification	Compal Secret Data		
Issued Date	2015/07/15	Deciphered Date	2016/07/31

THIS SHEET OF ENGINEERING DRAWING IS THE PROPRIETARY PROPERTY OF COMPAL ELECTRONICS, INC. AND CONTAINS CONFIDENTIAL AND TRADE SECRET INFORMATION. THIS SHEET MAY NOT BE TRANSFERED FROM THE CUSTODY OF THE COMPETENT DIVISION OF R&D DEPARTMENT EXCEPT AS AUTHORIZED BY COMPAL ELECTRONICS, INC. NEITHER THIS SHEET NOR THE INFORMATION IT CONTAINS MAY BE USED BY OR DISCLOSED TO ANY THIRD PARTY WITHOUT PRIOR WRITTEN CONSENT OF COMPAL ELECTRONICS, INC.

Compal Electronics, Inc.

Title: PWR_Change list

Size | Document Number | Rev

Date: Wednesday, July 27, 2016 | Sheet 47 of 47