TABLE OF CONTENTS

SHEET NO.	SHEET NAME
1	TABLE OF CONTENTS
2	SYSTEM BLOCK DIAGRAM
3	USB TYPE-C BLOCK DIAGRAM
4	POWER TREE
5	I2C MAP
6	FT4 MEMORY/PCIE
7	FT4 eDP/CLK/SVI2/JTAG/MISC
8	FT4 SATA/USB/SPI/XTAL
9	FT4 GEVENT/GPIO/SD/AZ
10	FT4 PWR
11	FT4 PPVAR DECOUPLING/GND
12	DDR4 CH00/01
13	DDR4 CH00/11
14	SPI ROM, H1
15	SERVO DEBUG
16	eMMC/SD
17	AUDIO
18	BASE: KB, TP, NFC, FP, PEN
19	LID: eDP, CAM, TOUCH, SENSOR
20	SENSOR: GYRO, LID, LED
21	WIFI
22	EC-NPCX7
23	USB C0
24	USB A CONNECTORS
25	USB3 HUB
26	POWER - BATTERY CHARGER
27	POWER - FT4 CORE
28	POWER - FT4 CORE SWITCHES
29	POWER - DDR4
30	POWER - 1.8V, 3.3V, 5V

TABLE OF CONTENTS

SHEET NO.	SHEET NAME
31	POWER - 0.95V, 1.2V, 1.8V, 2.5V
32	POWER - LOAD SWITCHES
33	INAs
34	SUB BOARD CONNECTORS
35	DNS FEATURE LIST
36	SCHEMATIC CHANGES

Quanta Computer Inc.

PROJECT : GRUNT

Size	Document Number	Rev
	TABLE OF CONTENTS	2A

Date: Wednesday, November 14, 2018 Sheet 1 of 35

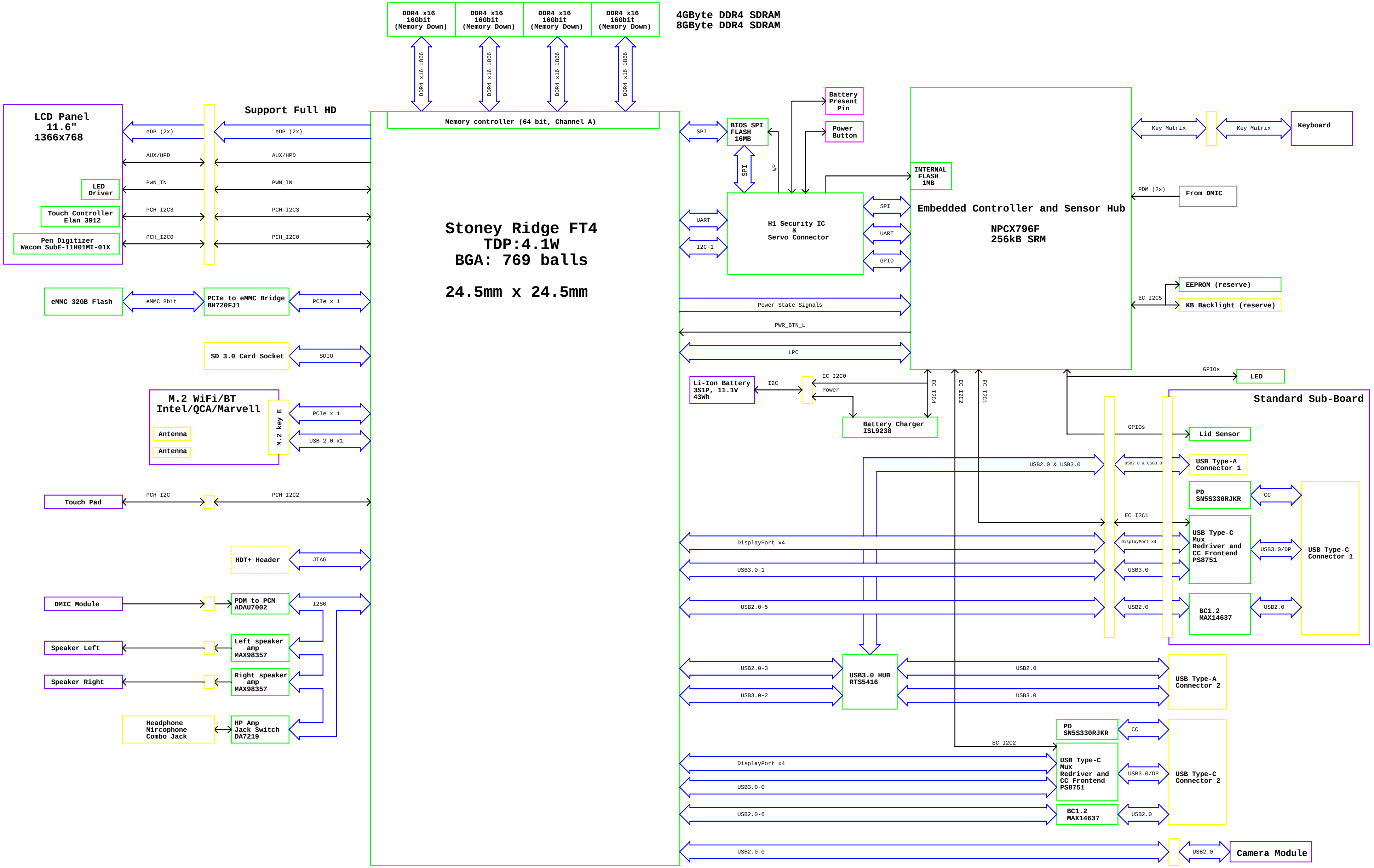
DDR4 x16 16Gbit (Memory Down)
DDR4 x16 16Gbit (Memory Down)
DDR4 x16 16Gbit (Memory Down)
DDR4 x16 16Gbit (Memory Down)
4GByte DDR4 SDRAM
8GByte DDR4 SDRAM
DDR4 x16 1866
DDR4 x16 1866
DDR4 x16 1866
DDR4 x16 1866
Memory controller (64 bit, Channel A)
LCD Panel
11.6"
1366x768
LED Driver
Touch Controller Elan 3912
Pen Digitizer Wacom SubE-11H01MI-01X
Support Full HD
eDP (2x)
eDP (2x)
AUX/HPD
AUX/HPD
PWN_IN
PWN_IN
PCH_I2C3
PCH_I2C3
PCH_I2C0
PCH_I2C0
Stoney Ridge FT4
TDP:4.1W
BGA: 769 balls
24.5mm x 24.5mm
eMMC 32GB Flash
eMMC 8bit
PCIe to eMMC Bridge BH720FJ1
PCIe x 1
SD 3.0 Card Socket
SDIO
M.2 WiFi/BT
Intel/QCA/Marvell
Antenna
Antenna
M.2 key E
PCIe x 1
USB 2.0 x1
Touch Pad
PCH_I2C
PCH_I2C2
HDT+ Header
JTAG
DMIC Module
PDM to PCM ADAU7002
I2S0
Speaker Left
Left speaker amp MAX98357
Speaker Right
Right speaker amp MAX98357
Headphone Mircophone Combo Jack
HP Amp Jack Switch DA7219
SPI
BIOS SPI FLASH 16MB
SPI
WP
Battery Present Pin
Power Button
UART
I2C-1
H1 Security IC & Servo Connector
SPI
UART
GPIO
INTERNAL FLASH 1MB
Embedded Controller and Sensor Hub
NPCX796F
256kB SRM
Key Matrix
Key Matrix
Keyboard
PDM (2x)
From DMIC
EC I2C5
EEPROM (reserve)
KB Backlight (reserve)
Power State Signals
PWR_BTN_L
LPC
Li-Ion Battery 3S1P, 11.1V 43Wh
I2C
EC I2C0
Power
Battery Charger ISL9238
EC I2C4
EC I2C2
EC I2C1
GPIOs
LED
Standard Sub-Board
GPIOs
Lid Sensor
USB2.0 & USB3.0
USB2.0 & USB3.0
USB Type-A Connector 1
PD SN5S330RJKR
CC
EC I2C1
DisplayPort x4
DisplayPort x4
USB Type-C Mux Redriver and CC Frontend PS8751
USB3.0/DP
USB Type-C Connector 1
USB3.0-1
USB3.0
USB2.0-5
USB2.0
BC1.2 MAX14637
USB2.0
USB2.0-3
USB3.0 HUB RTS5416
USB2.0
USB3.0-2
USB3.0
USB Type-A Connector 2
PD SN5S330RJKR
CC
EC I2C2
DisplayPort x4
USB Type-C Mux Redriver and CC Frontend PS8751
USB3.0/DP
USB Type-C Connector 2
USB3.0-0
USB2.0-6
BC1.2 MAX14637
USB2.0
USB2.0-0
USB2.0
Camera Module

Quanta Computer Inc.
PROJECT :GRUNT

Size	Document Number	Rev
	SYSTEM Block Diagram	2A

Date: Wednesday, November 14, 2018 Sheet 2 of 35

Grunt USB Block Diagram

Accurate: 2017/10/11

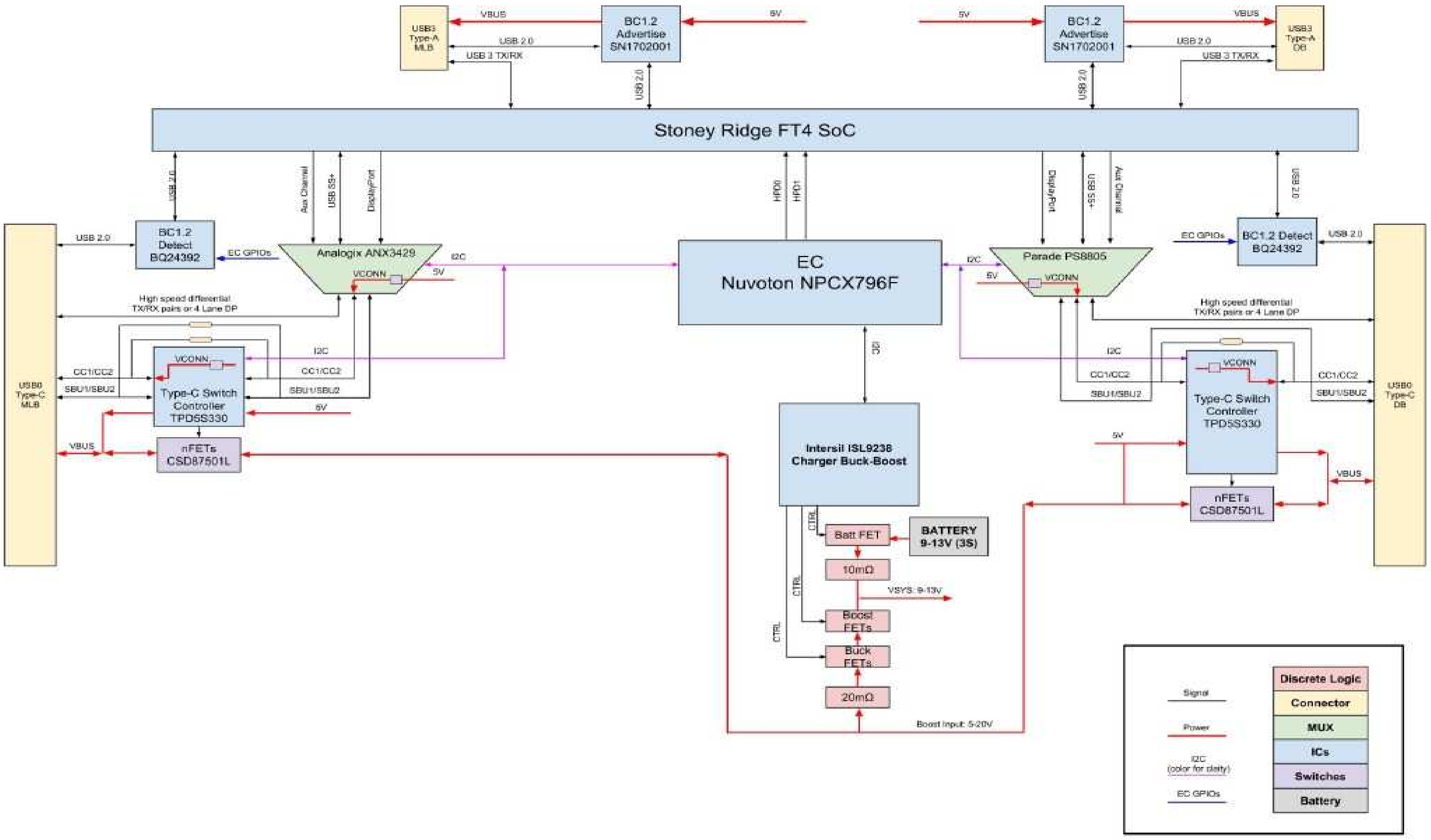
USB3 Type-A MLB
VBUS
USB 2.0
USB 3 TX/RX
BC1.2 Advertise SN1702001
5V
USB 2.0
5V
BC1.2 Advertise SN1702001
VBUS
USB 2.0
USB 3 TX/RX
USB3 Type-A DB
USB 2.0
Stoney Ridge FT4 SoC
USB 2.0
Aux Channel
USB SS+
DisplayPort
HPD0
HPD1
DisplayPort
USB SS+
Aux Channel
USB 2.0
USB 2.0
BC1.2 Detect BQ24392
EC GPIOs
Analogix ANX3429
VCONN
I2C
5V
EC
Nuvoton NPCX796F
I2C
5V
Parade PS8805
VCONN
EC GPIOs
BC1.2 Detect BQ24392
USB 2.0
High speed differential TX/RX pairs or 4 Lane DP
High speed differential TX/RX pairs or 4 Lane DP
USB0 Type-C MLB
CC1/CC2
SBU1/SBU2
VCONN
Type-C Switch Controller TPD5S330
I2C
CC1/CC2
SBU1/SBU2
5V
VBUS
nFETs CSD87501L
I2C
I2C
CC1/CC2
SBU1/SBU2
VCONN
Type-C Switch Controller TPD5S330
CC1/CC2
SBU1/SBU2
USB0 Type-C DB
5V
VBUS
nFETs CSD87501L
Intersil ISL9238 Charger Buck-Boost
CTRL
CTRL
CTRL
Batt FET
BATTERY 9-13V (3S)
10mΩ
VSYS: 9-13V
Boost FETs
Buck FETs
20mΩ
Boost Input: 5-20V
Signal
Power
I2C (color for clarity)
EC GPIOs
Discrete Logic
Connector
MUX
ICs
Switches
Battery

Quanta Computer Inc.

PROJECT : GRUNT

Size	Document Number	Rev
	USB TYPE-C BLOCK DIAGRAM	2A

Date: Wednesday, November 14, 2018 Sheet 3 of 36

Grunt Power Tree

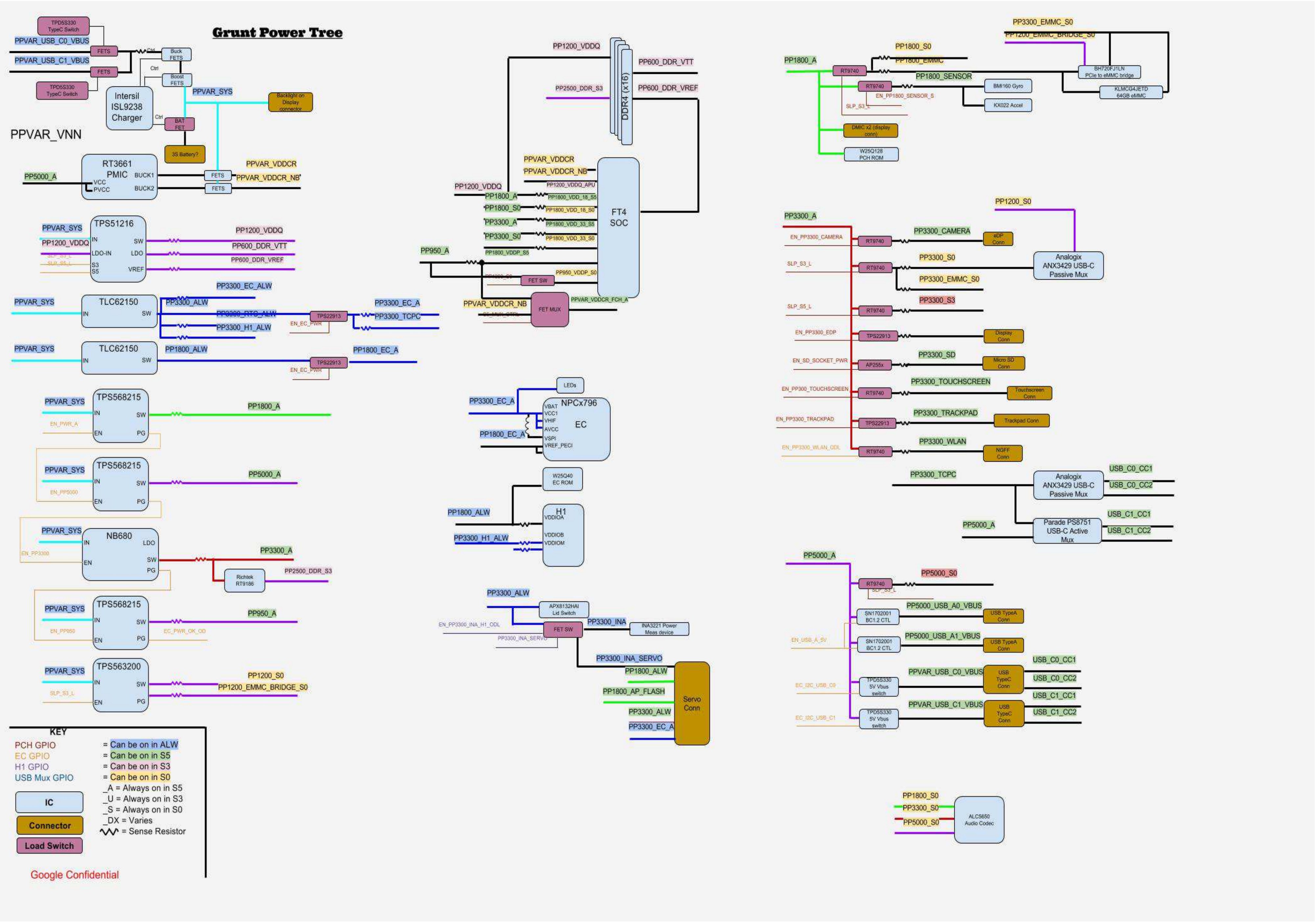
TPD5S330 TypeC Switch
PPVAR_USB_C0_VBUS
FETS
Ctrl
Buck FETS
PPVAR_USB_C1_VBUS
FETS
Ctrl
Boost FETS
TPD5S330 TypeC Switch
Intersil ISL9238 Charger
PPVAR_SYS
Backlight on Display connector
Ctrl
BAT FET
PPVAR_VNN
3S Battery?
RT3661 PMIC
PP5000_A
VCC
PVCC
BUCK1
BUCK2
FETS
FETS
PPVAR_VDDCR
PPVAR_VDDCR_NB
PPVAR_SYS
PP1200_VDDQ
TPS51216
IN
LDO-IN
SLP_S3_L
SLP_S5_L
S3
S5
SW
LDO
VREF
PP1200_VDDQ
PP600_DDR_VTT
PP600_DDR_VREF
PP3300_EC_ALW
PPVAR_SYS
TLC62150
IN
SW
PP3300_ALW
PP3300_RTC_ALW
PP3300_H1_ALW
TPS22913
EN_EC_PWR
PP3300_EC_A
PP3300_TCPC
PPVAR_SYS
TLC62150
IN
SW
PP1800_ALW
TPS22913
EN_EC_PWR
PP1800_EC_A
PPVAR_SYS
TPS568215
IN
EN_PWR_A
EN
SW
PG
PP1800_A
PPVAR_SYS
TPS568215
IN
EN_PP5000
EN
SW
PG
PP5000_A
PPVAR_SYS
NB680
IN
EN_PP3300
EN
LDO
SW
PG
PP3300_A
Richtek RT9186
PP2500_DDR_S3
PPVAR_SYS
TPS568215
IN
EN_PP950
EN
SW
PG
PP950_A
EC_PWR_OK_OD
PPVAR_SYS
TPS563200
IN
SLP_S3_L
EN
SW
PG
PP1200_S0
PP1200_EMMC_BRIDGE_S0
KEY
PCH GPIO
EC GPIO
H1 GPIO
USB Mux GPIO
IC
Connector
Load Switch
= Can be on in ALW
= Can be on in S5
= Can be on in S3
= Can be on in S0
_A = Always on in S5
_U = Always on in S3
_S = Always on in S0
_DX = Varies
= Sense Resistor
PP1200_VDDQ
PP600_DDR_VTT
PP2500_DDR_S3
DDR4 (x16)
PP600_DDR_VREF
PPVAR_VDDCR
PPVAR_VDDCR_NB
PP1200_VDDQ
PP1200_VDDQ_APU
PP1800_A
PP1800_VDD_18_S5
PP1800_S0
PP1800_VDD_18_S0
PP3300_A
PP1800_VDD_33_S5
PP3300_S0
PP1800_VDD_33_S0
PP1800_VDDP_S5
FT4 SOC
PP950_A
PP1800_S0
FET SW
PP950_VDDP_S0
PPVAR_VDDCR_NB
S5_MUX_CTRL
FET MUX
PPVAR_VDDCR_FCH_A
LEDs
PP3300_EC_A
NPCx796
EC
VBAT
VCC1
VHIF
AVCC
PP1800_EC_A
VSPI
VREF_PECI
W25Q40 EC ROM
PP1800_ALW
H1
VDDIOA
PP3300_H1_ALW
VDDIOB
VDDIOM
PP3300_ALW
APX8132HAI Lid Switch
EN_PP3300_INA_H1_ODL
FET SW
PP3300_INA
INA3221 Power Meas device
PP3300_INA_SERVO
PP3300_INA_SERVO
PP1800_ALW
PP1800_AP_FLASH
PP3300_ALW
PP3300_EC_A
Servo Conn
PP3300_EMMC_S0
PP1200_EMMC_BRIDGE_S0
PP1800_S0
PP1800_A
RT9740
PP1800_EMMC
BH720FJ1LN PCIe to eMMC bridge
PP1800_SENSOR
RT9740
BMI160 Gyro
KLMCG4JETD 64GB eMMC
EN_PP1800_SENSOR_S
SLP_S3_L
KX022 Accel
DMIC x2 (display conn)
W25Q128 PCH ROM
PP1200_S0
PP3300_A
EN_PP3300_CAMERA
RT9740
PP3300_CAMERA
eDP Conn
SLP_S3_L
RT9740
PP3300_S0
Analogix ANX3429 USB-C Passive Mux
PP3300_EMMC_S0
SLP_S5_L
RT9740
PP3300_S3
EN_PP3300_EDP
TPS22913
Display Conn
EN_SD_SOCKET_PWR
AP255x
PP3300_SD
Micro SD Conn
EN_PP300_TOUCHSCREEN
RT9740
PP3300_TOUCHSCREEN
Touchscreen Conn
EN_PP3300_TRACKPAD
TPS22913
PP3300_TRACKPAD
Trackpad Conn
EN_PP3300_WLAN_ODL
RT9740
PP3300_WLAN
NGFF Conn
PP3300_TCPC
Analogix ANX3429 USB-C Passive Mux
USB_C0_CC1
USB_C0_CC2
PP5000_A
Parade PS8751 USB-C Active Mux
USB_C1_CC1
USB_C1_CC2
PP5000_A
RT9740
PP5000_S0
SLP_S3_L
SN1702001 BC1.2 CTL
PP5000_USB_A0_VBUS
USB TypeA Conn
EN_USB_A_5V
SN1702001 BC1.2 CTL
PP5000_USB_A1_VBUS
USB TypeA Conn
EC_I2C_USB_C0
TPD5S330 5V Vbus switch
PPVAR_USB_C0_VBUS
USB TypeC Conn
USB_C0_CC1
USB_C0_CC2
EC_I2C_USB_C1
TPD5S330 5V Vbus switch
PPVAR_USB_C1_VBUS
USB TypeC Conn
USB_C1_CC1
USB_C1_CC2
PP1800_S0
PP3300_S0
PP5000_S0
ALC5650 Audio Codec

Google Confidential

Quanta Computer Inc.

PROJECT : GRUNT

Size	Document Number	Rev
	POWER TREE	2A

Date: Wednesday, November 14, 2018 Sheet 4 of 35

Grunt I2C Map

2017-10-12

LEGEND

I2C Master & Slave	I2C Master	I2C Slaves

I2C addresses given in 7-bit form

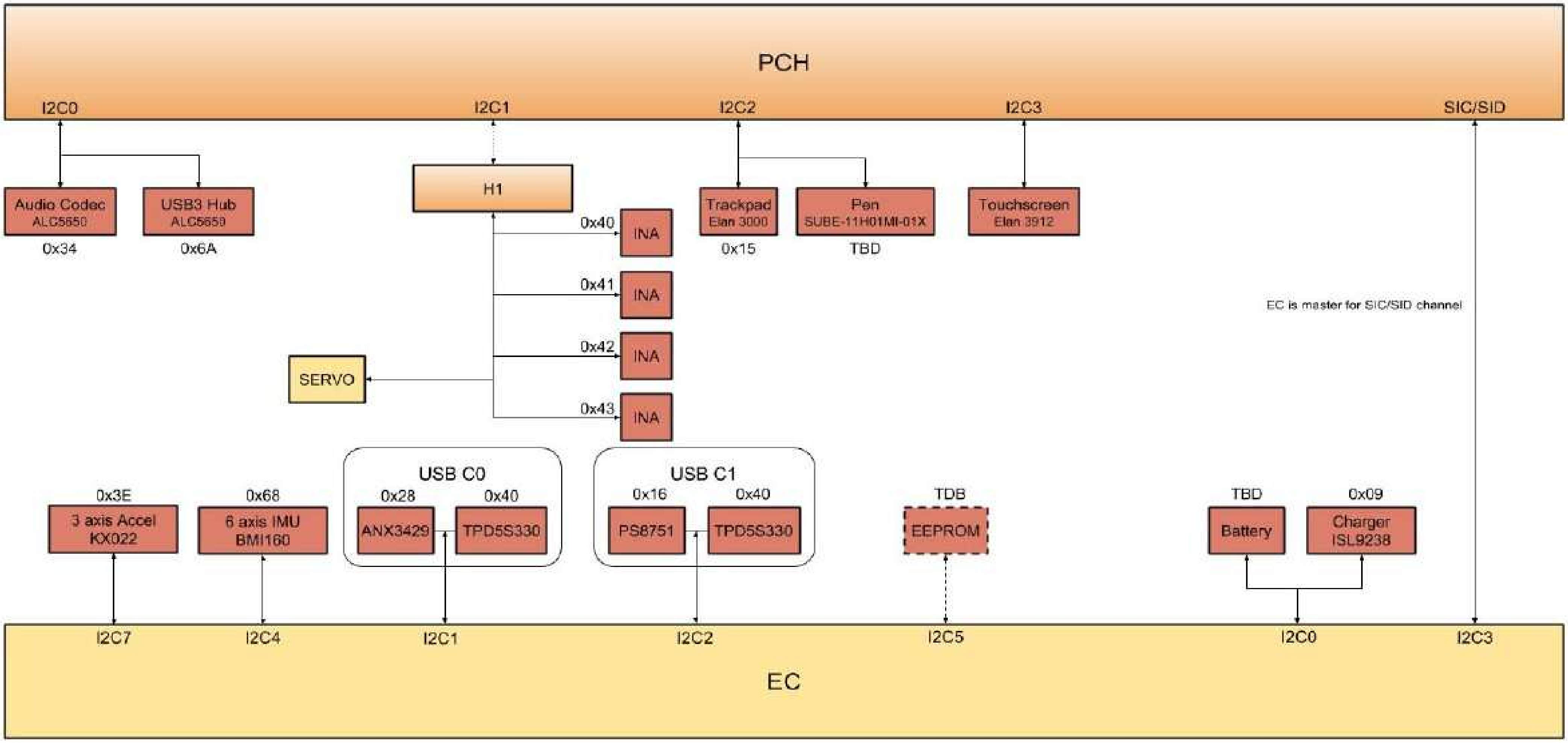
PCH
I2C0
I2C1
I2C2
I2C3
SIC/SID
Audio Codec
ALC5650
0x34
USB3 Hub
ALC5659
0x6A
H1
0x40
INA
0x41
INA
0x42
INA
0x43
INA
SERVO
Trackpad
Elan 3000
0x15
Pen
SUBE-11H01MI-01X
TBD
Touchscreen
Elan 3912
EC is master for SIC/SID channel
0x3E
3 axis Accel
KX022
0x68
6 axis IMU
BMI160
USB C0
0x28
ANX3429
0x40
TPD5S330
USB C1
0x16
PS8751
0x40
TPD5S330
TDB
EEPROM
TBD
Battery
0x09
Charger
ISL9238
I2C7
I2C4
I2C1
I2C2
I2C5
I2C0
I2C3
EC

Quanta Computer Inc.

PROJECT : GRUNT

Size	Document Number	Rev
	I2C MAP	2A

Date: Wednesday, November 14, 2018 Sheet 5 of 35

Grunt USB Map
2017-12-14

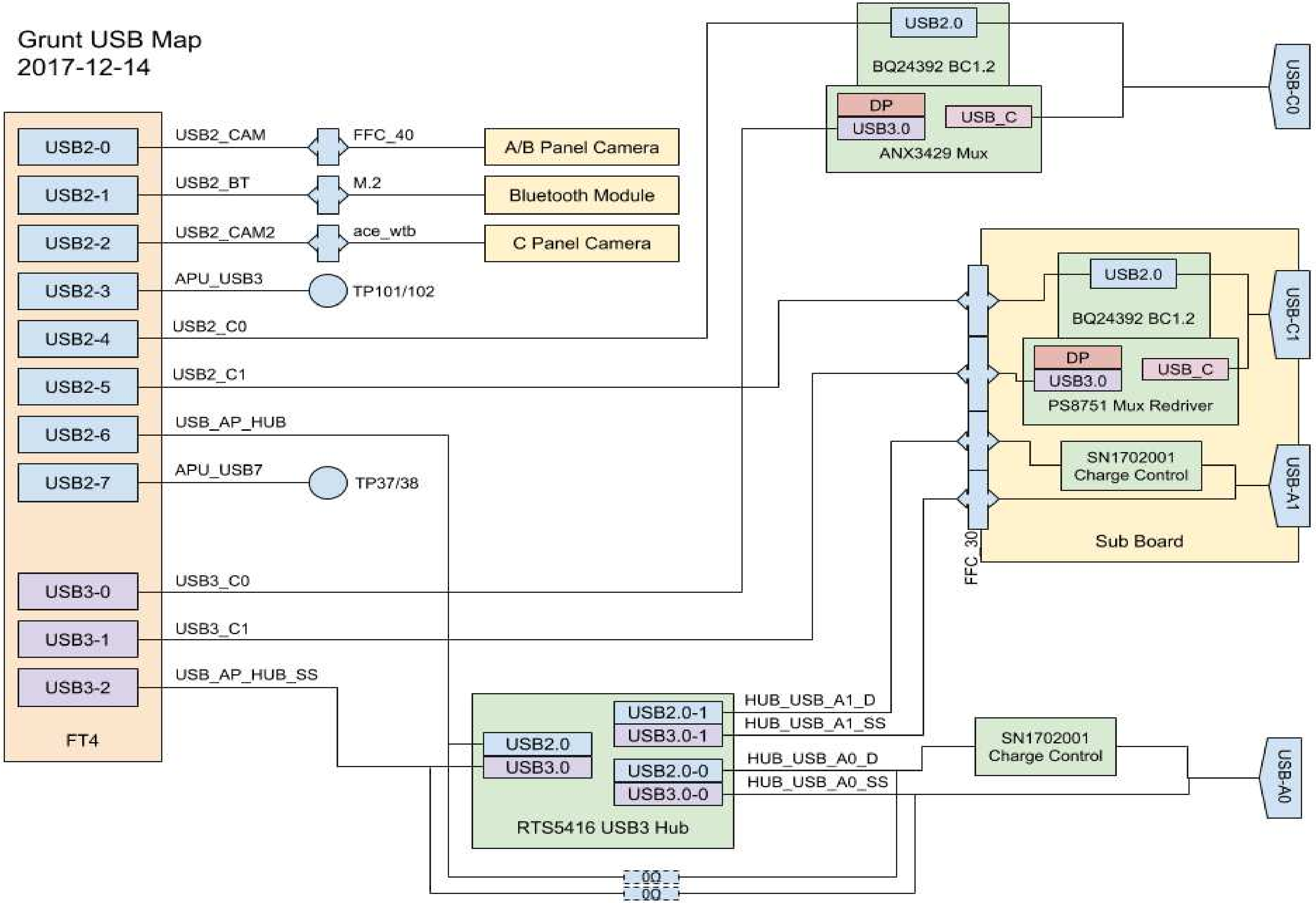

USB2.0
BQ24392 BC1.2
DP
USB3.0
USB_C
ANX3429 Mux
USB-C0
USB2-0
USB2-1
USB2-2
USB2-3
USB2-4
USB2-5
USB2-6
USB2-7
USB3-0
USB3-1
USB3-2
FT4
USB2_CAM
FFC_40
A/B Panel Camera
USB2_BT
M.2
Bluetooth Module
USB2_CAM2
ace_wtb
C Panel Camera
APU_USB3
TP101/102
USB2_C0
USB2_C1
USB_AP_HUB
APU_USB7
TP37/38
USB3_C0
USB3_C1
USB_AP_HUB_SS
USB2.0
BQ24392 BC1.2
USB-C1
DP
USB3.0
USB_C
PS8751 Mux Redriver
SN1702001
Charge Control
USB-A1
Sub Board
FFC_30
USB2.0-1
USB3.0-1
USB2.0
USB3.0
USB2.0-0
USB3.0-0
RTS5416 USB3 Hub
HUB_USB_A1_D
HUB_USB_A1_SS
HUB_USB_A0_D
HUB_USB_A0_SS
SN1702001
Charge Control
USB-A0
00
00

Optional Bypass path
for designs with a single
Type-A port

Quanta Computer Inc.
PROJECT :GRUNT

Size	Document Number	Rev
	USB MAP	2A

Date: Wednesday, November 14, 2018 Sheet 6 of 35

MAX FT4 SPEED: DDR4-1866

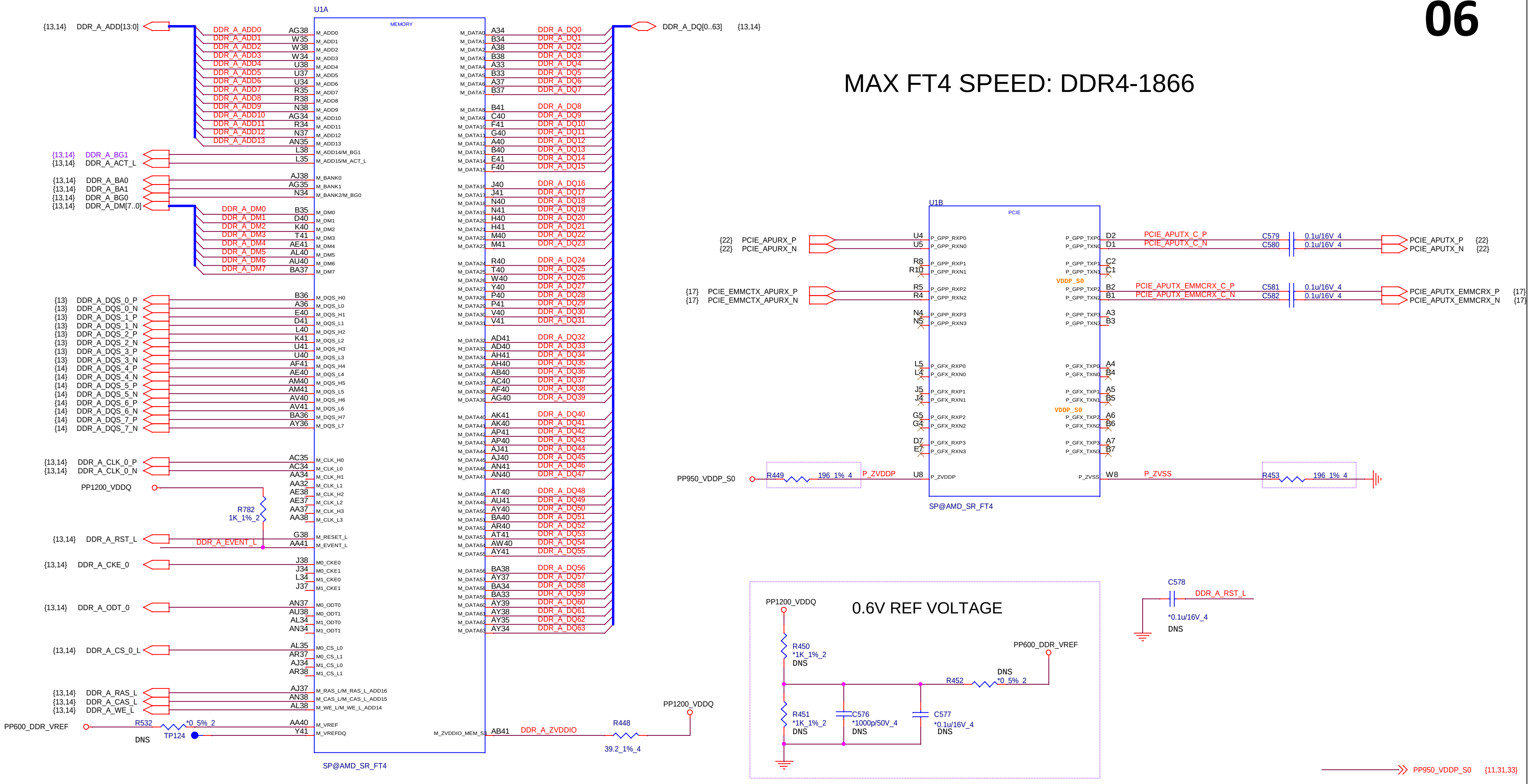
U1A
MEMORY
{13,14} DDR_A_ADD[13:0]
DDR_A_ADD0 AG38 M_ADD0
DDR_A_ADD1 W35 M_ADD1
DDR_A_ADD2 W38 M_ADD2
DDR_A_ADD3 W34 M_ADD3
DDR_A_ADD4 U38 M_ADD4
DDR_A_ADD5 U37 M_ADD5
DDR_A_ADD6 U34 M_ADD6
DDR_A_ADD7 R35 M_ADD7
DDR_A_ADD8 R38 M_ADD8
DDR_A_ADD9 N38 M_ADD9
DDR_A_ADD10 AG34 M_ADD10
DDR_A_ADD11 R34 M_ADD11
DDR_A_ADD12 N37 M_ADD12
DDR_A_ADD13 AN35 M_ADD13
{13,14} DDR_A_BG1 L38 M_ADD14/M_BG1
{13,14} DDR_A_ACT_L L35 M_ADD15/M_ACT_L
{13,14} DDR_A_BA0 AJ38 M_BANK0
{13,14} DDR_A_BA1 AG35 M_BANK1
{13,14} DDR_A_BG0 N34 M_BANK2/M_BG0
{13,14} DDR_A_DM[7..0]
DDR_A_DM0 B35 M_DM0
DDR_A_DM1 D40 M_DM1
DDR_A_DM2 K40 M_DM2
DDR_A_DM3 T41 M_DM3
DDR_A_DM4 AE41 M_DM4
DDR_A_DM5 AL40 M_DM5
DDR_A_DM6 AU40 M_DM6
DDR_A_DM7 BA37 M_DM7
{13} DDR_A_DQS_0_P B36 M_DQS_H0
{13} DDR_A_DQS_0_N A36 M_DQS_L0
{13} DDR_A_DQS_1_P E40 M_DQS_H1
{13} DDR_A_DQS_1_N D41 M_DQS_L1
{13} DDR_A_DQS_2_P L40 M_DQS_H2
{13} DDR_A_DQS_2_N K41 M_DQS_L2
{13} DDR_A_DQS_3_P U41 M_DQS_H3
{13} DDR_A_DQS_3_N U40 M_DQS_L3
{14} DDR_A_DQS_4_P AF41 M_DQS_H4
{14} DDR_A_DQS_4_N AE40 M_DQS_L4
{14} DDR_A_DQS_5_P AM40 M_DQS_H5
{14} DDR_A_DQS_5_N AM41 M_DQS_L5
{14} DDR_A_DQS_6_P AV40 M_DQS_H6
{14} DDR_A_DQS_6_N AV41 M_DQS_L6
{14} DDR_A_DQS_7_P BA36 M_DQS_H7
{14} DDR_A_DQS_7_N AY36 M_DQS_L7
{13,14} DDR_A_CLK_0_P AC35 M_CLK_H0
{13,14} DDR_A_CLK_0_N AC34 M_CLK_L0
AA34 M_CLK_H1
AA32 M_CLK_L1
AE38 M_CLK_H2
AE37 M_CLK_L2
AA37 M_CLK_H3
AA38 M_CLK_L3
PP1200_VDDQ
R782
1K_1%_2
{13,14} DDR_A_RST_L G38 M_RESET_L
DDR_A_EVENT_L AA41 M_EVENT_L
{13,14} DDR_A_CKE_0 J38 M0_CKE0
J34 M0_CKE1
L34 M1_CKE0
J37 M1_CKE1
{13,14} DDR_A_ODT_0 AN37 M0_ODT0
AU38 M0_ODT1
AL34 M1_ODT0
AN34 M1_ODT1
{13,14} DDR_A_CS_0_L AL35 M0_CS_L0
AR37 M0_CS_L1
AJ34 M1_CS_L0
AR38 M1_CS_L1
{13,14} DDR_A_RAS_L AJ37 M_RAS_L/M_RAS_L_ADD16
{13,14} DDR_A_CAS_L AN38 M_CAS_L/M_CAS_L_ADD15
{13,14} DDR_A_WE_L AL38 M_WE_L/M_WE_L_ADD14
PP600_DDR_VREF
R532
*0_5%_2
DNS
TP124
AA40 M_VREF
Y41 M_VREFDQ
M_ZVDDIO_MEM_S AB41 DDR_A_ZVDDIO
R448
39.2_1%_4
PP1200_VDDQ
SP@AMD_SR_FT4
DDR_A_DQ[0..63] {13,14}
M_DATA0 A34 DDR_A_DQ0
M_DATA1 B34 DDR_A_DQ1
M_DATA2 A38 DDR_A_DQ2
M_DATA3 B38 DDR_A_DQ3
M_DATA4 A33 DDR_A_DQ4
M_DATA5 B33 DDR_A_DQ5
M_DATA6 A37 DDR_A_DQ6
M_DATA7 B37 DDR_A_DQ7
M_DATA8 B41 DDR_A_DQ8
M_DATA9 C40 DDR_A_DQ9
M_DATA10 F41 DDR_A_DQ10
M_DATA11 G40 DDR_A_DQ11
M_DATA12 A40 DDR_A_DQ12
M_DATA13 B40 DDR_A_DQ13
M_DATA14 E41 DDR_A_DQ14
M_DATA15 F40 DDR_A_DQ15
M_DATA16 J40 DDR_A_DQ16
M_DATA17 J41 DDR_A_DQ17
M_DATA18 N40 DDR_A_DQ18
M_DATA19 N41 DDR_A_DQ19
M_DATA20 H40 DDR_A_DQ20
M_DATA21 H41 DDR_A_DQ21
M_DATA22 M40 DDR_A_DQ22
M_DATA23 M41 DDR_A_DQ23
M_DATA24 R40 DDR_A_DQ24
M_DATA25 T40 DDR_A_DQ25
M_DATA26 W40 DDR_A_DQ26
M_DATA27 Y40 DDR_A_DQ27
M_DATA28 P40 DDR_A_DQ28
M_DATA29 P41 DDR_A_DQ29
M_DATA30 V40 DDR_A_DQ30
M_DATA31 V41 DDR_A_DQ31
M_DATA32 AD41 DDR_A_DQ32
M_DATA33 AD40 DDR_A_DQ33
M_DATA34 AH41 DDR_A_DQ34
M_DATA35 AH40 DDR_A_DQ35
M_DATA36 AB40 DDR_A_DQ36
M_DATA37 AC40 DDR_A_DQ37
M_DATA38 AF40 DDR_A_DQ38
M_DATA39 AG40 DDR_A_DQ39
M_DATA40 AK41 DDR_A_DQ40
M_DATA41 AK40 DDR_A_DQ41
M_DATA42 AP41 DDR_A_DQ42
M_DATA43 AP40 DDR_A_DQ43
M_DATA44 AJ41 DDR_A_DQ44
M_DATA45 AJ40 DDR_A_DQ45
M_DATA46 AN41 DDR_A_DQ46
M_DATA47 AN40 DDR_A_DQ47
M_DATA48 AT40 DDR_A_DQ48
M_DATA49 AU41 DDR_A_DQ49
M_DATA50 AY40 DDR_A_DQ50
M_DATA51 BA40 DDR_A_DQ51
M_DATA52 AR40 DDR_A_DQ52
M_DATA53 AT41 DDR_A_DQ53
M_DATA54 AW40 DDR_A_DQ54
M_DATA55 AY41 DDR_A_DQ55
M_DATA56 BA38 DDR_A_DQ56
M_DATA57 AY37 DDR_A_DQ57
M_DATA58 BA34 DDR_A_DQ58
M_DATA59 BA33 DDR_A_DQ59
M_DATA60 AY39 DDR_A_DQ60
M_DATA61 AY38 DDR_A_DQ61
M_DATA62 AY35 DDR_A_DQ62
M_DATA63 AY34 DDR_A_DQ63
U1B
PCIE
{22} PCIE_APURX_P U4 P_GPP_RXP0
{22} PCIE_APURX_N U5 P_GPP_RXN0
R8 P_GPP_RXP1
R10 P_GPP_RXN1
{17} PCIE_EMMCTX_APURX_P R5 P_GPP_RXP2
{17} PCIE_EMMCTX_APURX_N R4 P_GPP_RXN2
N4 P_GPP_RXP3
N5 P_GPP_RXN3
L5 P_GFX_RXP0
L4 P_GFX_RXN0
J5 P_GFX_RXP1
J4 P_GFX_RXN1
G5 P_GFX_RXP2
G4 P_GFX_RXN2
D7 P_GFX_RXP3
E7 P_GFX_RXN3
PP950_VDDP_S0
R449
196_1%_4
P_ZVDDP U8 P_ZVDDP
P_GPP_TXP0 D2 PCIE_APUTX_C_P C579 0.1u/16V_4 PCIE_APUTX_P {22}
P_GPP_TXN0 D1 PCIE_APUTX_C_N C580 0.1u/16V_4 PCIE_APUTX_N {22}
P_GPP_TXP1 C2
P_GPP_TXN1 C1
VDDP_S0
P_GPP_TXP2 B2 PCIE_APUTX_EMMCRX_C_P C581 0.1u/16V_4 PCIE_APUTX_EMMCRX_P {17}
P_GPP_TXN2 B1 PCIE_APUTX_EMMCRX_C_N C582 0.1u/16V_4 PCIE_APUTX_EMMCRX_N {17}
P_GPP_TXP3 A3
P_GPP_TXN3 B3
P_GFX_TXP0 A4
P_GFX_TXN0 B4
P_GFX_TXP1 A5
P_GFX_TXN1 B5
VDDP_S0
P_GFX_TXP2 A6
P_GFX_TXN2 B6
P_GFX_TXP3 A7
P_GFX_TXN3 B7
P_ZVSS W8 P_ZVSS
R453
196_1%_4
SP@AMD_SR_FT4
0.6V REF VOLTAGE
PP1200_VDDQ
R450
*1K_1%_2
DNS
PP600_DDR_VREF
DNS
R452
*0_5%_2
R451
*1K_1%_2
DNS
C576
*1000p/50V_4
DNS
C577
*0.1u/16V_4
DNS
C578
DDR_A_RST_L
*0.1u/16V_4
DNS
PP950_VDDP_S0 {11,31,33}

Quanta Computer Inc.

PROJECT : GRUNT

Size	Document Number	Rev
	FT4 MEMORY PCIE	2A

Date: Wednesday, November 14, 2018 Sheet 7 of 35

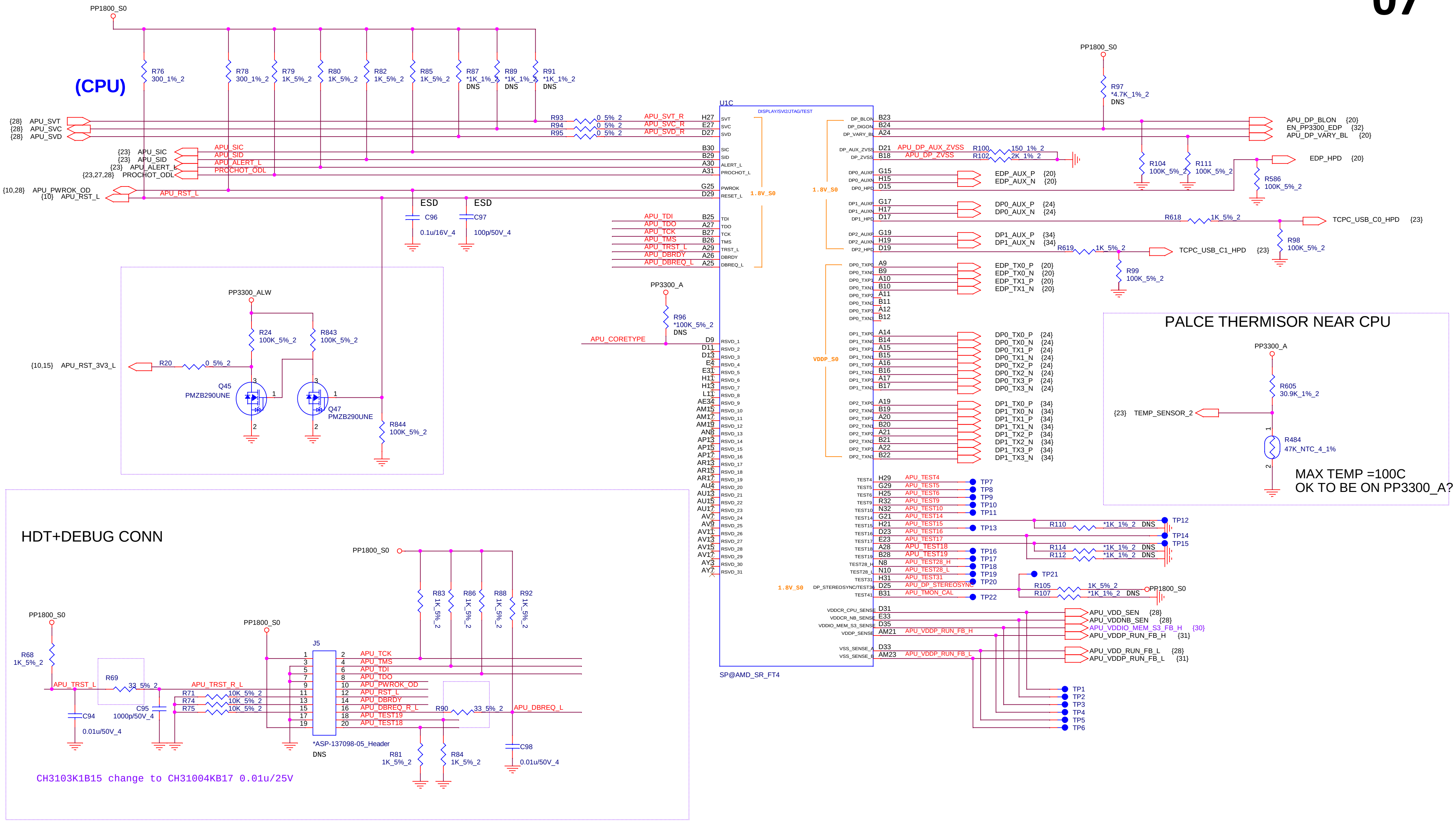
(CPU)
PP1800_S0
R76 300_1%_2
R78 300_1%_2
R79 1K_5%_2
R80 1K_5%_2
R82 1K_5%_2
R85 1K_5%_2
R87 *1K_1%_2 DNS
R89 *1K_1%_2 DNS
R91 *1K_1%_2 DNS
{28} APU_SVT
{28} APU_SVC
{28} APU_SVD
R93 0_5%_2
R94 0_5%_2
R95 0_5%_2
APU_SVT_R
APU_SVC_R
APU_SVD_R
{23} APU_SIC
{23} APU_SID
{23} APU_ALERT_L
{23,27,28} PROCHOT_ODL
APU_SIC
APU_SID
APU_ALERT_L
PROCHOT_ODL
{10,28} APU_PWROK_OD
{10} APU_RST_L
APU_RST_L
ESD
ESD
C96 0.1u/16V_4
C97 100p/50V_4
APU_TDI
APU_TDO
APU_TCK
APU_TMS
APU_TRST_L
APU_DBRDY
APU_DBREQ_L
U1C
DISPLAY/SVI2/JTAG/TEST
SVT
SVC
SVD
SIC
SID
ALERT_L
PROCHOT_L
PWROK
RESET_L
TDI
TDO
TCK
TMS
TRST_L
DBRDY
DBREQ_L
1.8V_S0
VDDP_S0
PP3300_A
R96 *100K_5%_2 DNS
APU_CORETYPE
RSVD_1
RSVD_31
PP3300_ALW
R24 100K_5%_2
R843 100K_5%_2
{10,15} APU_RST_3V3_L
R20 0_5%_2
Q45 PMZB290UNE
Q47 PMZB290UNE
R844 100K_5%_2
DP_BLON
DP_DIGON
DP_VARY_BL
DP_AUX_ZVSS
DP_ZVSS
APU_DP_AUX_ZVSS
APU_DP_ZVSS
R100 150_1%_2
R102 2K_1%_2
PP1800_S0
R97 *4.7K_1%_2 DNS
APU_DP_BLON {20}
EN_PP3300_EDP {32}
APU_DP_VARY_BL {20}
R104 100K_5%_2
R111 100K_5%_2
EDP_HPD {20}
R586 100K_5%_2
EDP_AUX_P {20}
EDP_AUX_N {20}
DP0_AUX_P {24}
DP0_AUX_N {24}
R618 1K_5%_2
TCPC_USB_C0_HPD {23}
DP1_AUX_P {34}
DP1_AUX_N {34}
R619 1K_5%_2
TCPC_USB_C1_HPD {23}
R98 100K_5%_2
R99 100K_5%_2
EDP_TX0_P {20}
EDP_TX0_N {20}
EDP_TX1_P {20}
EDP_TX1_N {20}
DP0_TX0_P {24}
DP0_TX0_N {24}
DP0_TX1_P {24}
DP0_TX1_N {24}
DP0_TX2_P {24}
DP0_TX2_N {24}
DP0_TX3_P {24}
DP0_TX3_N {24}
DP1_TX0_P {34}
DP1_TX0_N {34}
DP1_TX1_P {34}
DP1_TX1_N {34}
DP1_TX2_P {34}
DP1_TX2_N {34}
DP1_TX3_P {34}
DP1_TX3_N {34}
PALCE THERMISOR NEAR CPU
PP3300_A
R605 30.9K_1%_2
{23} TEMP_SENSOR_2
R484 47K_NTC_4_1%
MAX TEMP =100C
OK TO BE ON PP3300_A?
APU_TEST4
APU_TEST5
APU_TEST6
APU_TEST9
APU_TEST10
APU_TEST14
APU_TEST15
APU_TEST16
APU_TEST17
APU_TEST18
APU_TEST19
APU_TEST28_H
APU_TEST28_L
APU_TEST31
APU_DP_STEREOSYNC
APU_TMON_CAL
TP7
TP8
TP9
TP10
TP11
TP12
TP13
TP14
TP15
TP16
TP17
TP18
TP19
TP20
TP21
TP22
R110 *1K_1%_2 DNS
R114 *1K_1%_2 DNS
R112 *1K_1%_2 DNS
R105 1K_5%_2
R107 *1K_1%_2 DNS
PP1800_S0
DP_STEREOSYNC/TEST36
VDDCR_CPU_SENSE
VDDCR_NB_SENSE
VDDIO_MEM_S3_SENSE
VDDP_SENSE
VSS_SENSE_A
VSS_SENSE_B
APU_VDDP_RUN_FB_H
APU_VDDP_RUN_FB_L
APU_VDD_SEN {28}
APU_VDDNB_SEN {28}
APU_VDDIO_MEM_S3_FB_H {30}
APU_VDDP_RUN_FB_H {31}
APU_VDD_RUN_FB_L {28}
APU_VDDP_RUN_FB_L {31}
TP1
TP2
TP3
TP4
TP5
TP6
SP@AMD_SR_FT4
HDT+DEBUG CONN
PP1800_S0
R83 1K_5%_2
R86 1K_5%_2
R88 1K_5%_2
R92 1K_5%_2
PP1800_S0
R68 1K_5%_2
APU_TRST_L
R69 33_5%_2
APU_TRST_R_L
C94 0.01u/50V_4
C95 1000p/50V_4
R71 10K_5%_2
R74 10K_5%_2
R75 10K_5%_2
PP1800_S0
J5
APU_TCK
APU_TMS
APU_TDI
APU_TDO
APU_PWROK_OD
APU_RST_L
APU_DBRDY
APU_DBREQ_R_L
APU_TEST19
APU_TEST18
R90 33_5%_2
APU_DBREQ_L
C98 0.01u/50V_4
*ASP-137098-05_Header
DNS
R81 1K_5%_2
R84 1K_5%_2
CH3103K1B15 change to CH31004KB17 0.01u/25V

Quanta Computer Inc.

PROJECT : GRUNT

Size	Document Number	Rev
	FT4 eDP/CLK/SVI2/JTAG/MISC	2A

Date: Wednesday, November 14, 2018 Sheet 8 of 35

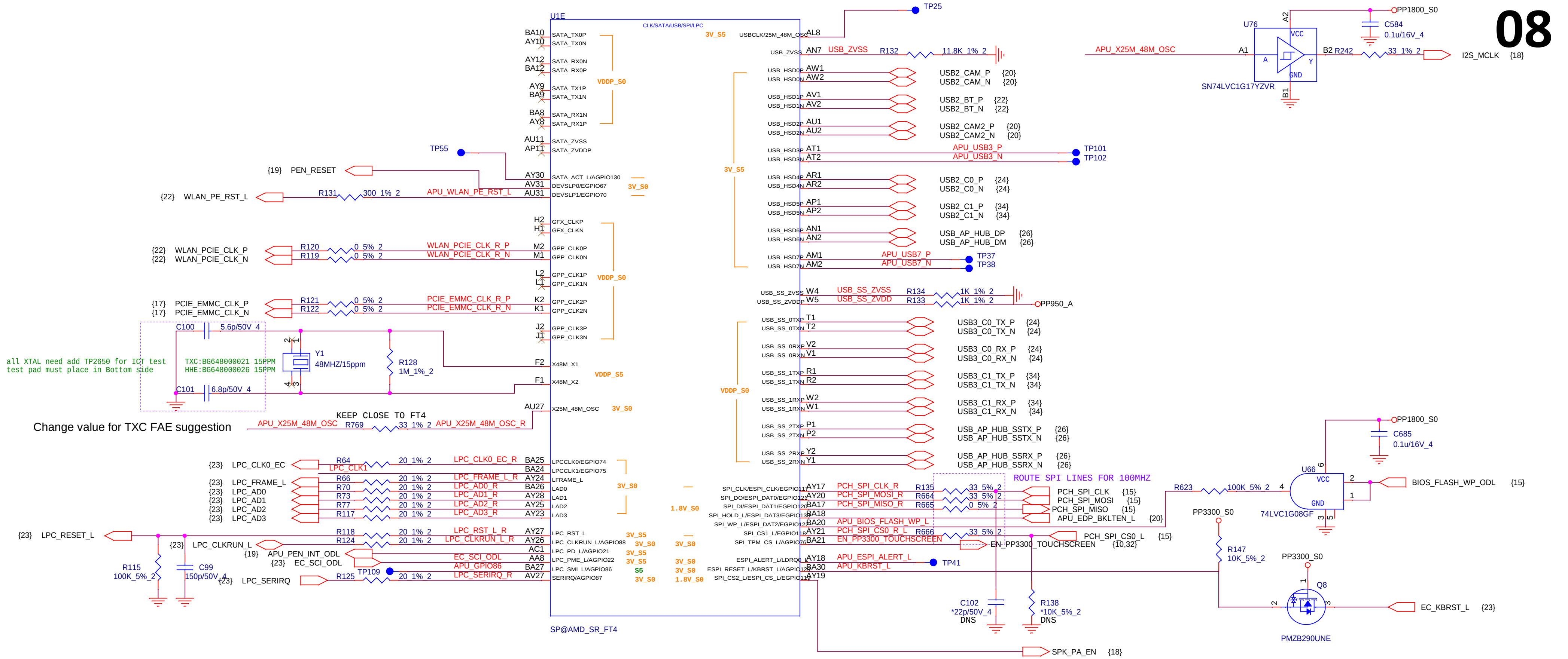
U1E
CLK/SATA/USB/SPI/LPC
SP@AMD_SR_FT4
SATA_TX0P
SATA_TX0N
SATA_RX0N
SATA_RX0P
SATA_TX1P
SATA_TX1N
SATA_RX1N
SATA_RX1P
SATA_ZVSS
SATA_ZVDDP
VDDP_S0
TP55
{19} PEN_RESET
SATA_ACT_L/AGPIO130
DEVSLP0/EGPIO67
DEVSLP1/EGPIO70
3V_S0
{22} WLAN_PE_RST_L
R131 300_1% 2
APU_WLAN_PE_RST_L
GFX_CLKP
GFX_CLKN
{22} WLAN_PCIE_CLK_P
{22} WLAN_PCIE_CLK_N
R120 0_5% 2
R119 0_5% 2
WLAN_PCIE_CLK_R_P
WLAN_PCIE_CLK_R_N
GPP_CLK0P
GPP_CLK0N
GPP_CLK1P
GPP_CLK1N
{17} PCIE_EMMC_CLK_P
{17} PCIE_EMMC_CLK_N
R121 0_5% 2
R122 0_5% 2
PCIE_EMMC_CLK_R_P
PCIE_EMMC_CLK_R_N
GPP_CLK2P
GPP_CLK2N
GPP_CLK3P
GPP_CLK3N
C100 5.6p/50V_4
C101 6.8p/50V_4
Y1 48MHZ/15ppm
R128 1M_1%_2
X48M_X1
X48M_X2
VDDP_S5
all XTAL need add TP2650 for ICT test
test pad must place in Bottom side
TXC:BG648000021 15PPM
HHE:BG648000026 15PPM
KEEP CLOSE TO FT4
Change value for TXC FAE suggestion
APU_X25M_48M_OSC R769 33_1% 2 APU_X25M_48M_OSC_R
X25M_48M_OSC
{23} LPC_CLK0_EC
R64 20_1% 2 LPC_CLK0_EC_R
LPC_CLK1
{23} LPC_FRAME_L
{23} LPC_AD0
{23} LPC_AD1
{23} LPC_AD2
{23} LPC_AD3
R66 R70 R73 R77 R117 20_1% 2
LPC_FRAME_L_R
LPC_AD0_R
LPC_AD1_R
LPC_AD2_R
LPC_AD3_R
LPCCLK0/EGPIO74
LPCCLK1/EGPIO75
LFRAME_L
LAD0
LAD1
LAD2
LAD3
{23} LPC_RESET_L
{23} LPC_CLKRUN_L
R118 20_1% 2 LPC_RST_L_R
R124 20_1% 2 LPC_CLKRUN_L_R
{19} APU_PEN_INT_ODL
{23} EC_SCI_ODL
EC_SCI_ODL
APU_GPIO86
{23} LPC_SERIRQ
R125 TP109 20_1% 2 LPC_SERIRQ_R
R115 100K_5%_2
C99 150p/50V_4
LPC_RST_L
LPC_CLKRUN_L/AGPIO88
LPC_PD_L/AGPIO21
LPC_PME_L/AGPIO22
LPC_SMI_L/AGPIO86
SERIRQ/AGPIO87
3V_S5
1.8V_S0
S5
TP25
USBCLK/25M_48M_OSC
USB_ZVSS
USB_ZVSS R132 11.8K_1% 2
USB_HSD0P
USB_HSD0N
USB2_CAM_P {20}
USB2_CAM_N {20}
USB2_BT_P {22}
USB2_BT_N {22}
USB2_CAM2_P {20}
USB2_CAM2_N {20}
APU_USB3_P TP101
APU_USB3_N TP102
USB2_C0_P {24}
USB2_C0_N {24}
USB2_C1_P {34}
USB2_C1_N {34}
USB_AP_HUB_DP {26}
USB_AP_HUB_DM {26}
APU_USB7_P TP37
APU_USB7_N TP38
USB_SS_ZVSS R134 1K_1% 2
USB_SS_ZVDD R133 1K_1% 2
PP950_A
USB3_C0_TX_P {24}
USB3_C0_TX_N {24}
USB3_C0_RX_P {24}
USB3_C0_RX_N {24}
USB3_C1_TX_P {34}
USB3_C1_TX_N {34}
USB3_C1_RX_P {34}
USB3_C1_RX_N {34}
USB_AP_HUB_SSTX_P {26}
USB_AP_HUB_SSTX_N {26}
USB_AP_HUB_SSRX_P {26}
USB_AP_HUB_SSRX_N {26}
ROUTE SPI LINES FOR 100MHZ
SPI_CLK/ESPI_CLK/EGPIO117
SPI_DO/ESPI_DAT0/EGPIO121
SPI_DI/ESPI_DAT1/EGPIO120
SPI_HOLD_L/ESPI_DAT3/EGPIO133
SPI_WP_L/ESPI_DAT2/EGPIO122
SPI_CS1_L/EGPIO118
SPI_TPM_CS_L/AGPIO76
ESPI_ALERT_L/LDRQ0
ESPI_RESET_L/KBRST_L/AGPIO129
SPI_CS2_L/ESPI_CS_L/EGPIO119
PCH_SPI_CLK_R R135 33_5% 2 PCH_SPI_CLK {15}
PCH_SPI_MOSI_R R664 33_5% 2 PCH_SPI_MOSI {15}
PCH_SPI_MISO_R R665 0_5% 2 PCH_SPI_MISO {15}
APU_EDP_BKLTEN_L {20}
APU_BIOS_FLASH_WP_L
PCH_SPI_CS0_R_L R666 33_5% 2 PCH_SPI_CS0_L {15}
EN_PP3300_TOUCHSCREEN
EN_PP3300_TOUCHSCREEN {10,32}
APU_ESPI_ALERT_L TP41
APU_KBRST_L
C102 *22p/50V_4 DNS
R138 *10K_5%_2 DNS
SPK_PA_EN {18}
U76
SN74LVC1G17YZVR
VCC
GND
APU_X25M_48M_OSC
B2 R242 33_1% 2
I2S_MCLK {18}
PP1800_S0
C584 0.1u/16V_4
U66
74LVC1G08GF
C685 0.1u/16V_4
R623 100K_5% 2
BIOS_FLASH_WP_ODL {15}
PP3300_S0
R147 10K_5%_2
Q8
PMZB290UNE
EC_KBRST_L {23}

LPC_SMI DOES NOT WORK PROPERLY ON FT4.
THE SIGNAL IS REROUTED TO ANOTHER PIN AS PER THE FT4 ERRATA.

	LPC_FRAME#	LPC_CLK0	LPC_CLK1	MEM_VOLT_SEL/ AGPIO3	SUSCLK/ RTCCLK <INT PU>	SYS_RST/ SYS_RESET <INT PU>	AGPIO11/ BLINK <INT PU>	GEVENT2 <INT PU>	
								CZL	CZ
PU	SPI ROM (DEFAULT)	BOOT FAIL TIMER ENABLED	CLKGEN ENABLED (DEFAULT)	ENHANCED RESET LOGIC	COIN BATT ON BOARD (DEFAULT)	NORMAL RESET MODE (DEFAULT)	LDT_RST#/PG OUTPUT TO APU (DEFAULT)	1.8V SPI ROM (DEFAULT)	ENHANCED RESET
PD	LPC ROM	BOOT FAIL TIMER DISABLED (DEFAULT)	CLKGEN DISABLED	TRADITIONAL RESET LOGIC	COIN BATT NOT ON BOARD	SHORT RESET MODE	OUTPUT TO PADS	3.3V SPI ROM	TRADITIONAL RESET (DEFAULT)

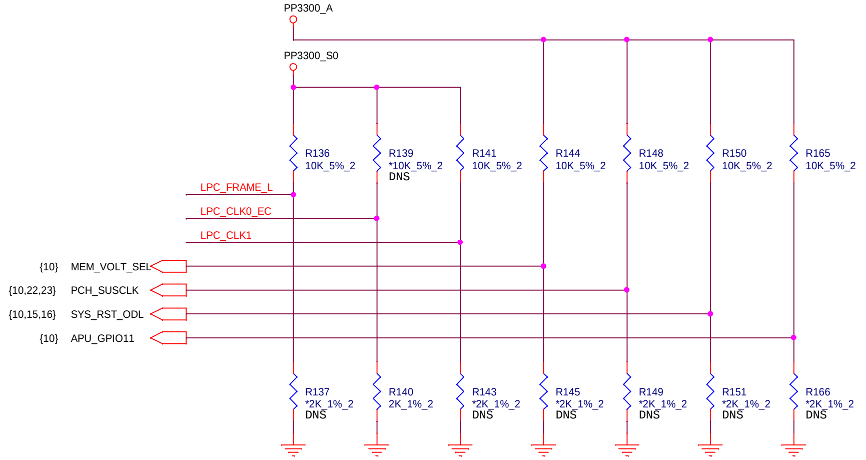
PP3300_A
PP3300_S0
R136 10K_5%_2
R139 *10K_5%_2 DNS
R141 10K_5%_2
R144 10K_5%_2
R148 10K_5%_2
R150 10K_5%_2
R165 10K_5%_2
LPC_FRAME_L
LPC_CLK0_EC
LPC_CLK1
{10} MEM_VOLT_SEL
{10,22,23} PCH_SUSCLK
{10,15,16} SYS_RST_ODL
{10} APU_GPIO11
R137 *2K_1%_2 DNS
R140 2K_1%_2
R143 *2K_1%_2 DNS
R145 *2K_1%_2 DNS
R149 *2K_1%_2 DNS
R151 *2K_1%_2 DNS
R166 *2K_1%_2 DNS

Quanta Computer Inc.

PROJECT : GRUNT

Size | Document Number | Rev 2A

FT4 SATA/USB/SPI/XTAL

(CPU)

09

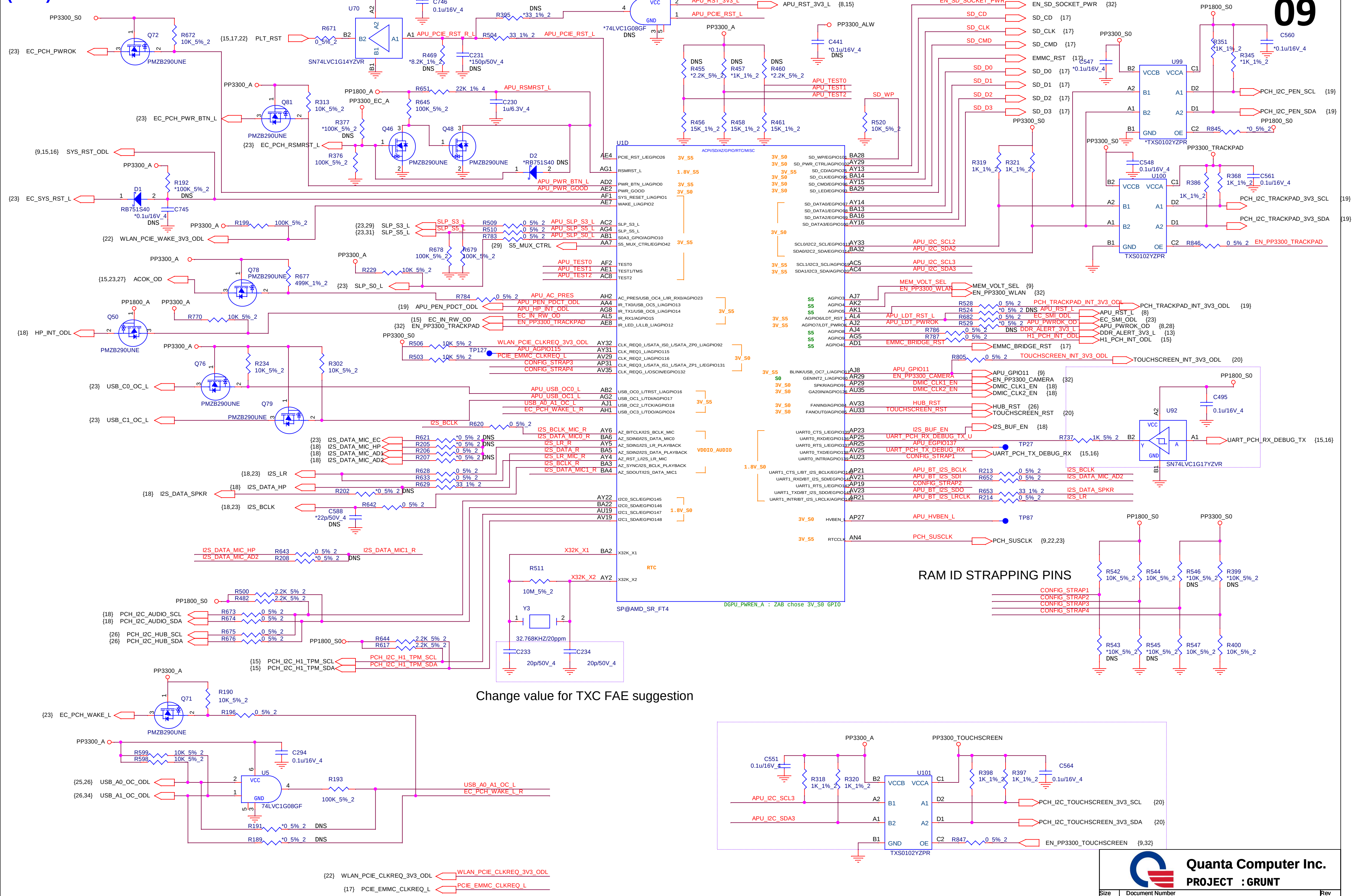
PP3300_ALW
U70
SN74LVC1G14YZVR
C746 0.1u/16V_4
PP3300_S0
Q72 PMZB290UNE
R672 10K_5%_2
{23} EC_PCH_PWROK
{15,17,22} PLT_RST
R671 0_5%_2
R469 *8.2K_1%_2 DNS
C231 *150p/50V_4 DNS
R395 *33_1%_2 DNS
R504 33_1%_2
APU_PCIE_RST_R_L
APU_PCIE_RST_L
U40 *74LVC1G08GF DNS
APU_RST_3V3_L
APU_RST_3V3_L {8,15}
APU_PCIE_RST_L
PP3300_A
Q81 PMZB290UNE
R313 10K_5%_2
{23} EC_PCH_PWR_BTN_L
PP1800_A
PP3300_EC_A
R651 22K_1%_4
APU_RSMRST_L
R645 100K_5%_2
C230 1u/6.3V_4
R377 *100K_5%_2 DNS
Q46 PMZB290UNE
Q48 PMZB290UNE
{23} EC_PCH_RSMRST_L
R376 100K_5%_2
D2 *RB751S40 DNS
APU_PWR_BTN_L
APU_PWR_GOOD
{9,15,16} SYS_RST_ODL
R192 *100K_5%_2 DNS
D1 RB751S40
C745 *0.1u/16V_4 DNS
{23} EC_SYS_RST_L
R199 100K_5%_2
{22} WLAN_PCIE_WAKE_3V3_ODL
{23,29} SLP_S3_L
{23,31} SLP_S5_L
R509 0_5%_2
R510 0_5%_2
R783 0_5%_2
APU_SLP_S3_L
APU_SLP_S5_L
APU_SLP_S0_L
{29} S5_MUX_CTRL
R678 100K_5%_2
R679 100K_5%_2
Q78 PMZB290UNE
R677 499K_1%_2
{15,23,27} ACOK_OD
R229 10K_5%_2
{23} SLP_S0_L
R784 0_5%_2
APU_AC_PRES
{19} APU_PEN_PDCT_ODL
APU_PEN_PDCT_ODL
APU_HP_INT_ODL
{15} EC_IN_RW_OD
{32} EN_PP3300_TRACKPAD
EC_IN_RW_OD
EN_PP3300_TRACKPAD
Q50 PMZB290UNE
R770 10K_5%_2
{18} HP_INT_ODL
PP3300_S0
R506 10K_5%_2
R503 10K_5%_2
TP127
WLAN_PCIE_CLKREQ_3V3_ODL
APU_AGPIO115
PCIE_EMMC_CLKREQ_L
CONFIG_STRAP3
CONFIG_STRAP4
Q76 PMZB290UNE
R234 10K_5%_2
R302 10K_5%_2
Q79 PMZB290UNE
{23} USB_C0_OC_L
{23} USB_C1_OC_L
APU_USB_OC0_L
APU_USB_OC1_L
USB_A0_A1_OC_L
EC_PCH_WAKE_L_R
I2S_BCLK
R620 0_5%_2
I2S_BCLK_MIC_R
I2S_DATA_MIC0_R
I2S_LR_R
I2S_DATA_R
I2S_LR_MIC_R
I2S_BCLK_R
I2S_DATA_MIC1_R
{23} I2S_DATA_MIC_EC
{18} I2S_DATA_MIC_HP
{18} I2S_DATA_MIC_AD1
{18} I2S_DATA_MIC_AD2
R621 *0_5%_2 DNS
R205 *0_5%_2 DNS
R206 0_5%_2
R207 *0_5%_2 DNS
{18,23} I2S_LR
{18} I2S_DATA_HP
{18} I2S_DATA_SPKR
{18,23} I2S_BCLK
R628 0_5%_2
R633 0_5%_2
R629 33_1%_2
R202 *0_5%_2 DNS
R642 0_5%_2
C588 *22p/50V_4 DNS
I2S_DATA_MIC_HP
I2S_DATA_MIC_AD2
R643 0_5%_2
R208 *0_5%_2 DNS
I2S_DATA_MIC1_R
PP1800_S0
R500 2.2K_5%_2
R482 2.2K_5%_2
{18} PCH_I2C_AUDIO_SCL
{18} PCH_I2C_AUDIO_SDA
R673 0_5%_2
R674 0_5%_2
{26} PCH_I2C_HUB_SCL
{26} PCH_I2C_HUB_SDA
R675 0_5%_2
R676 0_5%_2
R644 2.2K_5%_2
R617 2.2K_5%_2
{15} PCH_I2C_H1_TPM_SCL
{15} PCH_I2C_H1_TPM_SDA
PCH_I2C_H1_TPM_SCL
PCH_I2C_H1_TPM_SDA
X32K_X1
X32K_X2
R511 10M_5%_2
Y3 32.768KHZ/20ppm
C233 20p/50V_4
C234 20p/50V_4
Change value for TXC FAE suggestion
Q71 PMZB290UNE
R190 10K_5%_2
R196 0_5%_2
{23} EC_PCH_WAKE_L
R599 10K_5%_2
R598 10K_5%_2
C294 0.1u/16V_4
U5 74LVC1G08GF
{25,26} USB_A0_OC_ODL
{26,34} USB_A1_OC_ODL
R193 100K_5%_2
USB_A0_A1_OC_L
EC_PCH_WAKE_L_R
R191 *0_5%_2 DNS
R189 *0_5%_2 DNS
{22} WLAN_PCIE_CLKREQ_3V3_ODL
{17} PCIE_EMMC_CLKREQ_L
U1D
ACPI/SD/AZ/GPIO/RTC/MISC
SP@AMD_SR_FT4
DGPU_PWREN_A : ZAB chose 3V_S0 GPIO
PCIE_RST_L/EGPIO26
RSMRST_L
PWR_BTN_L/AGPIO0
PWR_GOOD
SYS_RESET_L/AGPIO1
WAKE_L/AGPIO2
SLP_S3_L
SLP_S5_L
S0A3_GPIO/AGPIO10
S5_MUX_CTRL/EGPIO42
TEST0
TEST1/TMS
TEST2
AC_PRES/USB_OC4_L/IR_RX0/AGPIO23
IR_TX0/USB_OC5_L/AGPIO13
IR_TX1/USB_OC6_L/AGPIO14
IR_RX1/AGPIO15
IR_LED_L/LLB_L/AGPIO12
CLK_REQ0_L/SATA_IS0_L/SATA_ZP0_L/AGPIO92
CLK_REQ1_L/AGPIO115
CLK_REQ2_L/AGPIO116
CLK_REQ3_L/SATA_IS1_L/SATA_ZP1_L/AGPIO131
CLK_REQG_L/OSCIN/EGPIO132
USB_OC0_L/TRST_L/AGPIO16
USB_OC1_L/TDI/AGPIO17
USB_OC2_L/TCK/AGPIO18
USB_OC3_L/TDO/AGPIO24
AZ_BITCLK/I2S_BCLK_MIC
AZ_SDIN0/I2S_DATA_MIC0
AZ_SDIN1/I2S_LR_PLAYBACK
AZ_SDIN2/I2S_DATA_PLAYBACK
AZ_RST_L/I2S_LR_MIC
AZ_SYNC/I2S_BCLK_PLAYBACK
AZ_SDOUT/I2S_DATA_MIC1
VDDIO_AUDIO
I2C0_SCL/EGPIO145
I2C0_SDA/EGPIO146
I2C1_SCL/EGPIO147
I2C1_SDA/EGPIO148
X32K_X1
X32K_X2
RTC
SD_WP/EGPIO101
SD_PWR_CTRL/AGPIO102
SD_CD/AGPIO25
SD_CLK/EGPIO95
SD_CMD/EGPIO96
SD_LED/EGPIO93
SD_DATA0/EGPIO97
SD_DATA1/EGPIO98
SD_DATA2/EGPIO99
SD_DATA3/EGPIO100
SCL0/I2C2_SCL/EGPIO113
SDA0/I2C2_SDA/EGPIO114
SCL1/I2C3_SCL/AGPIO19
SDA1/I2C3_SDA/AGPIO20
AGPIO3
AGPIO4
AGPIO5
AGPIO6/LDT_RST_L
AGPIO7/LDT_PWROK
AGPIO8
AGPIO9
AGPIO40
BLINK/USB_OC7_L/AGPIO11
GENINT2_L/AGPIO90
SPKR/AGPIO91
GA20IN/AGPIO126
FANIN0/AGPIO84
FANOUT0/AGPIO85
UART0_CTS_L/EGPIO135
UART0_RXD/EGPIO136
UART0_RTS_L/EGPIO137
UART0_TXD/EGPIO138
UART0_INTR/AGPIO139
UART1_CTS_L/BT_I2S_BCLK/EGPIO140
UART1_RXD/BT_I2S_SDI/EGPIO141
UART1_RTS_L/EGPIO142
UART1_TXD/BT_I2S_SDO/EGPIO143
UART1_INTR/BT_I2S_LRCLK/AGPIO144
HVBEN_L
RTCCLK
EN_SD_SOCKET_PWR
EN_SD_SOCKET_PWR {32}
SD_CD {17}
SD_CLK {17}
SD_CMD {17}
EMMC_RST {17}
SD_D0 {17}
SD_D1 {17}
SD_D2 {17}
SD_D3 {17}
PP3300_A
R455 *2.2K_5%_2 DNS
R457 *1K_1%_2 DNS
R460 *2.2K_5%_2 DNS
C441 *0.1u/16V_4 DNS
APU_TEST0
APU_TEST1
APU_TEST2
R456 15K_1%_2
R458 15K_1%_2
R461 15K_1%_2
SD_WP
R520 10K_5%_2
U99 *TXS0102YZPR
R351 *1K_1%_2
R345 *1K_1%_2
C547 *0.1u/16V_4
C560 *0.1u/16V_4
PCH_I2C_PEN_SCL {19}
PCH_I2C_PEN_SDA {19}
R845 *0_5%_2
PP3300_TRACKPAD
C548 0.1u/16V_4
U100 TXS0102YZPR
R319 1K_1%_2
R321 1K_1%_2
R386 1K_1%_2
R368 1K_1%_2
C561 0.1u/16V_4
PCH_I2C_TRACKPAD_3V3_SCL {19}
PCH_I2C_TRACKPAD_3V3_SDA {19}
R846 0_5%_2
EN_PP3300_TRACKPAD
APU_I2C_SCL2
APU_I2C_SDA2
APU_I2C_SCL3
APU_I2C_SDA3
MEM_VOLT_SEL
EN_PP3300_WLAN
MEM_VOLT_SEL {9}
EN_PP3300_WLAN {32}
R528 0_5%_2
R524 *0_5%_2 DNS
R682 0_5%_2
R529 *0_5%_2
R786 0_5%_2 DNS
R787 0_5%_2
PCH_TRACKPAD_INT_3V3_ODL
PCH_TRACKPAD_INT_3V3_ODL {19}
APU_RST_L {8}
EC_SMI_ODL {23}
APU_PWROK_OD {8,28}
DDR_ALERT_3V3_L {13}
H1_PCH_INT_ODL {15}
APU_LDT_RST_L
APU_LDT_PWROK
EMMC_BRIDGE_RST
EMMC_BRIDGE_RST {17}
R805 0_5%_2
TOUCHSCREEN_INT_3V3_ODL
TOUCHSCREEN_INT_3V3_ODL {20}
APU_GPIO11
EN_PP3300_CAMERA
DMIC_CLK1_EN
DMIC_CLK2_EN
APU_GPIO11 {9}
EN_PP3300_CAMERA {32}
DMIC_CLK1_EN {18}
DMIC_CLK2_EN {18}
HUB_RST
TOUCHSCREEN_RST
HUB_RST {26}
TOUCHSCREEN_RST {20}
I2S_BUF_EN
I2S_BUF_EN {18}
UART_PCH_RX_DEBUG_TX_U
APU_EGPIO137
UART_PCH_TX_DEBUG_RX
CONFIG_STRAP1
TP27
UART_PCH_TX_DEBUG_RX {15,16}
R737 1K_5%_2
U92 SN74LVC1G17YZVR
C495 0.1u/16V_4
UART_PCH_RX_DEBUG_TX {15,16}
APU_BT_I2S_BCLK
APU_BT_I2S_SDI
CONFIG_STRAP2
APU_BT_I2S_SDO
APU_BT_I2S_LRCLK
R213 0_5%_2
R652 0_5%_2
R653 33_1%_2
R214 0_5%_2
I2S_BCLK
I2S_DATA_MIC_AD2
I2S_DATA_SPKR
I2S_LR
APU_HVBEN_L
TP87
PCH_SUSCLK
PCH_SUSCLK {9,22,23}
RAM ID STRAPPING PINS
PP1800_S0
PP3300_S0
R542 10K_5%_2
R544 10K_5%_2
R546 *10K_5%_2 DNS
R399 *10K_5%_2 DNS
CONFIG_STRAP1
CONFIG_STRAP2
CONFIG_STRAP3
CONFIG_STRAP4
R543 *10K_5%_2 DNS
R545 *10K_5%_2 DNS
R547 10K_5%_2
R400 10K_5%_2
PP3300_TOUCHSCREEN
C551 0.1u/16V_4
R318 1K_1%_2
R320 1K_1%_2
U101 TXS0102YZPR
R398 1K_1%_2
R397 1K_1%_2
C564 0.1u/16V_4
APU_I2C_SCL3
APU_I2C_SDA3
PCH_I2C_TOUCHSCREEN_3V3_SCL {20}
PCH_I2C_TOUCHSCREEN_3V3_SDA {20}
R847 0_5%_2
EN_PP3300_TOUCHSCREEN {9,32}

Quanta Computer Inc.

PROJECT : GRUNT

Size | Document Number | Rev
FT4 GEVENT/GPIO/SD/AZ | 2A

Date: Wednesday, November 14, 2018 | Sheet 10 of 35

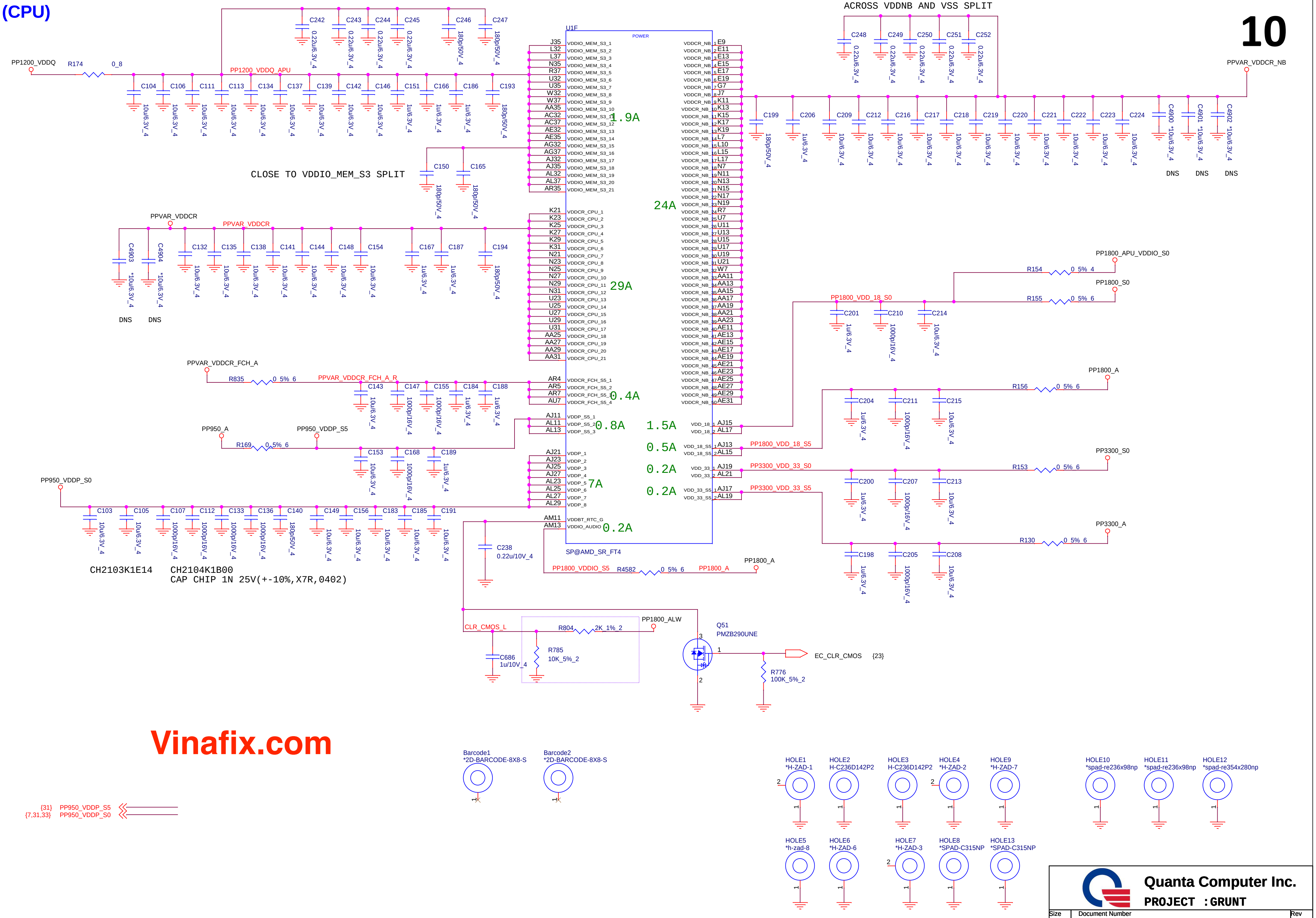
ACROSS VDDNB AND VSS SPLIT
PP1200_VDDQ
R174
0_8
PP1200_VDDQ_APU
C242 C243 C244 C245 C246 C247
0.22u/6.3V_4
180p/50V_4
C104 C106 C111 C113 C134 C137 C139 C142 C146 C151 C166 C186 C193
10u/6.3V_4
1u/6.3V_4
180p/50V_4
U1F
POWER
VDDIO_MEM_S3_1 … VDDIO_MEM_S3_21
J35 L32 L37 N35 R37 U32 U35 W32 W37 AA35 AC32 AC37 AE32 AE35 AG32 AG37 AJ32 AJ35 AL32 AL37 AR35
1.9A
C150 C165
180p/50V_4
CLOSE TO VDDIO_MEM_S3 SPLIT
PPVAR_VDDCR
C4903 C4904
*10u/6.3V_4
DNS
C132 C135 C138 C141 C144 C148 C154 C167 C187 C194
VDDCR_CPU_1 … VDDCR_CPU_21
K21 K23 K25 K27 K29 K31 N21 N23 N25 N27 N29 N31 U23 U25 U27 U29 U31 AA25 AA27 AA29 AA31
29A
PPVAR_VDDCR_FCH_A
R835
0_5%_6
PPVAR_VDDCR_FCH_A_R
C143 C147 C155 C184 C188
1000p/16V_4
VDDCR_FCH_S5_1 … VDDCR_FCH_S5_4
AR4 AR5 AR7 AU7
0.4A
PP950_A
PP950_VDDP_S5
R169
0_5%_6
C153 C168 C189
VDDP_S5_1 VDDP_S5_2 VDDP_S5_3
AJ11 AL11 AL13
0.8A
PP950_VDDP_S0
C103 C105 C107 C112 C133 C136 C140 C149 C156 C183 C185 C191
VDDP_1 … VDDP_8
AJ21 AJ23 AJ25 AJ27 AL23 AL25 AL27 AL29
7A
AM11 AM13
VDDBT_RTC_G
VDDIO_AUDIO
0.2A
C238
0.22u/10V_4
SP@AMD_SR_FT4
PP1800_VDDIO_S5
R4582
0_5%_6
PP1800_A
CH2103K1E14
CH2104K1B00
CAP CHIP 1N 25V(+-10%,X7R,0402)
VDDCR_NB_1 … VDDCR_NB_50
E9 E11 E13 E15 E17 E19 G7 J7 K11 K13 K15 K17 K19 L7 L10 L15 L17 N7 N11 N13 N15 N17 N19 R7 U7 U11 U13 U15 U17 U19 U21 W7 AA11 AA13 AA15 AA17 AA19 AA21 AA23 AE11 AE13 AE15 AE17 AE19 AE21 AE23 AE25 AE27 AE29 AE31
24A
C248 C249 C250 C251 C252
PPVAR_VDDCR_NB
C199 C206 C209 C212 C216 C217 C218 C219 C220 C221 C222 C223 C224
C4900 C4901 C4902
*10u/6.3V_4
DNS
PP1800_APU_VDDIO_S0
R154
0_5%_4
PP1800_S0
R155
0_5%_6
PP1800_VDD_18_S0
C201 C210 C214
VDD_18_1 VDD_18_2
AJ15 AL17
1.5A
PP1800_A
R156
0_5%_6
C204 C211 C215
PP1800_VDD_18_S5
VDD_18_S5_1 VDD_18_S5_2
AJ13 AL15
0.5A
PP3300_S0
R153
0_5%_6
PP3300_VDD_33_S0
C200 C207 C213
VDD_33_1 VDD_33_2
AJ19 AL21
0.2A
PP3300_VDD_33_S5
VDD_33_S5_1 VDD_33_S5_2
AJ17 AL19
0.2A
PP3300_A
R130
0_5%_6
C198 C205 C208
CLR_CMOS_L
R804
2K_1%_2
PP1800_ALW
C686
1u/10V_4
R785
10K_5%_2
Q51
PMZB290UNE
EC_CLR_CMOS
{23}
R776
100K_5%_2
Barcode1
*2D-BARCODE-8X8-S
Barcode2
*2D-BARCODE-8X8-S
HOLE1 *H-ZAD-1
HOLE2 H-C236D142P2
HOLE3 H-C236D142P2
HOLE4 *H-ZAD-2
HOLE9 *H-ZAD-7
HOLE10 *spad-re236x98np
HOLE11 *spad-re236x98np
HOLE12 *spad-re354x280np
HOLE5 *h-zad-8
HOLE6 *H-ZAD-6
HOLE7 *H-ZAD-3
HOLE8 *SPAD-C315NP
HOLE13 *SPAD-C315NP
{31} PP950_VDDP_S5
{7,31,33} PP950_VDDP_S0

Vinafix.com

Quanta Computer Inc.

PROJECT : GRUNT

Size	Document Number	Rev
	FT4 PWR	2A

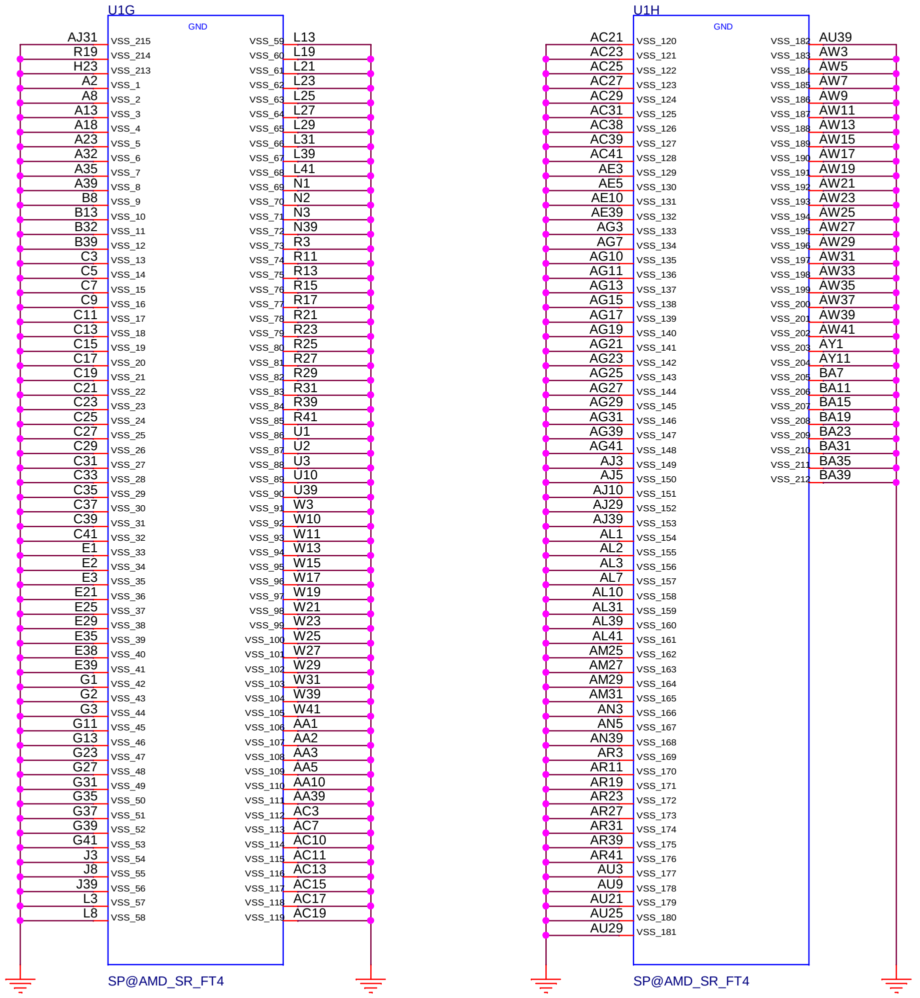
U1G
GND
AJ31 VSS_215
R19 VSS_214
H23 VSS_213
A2 VSS_1
A8 VSS_2
A13 VSS_3
A18 VSS_4
A23 VSS_5
A32 VSS_6
A35 VSS_7
A39 VSS_8
B8 VSS_9
B13 VSS_10
B32 VSS_11
B39 VSS_12
C3 VSS_13
C5 VSS_14
C7 VSS_15
C9 VSS_16
C11 VSS_17
C13 VSS_18
C15 VSS_19
C17 VSS_20
C19 VSS_21
C21 VSS_22
C23 VSS_23
C25 VSS_24
C27 VSS_25
C29 VSS_26
C31 VSS_27
C33 VSS_28
C35 VSS_29
C37 VSS_30
C39 VSS_31
C41 VSS_32
E1 VSS_33
E2 VSS_34
E3 VSS_35
E21 VSS_36
E25 VSS_37
E29 VSS_38
E35 VSS_39
E38 VSS_40
E39 VSS_41
G1 VSS_42
G2 VSS_43
G3 VSS_44
G11 VSS_45
G13 VSS_46
G23 VSS_47
G27 VSS_48
G31 VSS_49
G35 VSS_50
G37 VSS_51
G39 VSS_52
G41 VSS_53
J3 VSS_54
J8 VSS_55
J39 VSS_56
L3 VSS_57
L8 VSS_58
VSS_59 L13
VSS_60 L19
VSS_61 L21
VSS_62 L23
VSS_63 L25
VSS_64 L27
VSS_65 L29
VSS_66 L31
VSS_67 L39
VSS_68 L41
VSS_69 N1
VSS_70 N2
VSS_71 N3
VSS_72 N39
VSS_73 R3
VSS_74 R11
VSS_75 R13
VSS_76 R15
VSS_77 R17
VSS_78 R21
VSS_79 R23
VSS_80 R25
VSS_81 R27
VSS_82 R29
VSS_83 R31
VSS_84 R39
VSS_85 R41
VSS_86 U1
VSS_87 U2
VSS_88 U3
VSS_89 U10
VSS_90 U39
VSS_91 W3
VSS_92 W10
VSS_93 W11
VSS_94 W13
VSS_95 W15
VSS_96 W17
VSS_97 W19
VSS_98 W21
VSS_99 W23
VSS_100 W25
VSS_101 W27
VSS_102 W29
VSS_103 W31
VSS_104 W39
VSS_105 W41
VSS_106 AA1
VSS_107 AA2
VSS_108 AA3
VSS_109 AA5
VSS_110 AA10
VSS_111 AA39
VSS_112 AC3
VSS_113 AC7
VSS_114 AC10
VSS_115 AC11
VSS_116 AC13
VSS_117 AC15
VSS_118 AC17
VSS_119 AC19
SP@AMD_SR_FT4
U1H
GND
AC21 VSS_120
AC23 VSS_121
AC25 VSS_122
AC27 VSS_123
AC29 VSS_124
AC31 VSS_125
AC38 VSS_126
AC39 VSS_127
AC41 VSS_128
AE3 VSS_129
AE5 VSS_130
AE10 VSS_131
AE39 VSS_132
AG3 VSS_133
AG7 VSS_134
AG10 VSS_135
AG11 VSS_136
AG13 VSS_137
AG15 VSS_138
AG17 VSS_139
AG19 VSS_140
AG21 VSS_141
AG23 VSS_142
AG25 VSS_143
AG27 VSS_144
AG29 VSS_145
AG31 VSS_146
AG39 VSS_147
AG41 VSS_148
AJ3 VSS_149
AJ5 VSS_150
AJ10 VSS_151
AJ29 VSS_152
AJ39 VSS_153
AL1 VSS_154
AL2 VSS_155
AL3 VSS_156
AL7 VSS_157
AL10 VSS_158
AL31 VSS_159
AL39 VSS_160
AL41 VSS_161
AM25 VSS_162
AM27 VSS_163
AM29 VSS_164
AM31 VSS_165
AN3 VSS_166
AN5 VSS_167
AN39 VSS_168
AR3 VSS_169
AR11 VSS_170
AR19 VSS_171
AR23 VSS_172
AR27 VSS_173
AR31 VSS_174
AR39 VSS_175
AR41 VSS_176
AU3 VSS_177
AU9 VSS_178
AU21 VSS_179
AU25 VSS_180
AU29 VSS_181
VSS_182 AU39
VSS_183 AW3
VSS_184 AW5
VSS_185 AW7
VSS_186 AW9
VSS_187 AW11
VSS_188 AW13
VSS_189 AW15
VSS_190 AW17
VSS_191 AW19
VSS_192 AW21
VSS_193 AW23
VSS_194 AW25
VSS_195 AW27
VSS_196 AW29
VSS_197 AW31
VSS_198 AW33
VSS_199 AW35
VSS_200 AW37
VSS_201 AW39
VSS_202 AW41
VSS_203 AY1
VSS_204 AY11
VSS_205 BA7
VSS_206 BA11
VSS_207 BA15
VSS_208 BA19
VSS_209 BA23
VSS_210 BA31
VSS_211 BA35
VSS_212 BA39
SP@AMD_SR_FT4

Quanta Computer Inc.

PROJECT : GRUNT

Size
Document Number
FT4 GND
Rev
2A

Date: Wednesday, November 14, 2018
Sheet 12 of 35

On board memory(OBM)

12

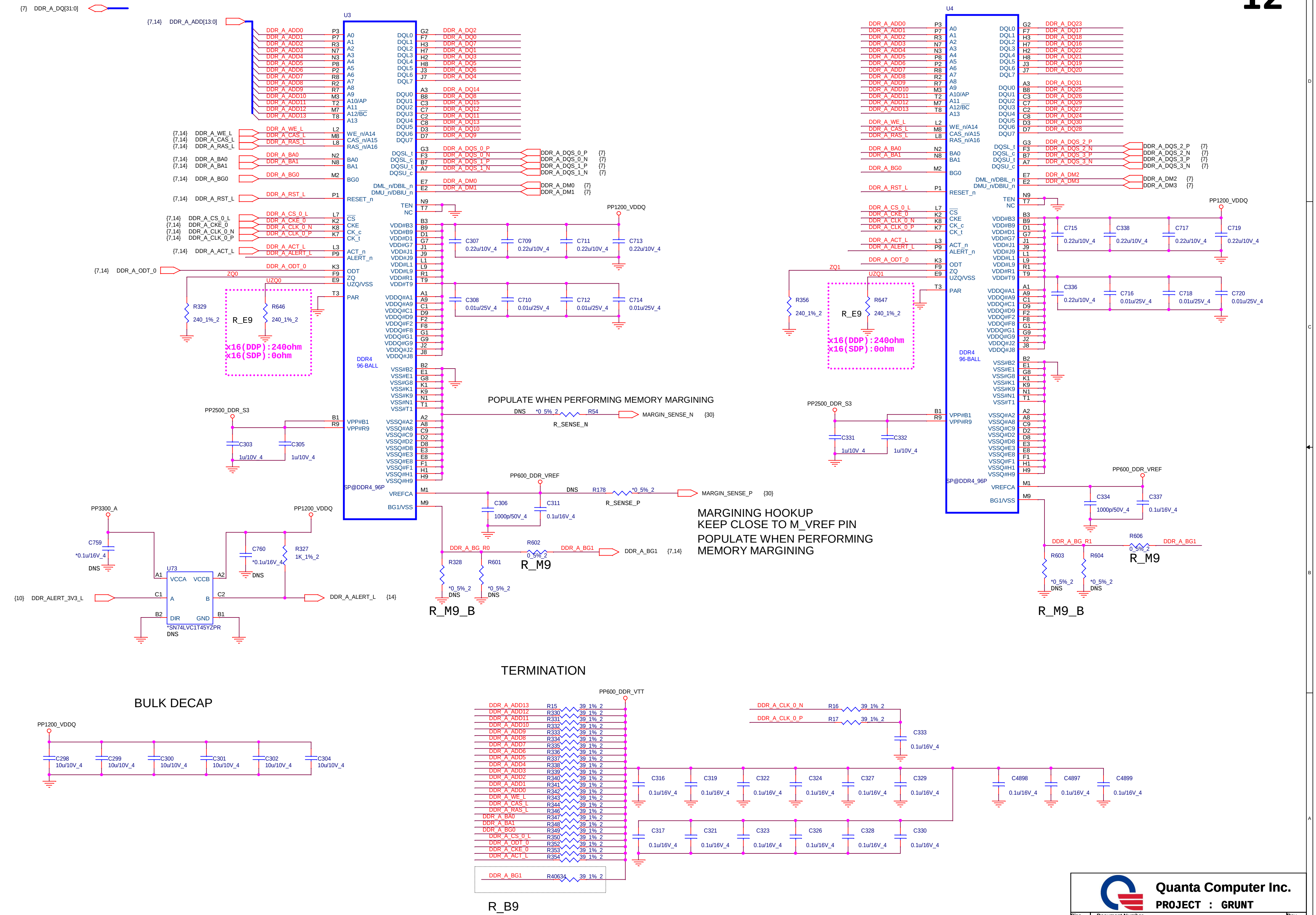
{7} DDR_A_DQ[31:0]
{7,14} DDR_A_ADD[13:0]
U3
U4
DDR4 96-BALL
SP@DDR4_96P
PP1200_VDDQ
PP2500_DDR_S3
PP600_DDR_VREF
PP3300_A
PP600_DDR_VTT
R_E9
x16(DDP):240ohm
x16(SDP):0ohm
R329 240_1%_2
R646 240_1%_2
R356 240_1%_2
R647 240_1%_2
C307 0.22u/10V_4
C709 0.22u/10V_4
C711 0.22u/10V_4
C713 0.22u/10V_4
C308 0.01u/25V_4
C710 0.01u/25V_4
C712 0.01u/25V_4
C714 0.01u/25V_4
C715 0.22u/10V_4
C338 0.22u/10V_4
C717 0.22u/10V_4
C719 0.22u/10V_4
C336 0.22u/10V_4
C716 0.01u/25V_4
C718 0.01u/25V_4
C720 0.01u/25V_4
C303 1u/10V_4
C305 1u/10V_4
C331 1u/10V_4
C332 1u/10V_4
POPULATE WHEN PERFORMING MEMORY MARGINING
DNS *0_5%_2 R54 MARGIN_SENSE_N {30}
R_SENSE_N
DNS R178 *0_5%_2 MARGIN_SENSE_P {30}
R_SENSE_P
C306 1000p/50V_4
C311 0.1u/16V_4
C334 1000p/50V_4
C337 0.1u/16V_4
MARGINING HOOKUP
KEEP CLOSE TO M_VREF PIN
POPULATE WHEN PERFORMING
MEMORY MARGINING
DDR_A_BG_R0
R602 0_5%_2
DDR_A_BG1 {7,14}
R_M9
R328 *0_5%_2 DNS
R601 *0_5%_2 DNS
R_M9_B
DDR_A_BG_R1
R606 0_5%_2
R603 *0_5%_2 DNS
R604 *0_5%_2 DNS
C759 *0.1u/16V_4 DNS
C760 *0.1u/16V_4 DNS
R327 1K_1%_2
U73
*SN74LVC1T45YZPR
DNS
{10} DDR_ALERT_3V3_L
DDR_A_ALERT_L {14}
TERMINATION
R15 – R354 39_1%_2
R40634 39_1%_2
R_B9
DDR_A_CLK_0_N R16 39_1%_2
DDR_A_CLK_0_P R17 39_1%_2
C333 0.1u/16V_4
C316 C319 C322 C324 C327 C329 C4898 C4897 C4899 0.1u/16V_4
C317 C321 C323 C326 C328 C330 0.1u/16V_4
BULK DECAP
PP1200_VDDQ
C298 C299 C300 C301 C302 C304 10u/10V_4

Quanta Computer Inc.

PROJECT : GRUNT

Size	Document Number	Rev
	DDR4 CH00/01	2A

Date: Wednesday, November 14, 2018 Sheet 13 of 35

On board memory(OBM)

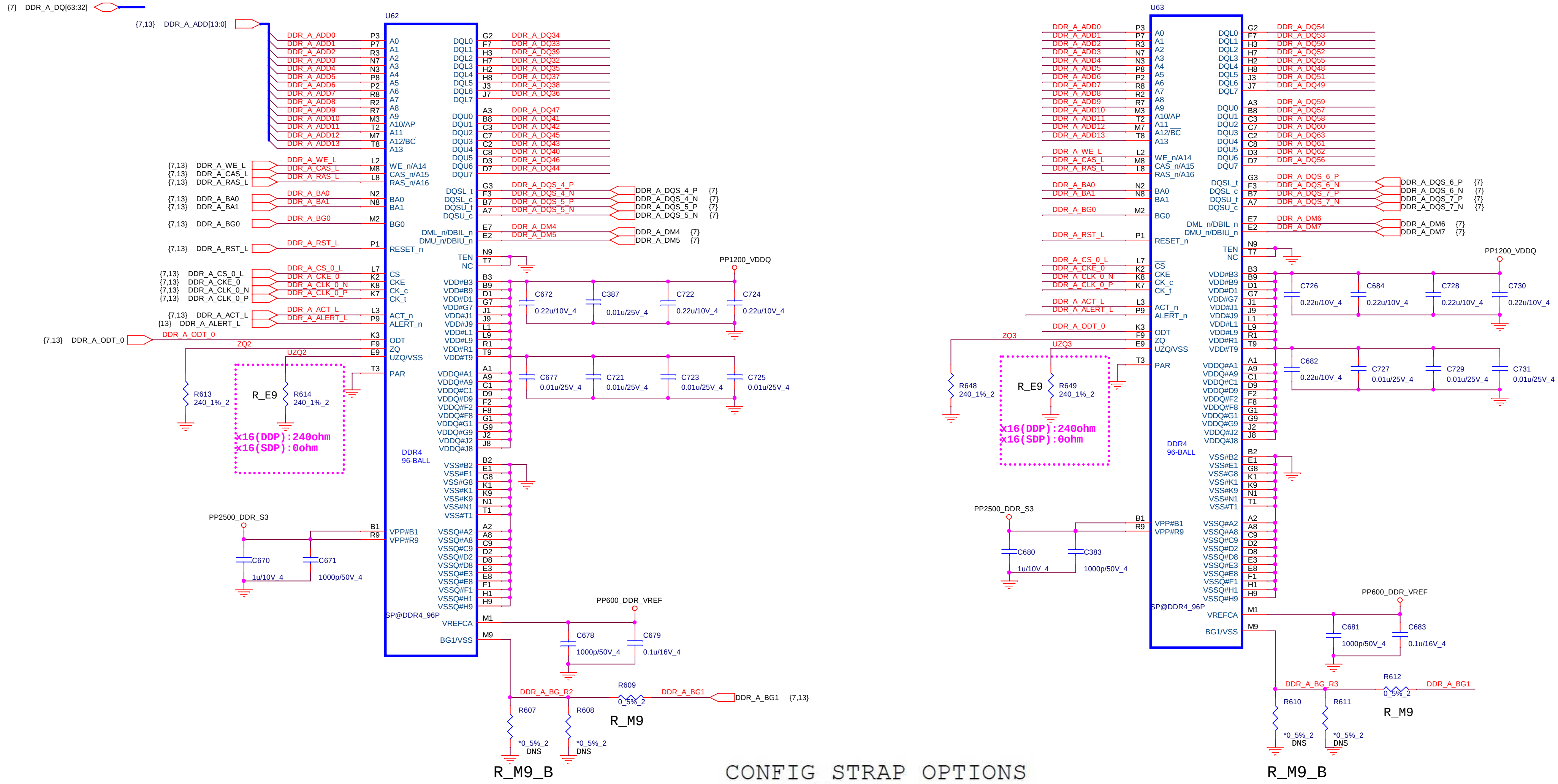
{7} DDR_A_DQ[63:32]
{7,13} DDR_A_ADD[13:0]
U62
U63
DDR_A_ADD0 … DDR_A_ADD13
A0 … A13, A10/AP, A12/BC
DQL0 … DQL7, DQU0 … DQU7
DDR_A_DQ32 … DDR_A_DQ63
WE_n/A14
CAS_n/A15
RAS_n/A16
{7,13} DDR_A_WE_L
{7,13} DDR_A_CAS_L
{7,13} DDR_A_RAS_L
{7,13} DDR_A_BA0
{7,13} DDR_A_BA1
{7,13} DDR_A_BG0
{7,13} DDR_A_RST_L
{7,13} DDR_A_CS_0_L
{7,13} DDR_A_CKE_0
{7,13} DDR_A_CLK_0_N
{7,13} DDR_A_CLK_0_P
{7,13} DDR_A_ACT_L
{13} DDR_A_ALERT_L
{7,13} DDR_A_ODT_0
BA0
BA1
BG0
RESET_n
CS
CKE
CK_c
CK_t
ACT_n
ALERT_n
ODT
ZQ
UZQ/VSS
PAR
DQSL_t
DQSL_c
DQSU_t
DQSU_c
DML_n/DBIL_n
DMU_n/DBIU_n
DDR_A_DQS_4_P {7}
DDR_A_DQS_4_N {7}
DDR_A_DQS_5_P {7}
DDR_A_DQS_5_N {7}
DDR_A_DM4 {7}
DDR_A_DM5 {7}
DDR_A_DQS_6_P {7}
DDR_A_DQS_6_N {7}
DDR_A_DQS_7_P {7}
DDR_A_DQS_7_N {7}
DDR_A_DM6 {7}
DDR_A_DM7 {7}
TEN
NC
VDD#B3 … VDD#T9
VDDQ#A1 … VDDQ#J8
VSS#B2 … VSS#T1
VSSQ#A2 … VSSQ#H9
VPP#B1
VPP#R9
VREFCA
BG1/VSS
DDR4
96-BALL
SP@DDR4_96P
PP1200_VDDQ
PP2500_DDR_S3
PP600_DDR_VREF
C672 0.22u/10V_4
C387 0.01u/25V_4
C722 0.22u/10V_4
C724 0.22u/10V_4
C677 0.01u/25V_4
C721 0.01u/25V_4
C723 0.01u/25V_4
C725 0.01u/25V_4
C670 1u/10V_4
C671 1000p/50V_4
C678 1000p/50V_4
C679 0.1u/16V_4
C726 0.22u/10V_4
C684 0.22u/10V_4
C728 0.22u/10V_4
C730 0.22u/10V_4
C682 0.22u/10V_4
C727 0.01u/25V_4
C729 0.01u/25V_4
C731 0.01u/25V_4
C680 1u/10V_4
C383 1000p/50V_4
C681 1000p/50V_4
C683 0.1u/16V_4
ZQ2
UZQ2
ZQ3
UZQ3
R613 240_1%_2
R614 240_1%_2
R648 240_1%_2
R649 240_1%_2
R_E9
x16(DDP):240ohm
x16(SDP):0ohm
DDR_A_BG_R2
DDR_A_BG_R3
DDR_A_BG1
DDR_A_BG1 {7,13}
R607 *0_5%_2 DNS
R608 *0_5%_2 DNS
R609 0_5%_2
R610 *0_5%_2 DNS
R611 *0_5%_2 DNS
R612 0_5%_2
R_M9
R_M9_B

CONFIG_STRAP OPTIONS

CONFIG_STRAP	4	3	2	1	DDR4 IC	DDR4 P/N
	0	0	0	0	HYNIX 8GBIT	H5AN8G6NAFR-UHC
	0	0	0	1	HYNIX 16GBIT DDP	H5ANAG6NAMR-UHC
	0	0	1	0	MICRON 8GBIT	MT40A512M16JY-083E
	0	0	1	1	MICRON 16GBIT DDP	MT40A1G16KNR-075E
	0	1	0	0	SAMSUNG 8GBIT	K4A8G165WB-BCRC
	0	1	0	1	SAMSUNG 16GBIT DDP	K4AAG165WB-MCRC
	0	1	1	0		
	0	1	1	1		
	1	0	0	0		
	1	0	0	1		
	1	0	1	0		
	1	0	1	1		
	1	1	0	0		
	1	1	0	1		
	1	1	1	0		
	1	1	1	1		

SDP = 4GB

DDP = 8GB

SDP VS. DDP DRR4 STUFF OPTIONS

	SDP	DDP
R_E9	0 OHM	240 OHM
R_M9	OPEN	0 OHM
R_M9_B	0 OHM	OPEN
R_B9	OPEN	39 OHM

Quanta Computer Inc.
PROJECT : GRUNT

Size	Document Number	Rev
	DDR4 CH00/11	2A

Date: Wednesday, November 14, 2018 Sheet 14 of 35

14

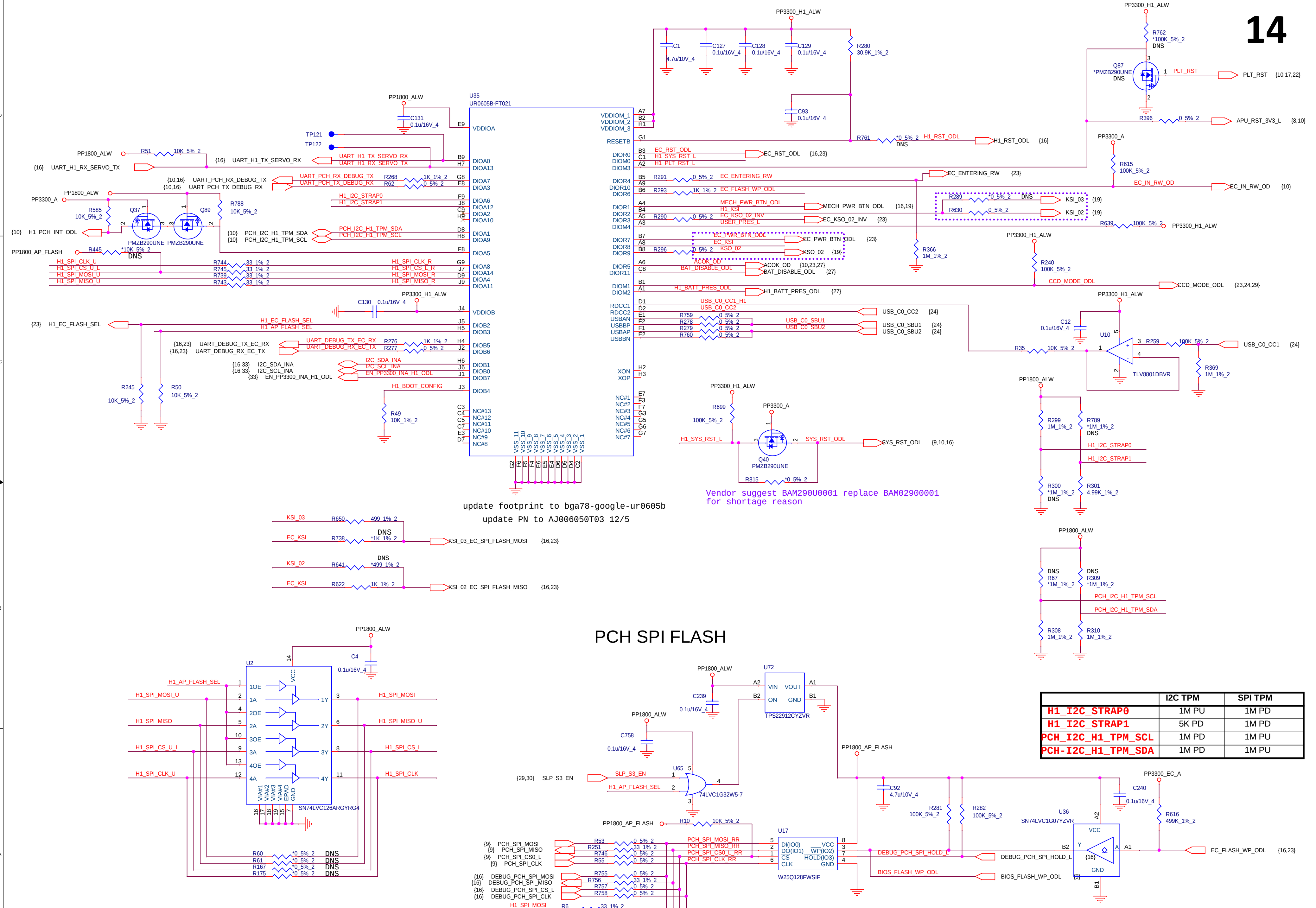

update footprint to bga78-google-ur0605b

update PN to AJ006050T03 12/5

Vendor suggest BAM290U0001 replace BAM02900001
for shortage reason

PCH SPI FLASH

	I2C TPM	SPI TPM
H1_I2C_STRAP0	1M PU	1M PD
H1_I2C_STRAP1	5K PD	1M PD
PCH_I2C_H1_TPM_SCL	1M PD	1M PU
PCH-I2C_H1_TPM_SDA	1M PD	1M PU

Quanta Computer Inc.

PROJECT : GRUNT

Size Document Number Rev 2A

SPI ROM, H1

Date: Wednesday, November 14, 2018 Sheet 15 of 35

SPI SERIES RESISTORS

SERVO HEADER

Place EC, PCH SPI FLASH, and SERVO as close as possible
MP_DNS

INA LEAKAGE PROTECTION

THIS SECTION IS MP_DNS

EC POWER FOR FLASHING

THIS SECTION IS MP_DNS

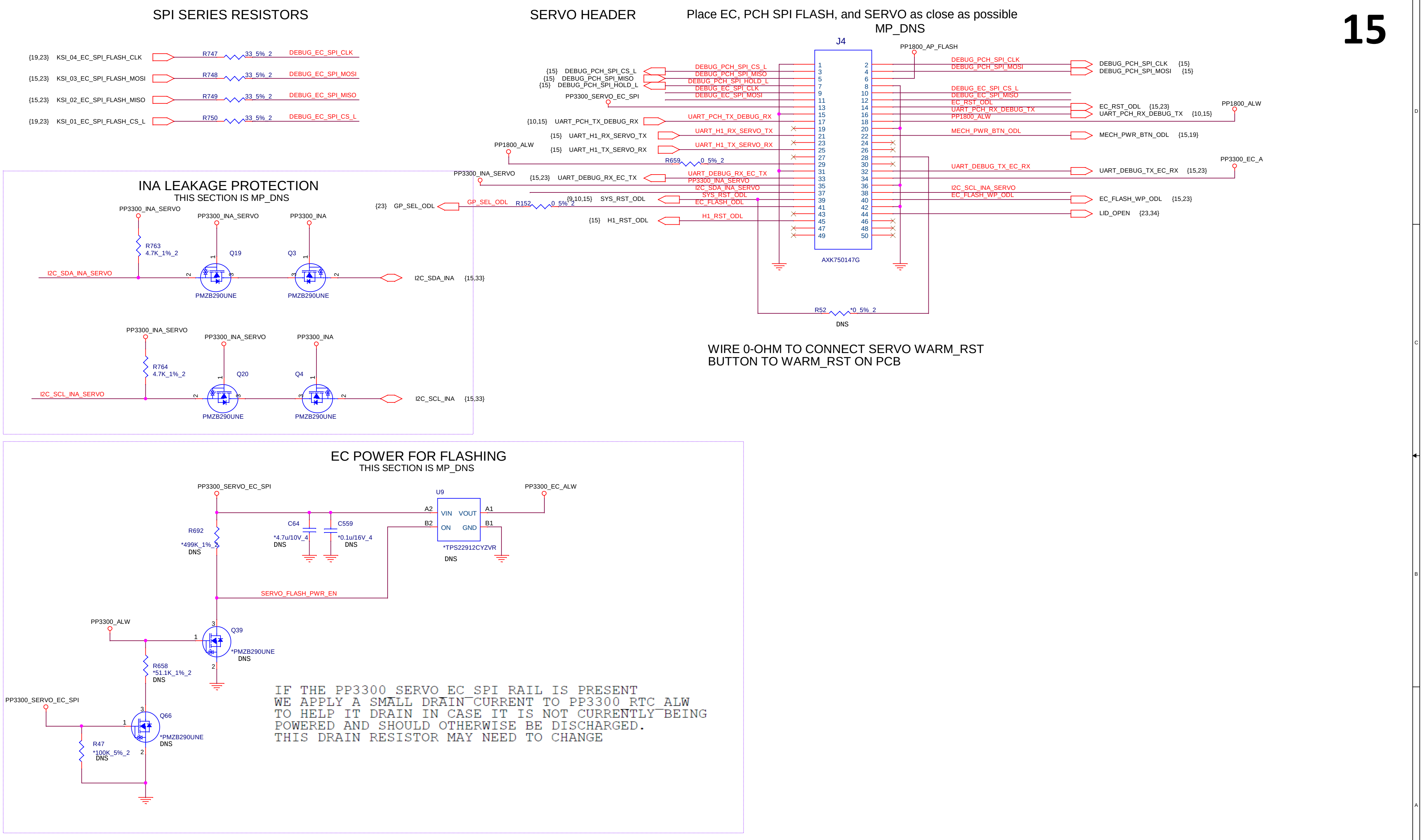
{19,23} KSI_04_EC_SPI_FLASH_CLK
R747 33_5%_2 DEBUG_EC_SPI_CLK
{15,23} KSI_03_EC_SPI_FLASH_MOSI
R748 33_5%_2 DEBUG_EC_SPI_MOSI
{15,23} KSI_02_EC_SPI_FLASH_MISO
R749 33_5%_2 DEBUG_EC_SPI_MISO
{19,23} KSI_01_EC_SPI_FLASH_CS_L
R750 33_5%_2 DEBUG_EC_SPI_CS_L
J4
AXK750147G
PP1800_AP_FLASH
{15} DEBUG_PCH_SPI_CS_L
{15} DEBUG_PCH_SPI_MISO
{15} DEBUG_PCH_SPI_HOLD_L
PP3300_SERVO_EC_SPI
DEBUG_PCH_SPI_CS_L
DEBUG_PCH_SPI_MISO
DEBUG_PCH_SPI_HOLD_L
DEBUG_EC_SPI_CLK
DEBUG_EC_SPI_MOSI
{10,15} UART_PCH_TX_DEBUG_RX
UART_PCH_TX_DEBUG_RX
{15} UART_H1_RX_SERVO_TX
UART_H1_RX_SERVO_TX
{15} UART_H1_TX_SERVO_RX
UART_H1_TX_SERVO_RX
PP1800_ALW
R659 0_5%_2
PP3300_INA_SERVO
{15,23} UART_DEBUG_RX_EC_TX
UART_DEBUG_RX_EC_TX
PP3300_INA_SERVO
I2C_SDA_INA_SERVO
{9,10,15} SYS_RST_ODL
SYS_RST_ODL
{23} GP_SEL_ODL
GP_SEL_ODL R152 0_5%_2
EC_FLASH_ODL
{15} H1_RST_ODL
H1_RST_ODL
1 3 5 7 9 11 13 15 17 19 21 23 25 27 29 31 33 35 37 39 41 43 45 47 49
2 4 6 8 10 12 14 16 18 20 22 24 26 28 30 32 34 36 38 40 42 44 46 48 50
DEBUG_PCH_SPI_CLK
DEBUG_PCH_SPI_MOSI
DEBUG_PCH_SPI_CLK {15}
DEBUG_PCH_SPI_MOSI {15}
DEBUG_EC_SPI_CS_L
DEBUG_EC_SPI_MISO
EC_RST_ODL
UART_PCH_RX_DEBUG_TX
PP1800_ALW
EC_RST_ODL {15,23}
UART_PCH_RX_DEBUG_TX {10,15}
PP1800_ALW
MECH_PWR_BTN_ODL
MECH_PWR_BTN_ODL {15,19}
PP3300_EC_A
UART_DEBUG_TX_EC_RX
UART_DEBUG_TX_EC_RX {15,23}
I2C_SCL_INA_SERVO
EC_FLASH_WP_ODL
EC_FLASH_WP_ODL {15,23}
LID_OPEN {23,34}
R52 *0_5%_2
DNS
PP3300_INA_SERVO
R763 4.7K_1%_2
PP3300_INA_SERVO
Q19
PP3300_INA
Q3
I2C_SDA_INA_SERVO
PMZB290UNE
PMZB290UNE
I2C_SDA_INA {15,33}
PP3300_INA_SERVO
R764 4.7K_1%_2
PP3300_INA_SERVO
Q20
PP3300_INA
Q4
I2C_SCL_INA_SERVO
PMZB290UNE
PMZB290UNE
I2C_SCL_INA {15,33}
PP3300_SERVO_EC_SPI
PP3300_EC_ALW
U9
A2 VIN VOUT A1
B2 ON GND B1
*TPS22912CYZVR
DNS
R692
*499K_1%_2
DNS
C64
*4.7u/10V_4
DNS
C559
*0.1u/16V_4
DNS
SERVO_FLASH_PWR_EN
PP3300_ALW
Q39
*PMZB290UNE
DNS
R658
*51.1K_1%_2
DNS
PP3300_SERVO_EC_SPI
Q66
*PMZB290UNE
DNS
R47
*100K_5%_2
DNS

WIRE 0-OHM TO CONNECT SERVO WARM_RST
BUTTON TO WARM_RST ON PCB

IF THE PP3300_SERVO_EC_SPI RAIL IS PRESENT
WE APPLY A SMALL DRAIN CURRENT TO PP3300_RTC_ALW
TO HELP IT DRAIN IN CASE IT IS NOT CURRENTLY BEING
POWERED AND SHOULD OTHERWISE BE DISCHARGED.
THIS DRAIN RESISTOR MAY NEED TO CHANGE

Quanta Computer Inc.

PROJECT : GRUNT

Size	Document Number	Rev
	SERVO DEBUG	2A

Date: Wednesday, November 14, 2018 Sheet 16 of 35

32 GB EMMC STORAGE

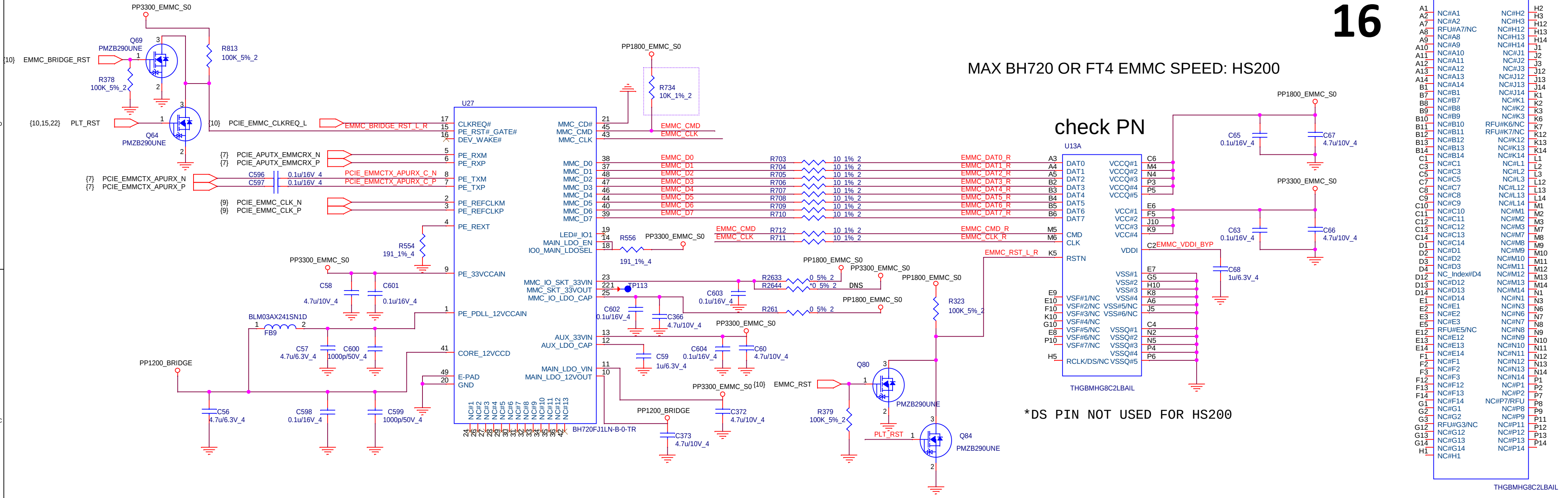
16
MAX BH720 OR FT4 EMMC SPEED: HS200
check PN
*DS PIN NOT USED FOR HS200
PP3300_EMMC_S0
PP1800_EMMC_S0
PP1200_BRIDGE
Q69 PMZB290UNE
Q64 PMZB290UNE
Q80 PMZB290UNE
Q84 PMZB290UNE
R813 100K_5%_2
R378 100K_5%_2
R734 10K_1%_2
{10} EMMC_BRIDGE_RST
{10,15,22} PLT_RST
{10} PCIE_EMMC_CLKREQ_L
EMMC_BRIDGE_RST_L_R
{7} PCIE_APUTX_EMMCRX_N
{7} PCIE_APUTX_EMMCRX_P
{7} PCIE_EMMCTX_APURX_N
{7} PCIE_EMMCTX_APURX_P
C596 0.1u/16V_4
C597 0.1u/16V_4
PCIE_EMMCTX_APURX_C_N
PCIE_EMMCTX_APURX_C_P
{9} PCIE_EMMC_CLK_N
{9} PCIE_EMMC_CLK_P
R554 191_1%_4
U27
CLKREQ#
PE_RST#_GATE#
DEV_WAKE#
PE_RXM
PE_RXP
PE_TXM
PE_TXP
PE_REFCLKM
PE_REFCLKP
PE_REXT
PE_33VCCAIN
PE_PDLL_12VCCAIN
CORE_12VCCD
E-PAD
GND
MMC_CD#
MMC_CMD
MMC_CLK
MMC_D0
MMC_D1
MMC_D2
MMC_D3
MMC_D4
MMC_D5
MMC_D6
MMC_D7
LED#_IO1
MAIN_LDO_EN
IO0_MAIN_LDOSEL
MMC_IO_SKT_33VIN
MMC_SKT_33VOUT
MMC_IO_LDO_CAP
AUX_33VIN
AUX_LDO_CAP
MAIN_LDO_VIN
MAIN_LDO_12VOUT
NC#1 NC#2 NC#3 NC#4 NC#5 NC#6 NC#7 NC#8 NC#9 NC#10 NC#11 NC#12 NC#13
BH720FJ1LN-B-0-TR
C58 4.7u/10V_4
C601 0.1u/16V_4
BLM03AX241SN1D FB9
C57 4.7u/6.3V_4
C600 1000p/50V_4
C56 4.7u/6.3V_4
C598 0.1u/16V_4
C599 1000p/50V_4
R556 191_1%_4
TP113
C602 0.1u/16V_4
C366 4.7u/10V_4
C603 0.1u/16V_4
R2633 0_5%_2
R2644 *0_5%_2 DNS
R261 0_5%_2
C59 1u/6.3V_4
C604 0.1u/16V_4
C60 4.7u/10V_4
C372 4.7u/10V_4
C373 4.7u/10V_4
EMMC_CMD
EMMC_CLK
EMMC_D0 EMMC_D1 EMMC_D2 EMMC_D3 EMMC_D4 EMMC_D5 EMMC_D6 EMMC_D7
R703 R704 R705 R706 R707 R708 R709 R710 10_1%_2
R712 R711 10_1%_2
EMMC_DAT0_R EMMC_DAT1_R EMMC_DAT2_R EMMC_DAT3_R EMMC_DAT4_R EMMC_DAT5_R EMMC_DAT6_R EMMC_DAT7_R
EMMC_CMD_R
EMMC_CLK_R
EMMC_RST_L_R
{10} EMMC_RST
R323 100K_5%_2
R379 100K_5%_2
PLT_RST
U13A
DAT0 DAT1 DAT2 DAT3 DAT4 DAT5 DAT6 DAT7
CMD
CLK
RSTN
VCCQ#1 VCCQ#2 VCCQ#3 VCCQ#4 VCCQ#5
VCC#1 VCC#2 VCC#3 VCC#4
VDDI
VSS#1 VSS#2 VSS#3 VSS#4 VSS#5/NC VSS#6/NC
VSSQ#1 VSSQ#2 VSSQ#3 VSSQ#4 VSSQ#5
VSF#1/NC VSF#2/NC VSF#3/NC VSF#4/NC VSF#5/NC VSF#6/NC VSF#7/NC
RCLK/DS/NC
THGBMHG8C2LBAIL
C65 0.1u/16V_4
C67 4.7u/10V_4
C63 0.1u/16V_4
C66 4.7u/10V_4
C68 1u/6.3V_4
EMMC_VDDI_BYP
U13B
THGBMHG8C2LBAIL

MICRO SD CARD

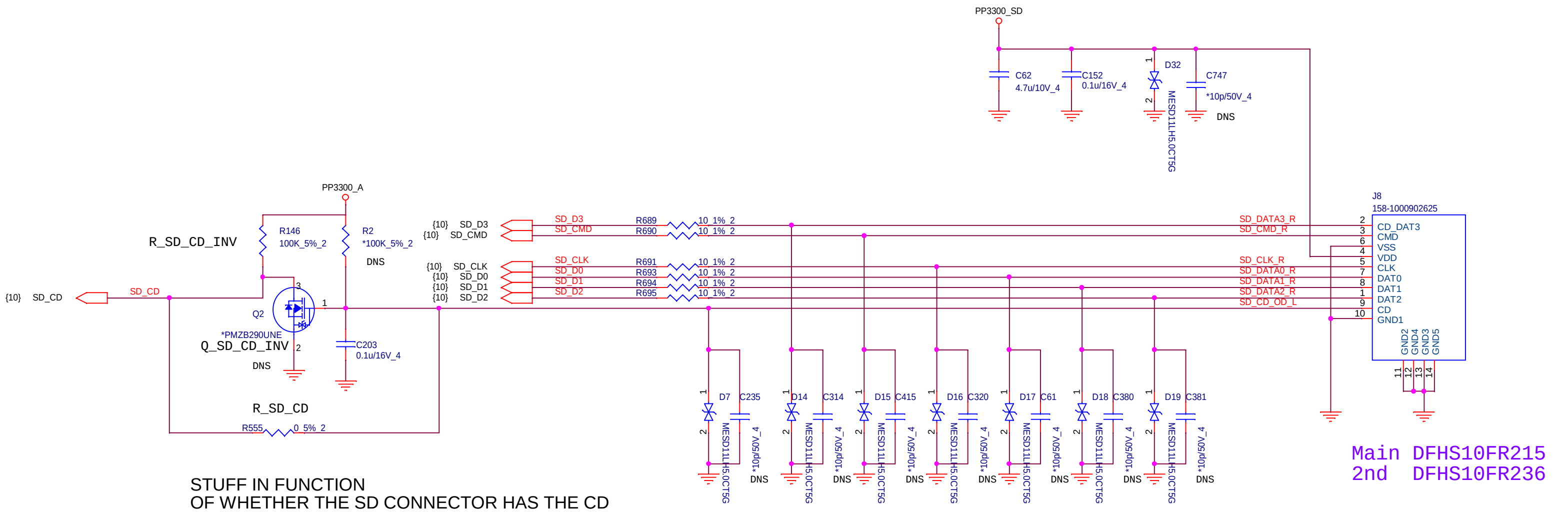
PP3300_SD
C62 4.7u/10V_4
C152 0.1u/16V_4
D32 MESD11LH5.0CT5G
C747 *10p/50V_4 DNS
PP3300_A
R_SD_CD_INV
R146 100K_5%_2
R2 *100K_5%_2 DNS
{10} SD_CD
SD_CD
Q2 *PMZB290UNE
Q_SD_CD_INV
DNS
C203 0.1u/16V_4
R_SD_CD
R555 0_5%_2
{10} SD_D3
{10} SD_CMD
{10} SD_CLK
{10} SD_D0
{10} SD_D1
{10} SD_D2
R689 R690 R691 R693 R694 R695 10_1%_2
SD_DATA3_R SD_CMD_R SD_CLK_R SD_DATA0_R SD_DATA1_R SD_DATA2_R SD_CD_OD_L
J8 158-1000902625
CD_DAT3 CMD VSS VDD CLK DAT0 DAT1 DAT2 CD GND1
GND2 GND4 GND3 GND5
D7 D14 D15 D16 D17 D18 D19 MESD11LH5.0CT5G
C235 C314 C415 C320 C61 C380 C381 *10p/50V_4 DNS
Main DFHS10FR215
2nd DFHS10FR236

STUFF IN FUNCTION
OF WHETHER THE SD CONNECTOR HAS THE CD
SIGNAL ACTIVE HIGH OR ACTIVE LOW

FT4 EXPECT AN ACTIVE LOW SIGNAL ON CONNECTION
TO INVERT SD_CD: DNS R_SD_CD
TO PRESERVE SD_CD: DNS R_SD_CD_INV AND DNS Q_SD_CD_INV

Quanta Computer Inc.
PROJECT : GRUNT

Size	Document Number	Rev
	eMMC/SD	2A
Date: Wednesday, November 14, 2018	Sheet 17 of 35	

17

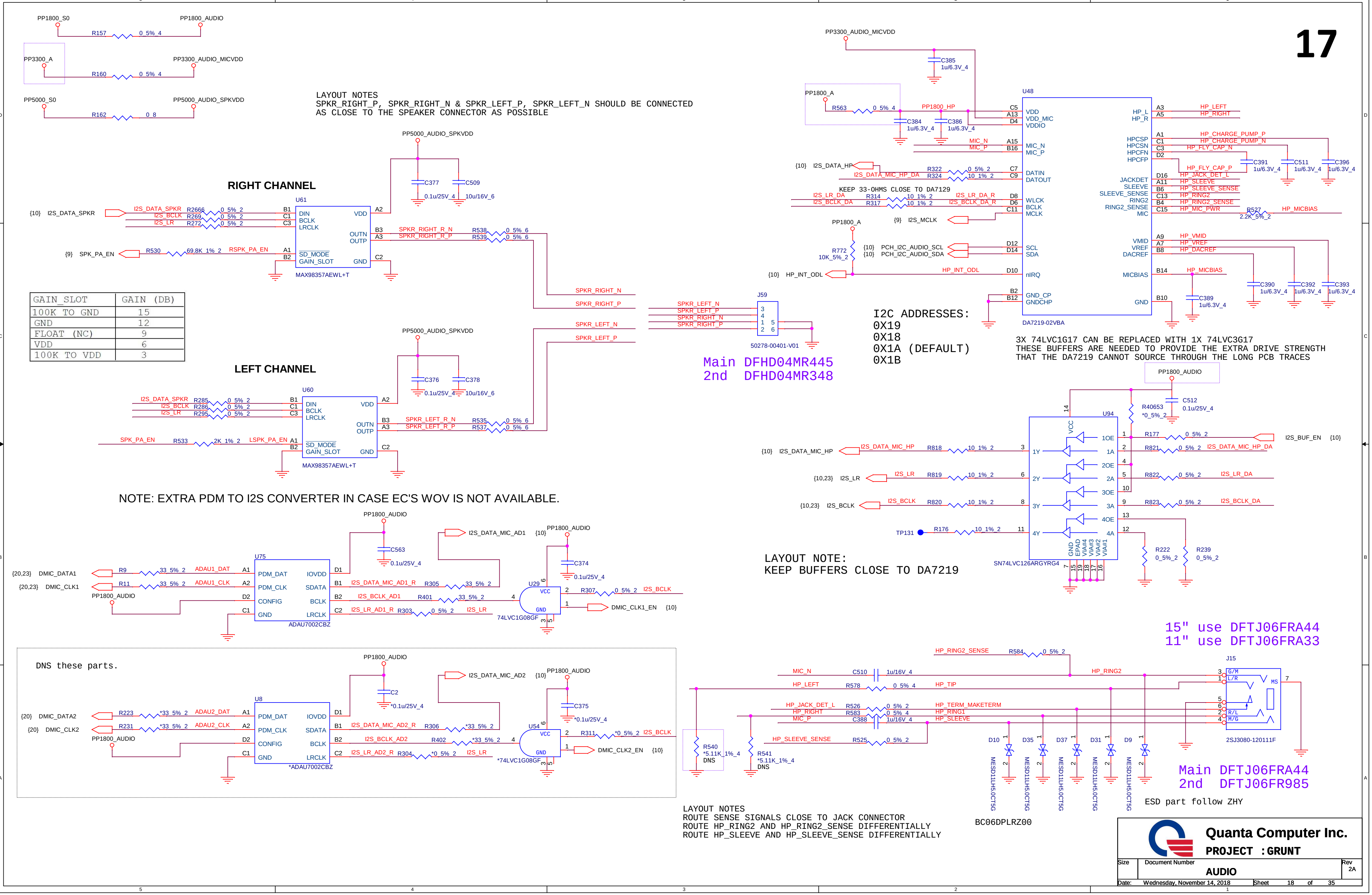
PP1800_S0
PP1800_AUDIO
R157 0_5%_4
PP3300_A
PP3300_AUDIO_MICVDD
R160 0_5%_4
PP5000_S0
PP5000_AUDIO_SPKVDD
R162 0_8
RIGHT CHANNEL
U61
MAX98357AEWL+T
C377 0.1u/25V_4
C509 10u/16V_6
{10} I2S_DATA_SPKR
R2666 0_5%_2
R269 0_5%_2
R272 0_5%_2
{9} SPK_PA_EN
R530 69.8K_1%_2
RSPK_PA_EN
SPKR_RIGHT_R_N
SPKR_RIGHT_R_P
R538 0_5%_6
R539 0_5%_6
LEFT CHANNEL
U60
MAX98357AEWL+T
C376 0.1u/25V_4
C378 10u/16V_6
R285 0_5%_2
R286 0_5%_2
R295 0_5%_2
R533 2K_1%_2
LSPK_PA_EN
SPKR_LEFT_R_N
SPKR_LEFT_R_P
R535 0_5%_6
R537 0_5%_6
J59
50278-00401-V01
U48
DA7219-02VBA
C385 1u/6.3V_4
R563 0_5%_4
PP1800_HP
C384 1u/6.3V_4
C386 1u/6.3V_4
R322 0_5%_2
R324 10_1%_2
R314 10_1%_2
R317 10_1%_2
I2S_LR_DA_R
I2S_BCLK_DA_R
{9} I2S_MCLK
R772 10K_5%_2
{10} PCH_I2C_AUDIO_SCL
{10} PCH_I2C_AUDIO_SDA
{10} HP_INT_ODL
HP_LEFT
HP_RIGHT
HP_CHARGE_PUMP_P
HP_CHARGE_PUMP_N
HP_FLY_CAP_N
HP_FLY_CAP_P
HP_JACK_DET_L
HP_SLEEVE
HP_SLEEVE_SENSE
HP_RING2
HP_RING2_SENSE
HP_MIC_PWR
R527 2.2K_5%_2
HP_MICBIAS
HP_VMID
HP_VREF
HP_DACREF
C391 1u/6.3V_4
C511 1u/6.3V_4
C396 1u/6.3V_4
C390 1u/6.3V_4
C392 1u/6.3V_4
C393 1u/6.3V_4
C389 1u/6.3V_4
U94
SN74LVC126ARGYR4
R40653 *0_5%_2
C512 0.1u/25V_4
R177 0_5%_2
I2S_BUF_EN {10}
{10} I2S_DATA_MIC_HP
R818 10_1%_2
R821 0_5%_2
I2S_DATA_MIC_HP_DA
{10,23} I2S_LR
R819 10_1%_2
R822 0_5%_2
I2S_LR_DA
{10,23} I2S_BCLK
R820 10_1%_2
R823 0_5%_2
I2S_BCLK_DA
TP131
R176 10_1%_2
R222 0_5%_2
R239 0_5%_2
U75
ADAU7002CBZ
{20,23} DMIC_DATA1
{20,23} DMIC_CLK1
R9 33_5%_2
R11 33_5%_2
ADAU1_DAT
ADAU1_CLK
C563 0.1u/25V_4
I2S_DATA_MIC_AD1 {10}
I2S_DATA_MIC_AD1_R
R305 33_5%_2
I2S_BCLK_AD1
R401 33_5%_2
I2S_LR_AD1_R
R303 0_5%_2
U29
74LVC1G08GF
C374 0.1u/25V_4
R307 0_5%_2
I2S_BCLK
DMIC_CLK1_EN {10}
U8
*ADAU7002CBZ
{20} DMIC_DATA2
{20} DMIC_CLK2
R223 *33_5%_2
R231 *33_5%_2
ADAU2_DAT
ADAU2_CLK
C2 *0.1u/25V_4
I2S_DATA_MIC_AD2 {10}
I2S_DATA_MIC_AD2_R
R306 *33_5%_2
I2S_BCLK_AD2
R402 *33_5%_2
I2S_LR_AD2_R
R304 *0_5%_2
U54
*74LVC1G08GF
C375 *0.1u/25V_4
R311 *0_5%_2
DMIC_CLK2_EN {10}
J15
2SJ3080-120111F
R584 0_5%_2
C510 1u/16V_4
R578 0_5%_4
HP_TIP
R526 0_5%_2
HP_TERM_MAKETERM
R583 0_5%_4
HP_RING1
C388 1u/16V_4
MIC_P
R525 0_5%_2
R540 *5.11K_1%_4 DNS
R541 *5.11K_1%_4 DNS
D10 D35 D37 D31 D9
MESD11LH5.0CT5G
BC06DPLRZ00

LAYOUT NOTES
SPKR_RIGHT_P, SPKR_RIGHT_N & SPKR_LEFT_P, SPKR_LEFT_N SHOULD BE CONNECTED
AS CLOSE TO THE SPEAKER CONNECTOR AS POSSIBLE

GAIN_SLOT	GAIN (DB)
100K TO GND	15
GND	12
FLOAT (NC)	9
VDD	6
100K TO VDD	3

KEEP 33-OHMS CLOSE TO DA7129

I2C ADDRESSES:
0X19
0X18
0X1A (DEFAULT)
0X1B

Main DFHD04MR445
2nd DFHD04MR348

3X 74LVC1G17 CAN BE REPLACED WITH 1X 74LVC3G17
THESE BUFFERS ARE NEEDED TO PROVIDE THE EXTRA DRIVE STRENGTH
THAT THE DA7219 CANNOT SOURCE THROUGH THE LONG PCB TRACES

NOTE: EXTRA PDM TO I2S CONVERTER IN CASE EC'S WOV IS NOT AVAILABLE.

LAYOUT NOTE:
KEEP BUFFERS CLOSE TO DA7219

DNS these parts.

15" use DFTJ06FRA44
11" use DFTJ06FRA33

Main DFTJ06FRA44
2nd DFTJ06FR985

ESD part follow ZHY

LAYOUT NOTES
ROUTE SENSE SIGNALS CLOSE TO JACK CONNECTOR
ROUTE HP_RING2 AND HP_RING2_SENSE DIFFERENTIALLY
ROUTE HP_SLEEVE AND HP_SLEEVE_SENSE DIFFERENTIALLY

Quanta Computer Inc.
PROJECT :GRUNT

Size	Document Number	Rev
	AUDIO	2A

Date: Wednesday, November 14, 2018 Sheet 18 of 35

AMBIENT TEMPERATURE SENSOR SHOULD BE PLACED NEAR HEADPHONE JACK, AWAY FROM ICS
DO NOT CHANGE THERMISTOR TYPE

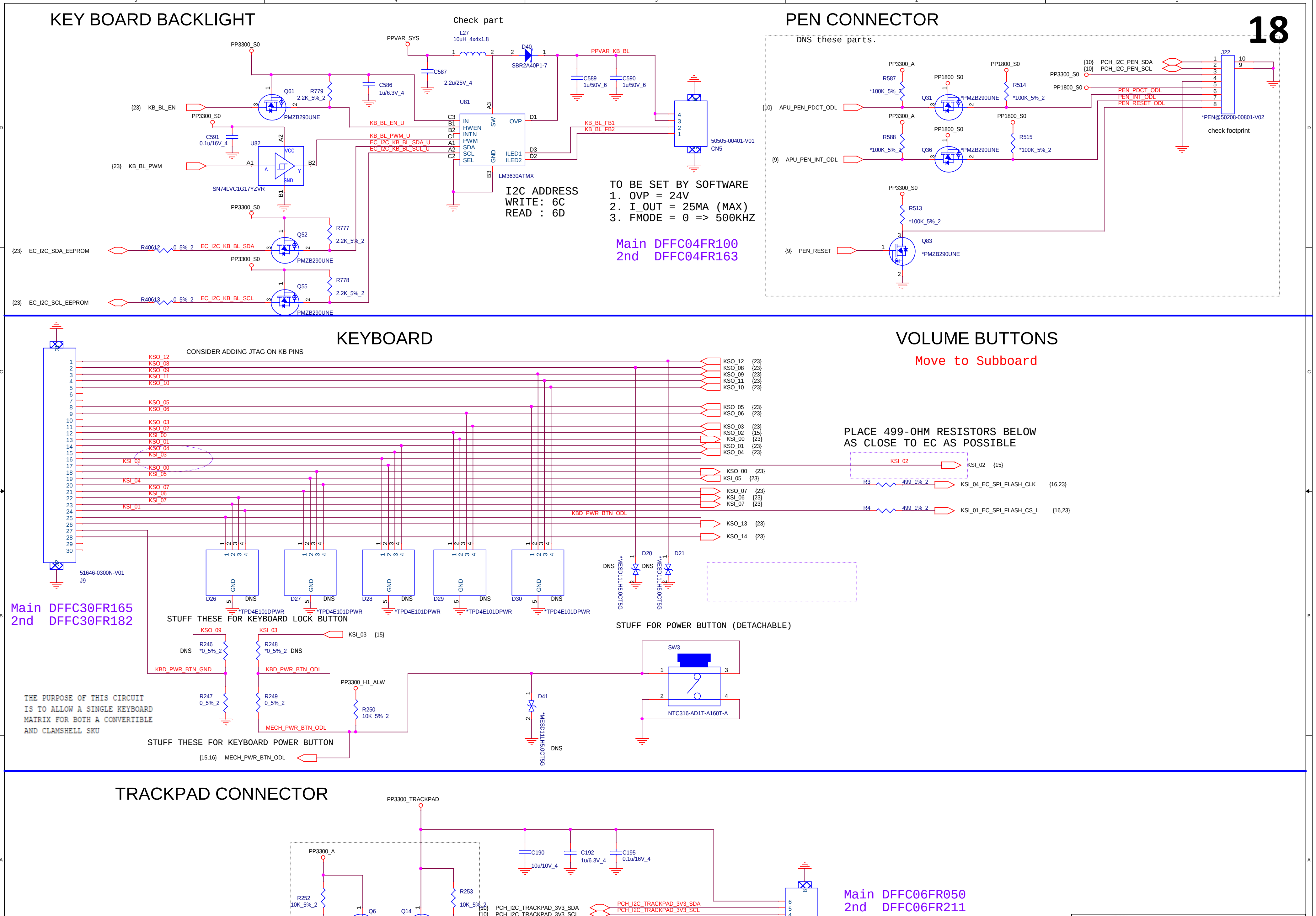
KEY BOARD BACKLIGHT
Check part
PEN CONNECTOR
18
DNS these parts.
PP3300_S0
PPVAR_SYS
L27
10uH_4x4x1.8
D40
SBR2A40P1-7
PPVAR_KB_BL
C587
2.2u/25V_4
C586
1u/6.3V_4
C589
1u/50V_6
C590
1u/50V_6
Q61
R779
2.2K_5%_2
PMZB290UNE
{23} KB_BL_EN
U81
IN
HWEN
INTN
PWM
SDA
SCL
SEL
SW
OVP
GND
ILED1
ILED2
LM3630ATMX
KB_BL_EN_U
KB_BL_PWM_U
EC_I2C_KB_BL_SDA_U
EC_I2C_KB_BL_SCL_U
KB_BL_FB1
KB_BL_FB2
CN5
50505-00401-V01
C591
0.1u/16V_4
U82
VCC
GND
SN74LVC1G17YZVR
{23} KB_BL_PWM
I2C ADDRESS
WRITE: 6C
READ : 6D
TO BE SET BY SOFTWARE
1. OVP = 24V
2. I_OUT = 25MA (MAX)
3. FMODE = 0 => 500KHZ
Main DFFC04FR100
2nd DFFC04FR163
Q52
R777
2.2K_5%_2
PMZB290UNE
{23} EC_I2C_SDA_EEPROM
R40612
0_5%_2
EC_I2C_KB_BL_SDA
Q55
R778
2.2K_5%_2
{23} EC_I2C_SCL_EEPROM
R40613
0_5%_2
EC_I2C_KB_BL_SCL
PP3300_A
PP1800_S0
R587
*100K_5%_2
Q31
*PMZB290UNE
R514
*100K_5%_2
{10} APU_PEN_PDCT_ODL
R588
*100K_5%_2
Q36
R515
*100K_5%_2
{9} APU_PEN_INT_ODL
{10} PCH_I2C_PEN_SDA
{10} PCH_I2C_PEN_SCL
PEN_PDCT_ODL
PEN_INT_ODL
PEN_RESET_ODL
J22
*PEN@50208-00801-V02
check footprint
R513
*100K_5%_2
Q83
*PMZB290UNE
{9} PEN_RESET
KEYBOARD
CONSIDER ADDING JTAG ON KB PINS
KSO_12 KSO_08 KSO_09 KSO_11 KSO_10 KSO_05 KSO_06 KSO_03 KSO_02 KSI_00 KSO_01 KSO_04 KSI_03 KSI_02 KSO_00 KSI_05 KSI_04 KSO_07 KSI_06 KSI_07 KSI_01
KBD_PWR_BTN_ODL
KSO_13 {23}
KSO_14 {23}
J9
51646-0300N-V01
Main DFFC30FR165
2nd DFFC30FR182
D26 D27 D28 D29 D30
DNS
*TPD4E101DPWR
STUFF THESE FOR KEYBOARD LOCK BUTTON
D20 D21
*MESD1L1H5.0CT5G
VOLUME BUTTONS
Move to Subboard
PLACE 499-OHM RESISTORS BELOW
AS CLOSE TO EC AS POSSIBLE
KSI_02 {15}
R3 499_1%_2
KSI_04_EC_SPI_FLASH_CLK {16,23}
R4 499_1%_2
KSI_01_EC_SPI_FLASH_CS_L {16,23}
STUFF FOR POWER BUTTON (DETACHABLE)
SW3
NTC316-AD1T-A160T-A
D41
KSO_09
KSI_03
KSI_03 {15}
R246
*0_5%_2
R248
*0_5%_2
KBD_PWR_BTN_GND
KBD_PWR_BTN_ODL
PP3300_H1_ALW
R247
0_5%_2
R249
0_5%_2
R250
10K_5%_2
MECH_PWR_BTN_ODL
THE PURPOSE OF THIS CIRCUIT
IS TO ALLOW A SINGLE KEYBOARD
MATRIX FOR BOTH A CONVERTIBLE
AND CLAMSHELL SKU
STUFF THESE FOR KEYBOARD POWER BUTTON
{15,16} MECH_PWR_BTN_ODL
TRACKPAD CONNECTOR
PP3300_TRACKPAD
C190
10u/10V_4
C192
1u/6.3V_4
C195
0.1u/16V_4
PP3300_A
R252
10K_5%_2
Q6
Q14
R253
10K_5%_2
PMZB290UNE
{10} PCH_TRACKPAD_INT_3V3_ODL
PCH_TRACKPAD_INT_3V3_ODL
{10} PCH_I2C_TRACKPAD_3V3_SDA
{10} PCH_I2C_TRACKPAD_3V3_SCL
PCH_I2C_TRACKPAD_3V3_SDA
PCH_I2C_TRACKPAD_3V3_SCL
TRACKPAD_INT_3V3_ODL
TRACKPAD_BTN_L
TP32
J12
50506-00601-V01
Main DFFC06FR050
2nd DFFC06FR211
AVOIDS ANY LEAKAGE WITHOUT SOFTWARE EFFORTS

Quanta Computer Inc.

PROJECT : GRUNT

Size	Document Number	Rev
	BASE: KB, TP, PEN	2A

Date: Wednesday, November 14, 2018 Sheet 19 of 35

EDP + CAMERA CONNECTOR

19

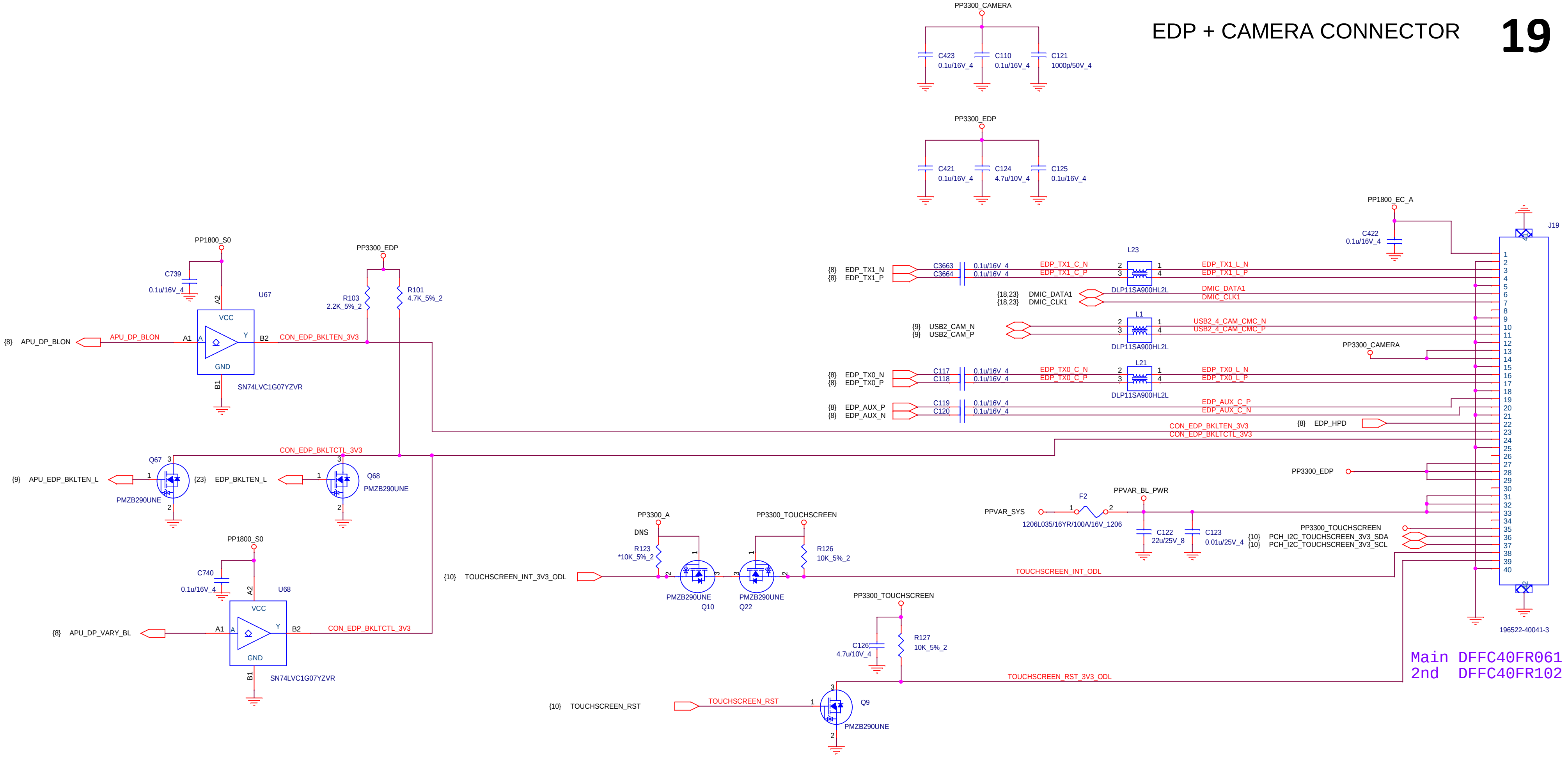
PP3300_CAMERA
C423
0.1u/16V_4
C110
0.1u/16V_4
C121
1000p/50V_4
PP3300_EDP
C421
0.1u/16V_4
C124
4.7u/10V_4
C125
0.1u/16V_4
PP1800_EC_A
C422
0.1u/16V_4
J19
{8} EDP_TX1_N
{8} EDP_TX1_P
C3663
C3664
0.1u/16V_4
0.1u/16V_4
EDP_TX1_C_N
EDP_TX1_C_P
L23
DLP11SA900HL2L
EDP_TX1_L_N
EDP_TX1_L_P
{18,23} DMIC_DATA1
{18,23} DMIC_CLK1
DMIC_DATA1
DMIC_CLK1
L1
{9} USB2_CAM_N
{9} USB2_CAM_P
USB2_4_CAM_CMC_N
USB2_4_CAM_CMC_P
DLP11SA900HL2L
PP3300_CAMERA
L21
{8} EDP_TX0_N
{8} EDP_TX0_P
C117
C118
0.1u/16V_4
0.1u/16V_4
EDP_TX0_C_N
EDP_TX0_C_P
DLP11SA900HL2L
EDP_TX0_L_N
EDP_TX0_L_P
{8} EDP_AUX_P
{8} EDP_AUX_N
C119
C120
0.1u/16V_4
0.1u/16V_4
EDP_AUX_C_P
EDP_AUX_C_N
CON_EDP_BKLTEN_3V3
CON_EDP_BKLTCTL_3V3
{8} EDP_HPD
PP3300_EDP
1 2 3 4 5 6 7 8 9 10 11 12 13 14 15 16 17 18 19 20 21 22 23 24 25 26 27 28 29 30 31 32 33 34 35 36 37 38 39 40
196522-40041-3
Main DFFC40FR061
2nd DFFC40FR102
PP1800_S0
C739
0.1u/16V_4
U67
A2
VCC
GND
B1
{8} APU_DP_BLON
APU_DP_BLON
A1
A
Y
B2
CON_EDP_BKLTEN_3V3
SN74LVC1G07YZVR
PP3300_EDP
R103
2.2K_5%_2
R101
4.7K_5%_2
CON_EDP_BKLTCTL_3V3
Q67
{9} APU_EDP_BKLTEN_L
PMZB290UNE
{23} EDP_BKLTEN_L
Q68
PMZB290UNE
PP1800_S0
C740
0.1u/16V_4
U68
VCC
GND
{8} APU_DP_VARY_BL
A1
Y
B2
CON_EDP_BKLTCTL_3V3
SN74LVC1G07YZVR
PP3300_A
DNS
R123
*10K_5%_2
{10} TOUCHSCREEN_INT_3V3_ODL
PMZB290UNE
Q10
PMZB290UNE
Q22
PP3300_TOUCHSCREEN
R126
10K_5%_2
TOUCHSCREEN_INT_ODL
PPVAR_SYS
F2
1206L035/16YR/100A/16V_1206
PPVAR_BL_PWR
C122
22u/25V_8
C123
0.01u/25V_4
PP3300_TOUCHSCREEN
{10} PCH_I2C_TOUCHSCREEN_3V3_SDA
{10} PCH_I2C_TOUCHSCREEN_3V3_SCL
PP3300_TOUCHSCREEN
C126
4.7u/10V_4
R127
10K_5%_2
TOUCHSCREEN_RST_3V3_ODL
{10} TOUCHSCREEN_RST
TOUCHSCREEN_RST
Q9
PMZB290UNE

EC WOV SEL

C-PANEL CAMERA

DNS these parts.

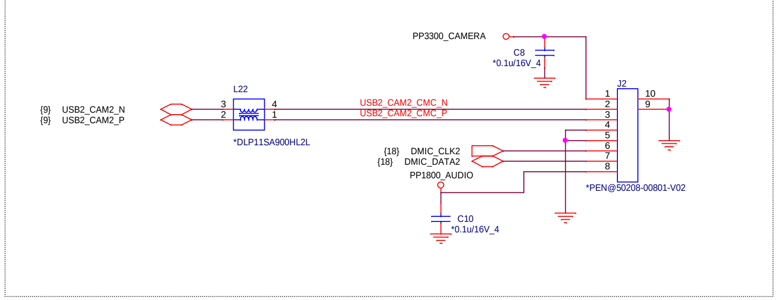
PP3300_CAMERA
C8
*0.1u/16V_4
J2
L22
{9} USB2_CAM2_N
{9} USB2_CAM2_P
USB2_CAM2_CMC_N
USB2_CAM2_CMC_P
*DLP11SA900HL2L
{18} DMIC_CLK2
{18} DMIC_DATA2
PP1800_AUDIO
C10
*0.1u/16V_4
*PEN@50208-00801-V02
1 2 3 4 5 6 7 8 9 10

Quanta Computer Inc.

PROJECT : GRUNT

Size	Document Number	Rev
	LID: eDP, CAM, TOUCH, SENSOR	2A

Date: Wednesday, November 14, 2018 Sheet 20 of 35

GYRO

DNS these parts.

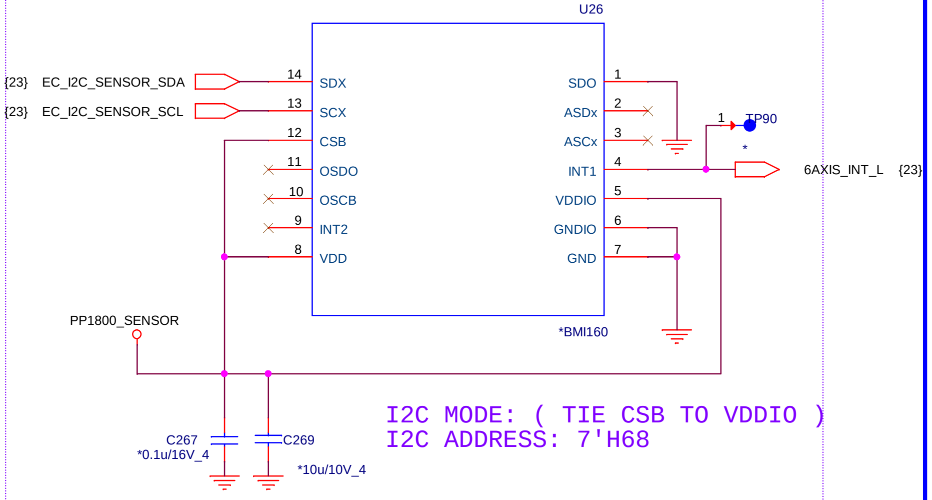
U26
{23} EC_I2C_SENSOR_SDA
{23} EC_I2C_SENSOR_SCL
14 SDX
13 SCX
12 CSB
11 OSDO
10 OSCB
9 INT2
8 VDD
1 SDO
2 ASDx
3 ASCx
4 INT1
5 VDDIO
6 GNDIO
7 GND
1 TP90
*
6AXIS_INT_L {23}
*BMI160
PP1800_SENSOR
C267
*0.1u/16V_4
C269
*10u/10V_4

I2C MODE: (TIE CSB TO VDDIO)
I2C ADDRESS: 7'H68

LID ACCEL

DNS these parts.

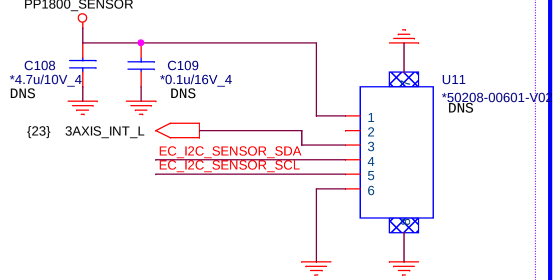
PP1800_SENSOR
C108
*4.7u/10V_4
DNS
C109
*0.1u/16V_4
DNS
{23} 3AXIS_INT_L
EC_I2C_SENSOR_SDA
EC_I2C_SENSOR_SCL
U11
*50208-00601-V02
DNS
1
2
3
4
5
6

I2C MODE: (SET BY NCS TIE TO VDDIO)
I2C MAX SPEED = 3.4MHZ
I2C ADDRESS: 0X3C (SDO_ADDR = GND), 0X3E (SDO_ADDR = VDDIO)

CHARGE/BATTERY LED

Main BEB00006ZA0
2nd BEB00023ZA0

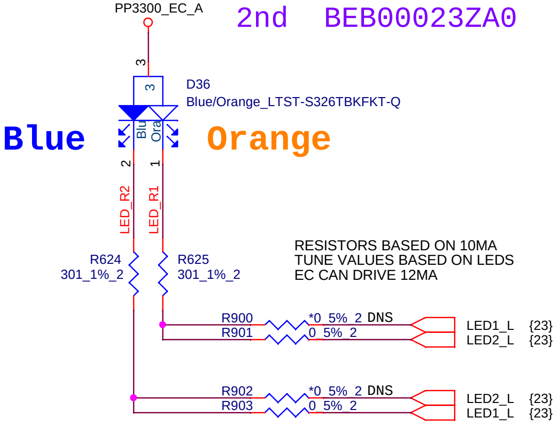
PP3300_EC_A
3
3
D36
Blue/Orange_LTST-S326TBKFKT-Q
Blue
Orange
Blu
Ora
2
1
LED_R2
LED_R1
R624
301_1%_2
R625
301_1%_2
R900
*0_5%_2 DNS
R901
0_5%_2
LED1_L {23}
LED2_L {23}
R902
*0_5%_2 DNS
R903
0_5%_2
LED2_L {23}
LED1_L {23}

RESISTORS BASED ON 10MA
TUNE VALUES BASED ON LEDS
EC CAN DRIVE 12MA

Quanta Computer Inc.
PROJECT : GRUNT

Size	Document Number	Rev
	SENSOR: GYRO, LED	2A

Date: Wednesday, November 14, 2018
Sheet 21 of 35

WIFI

21

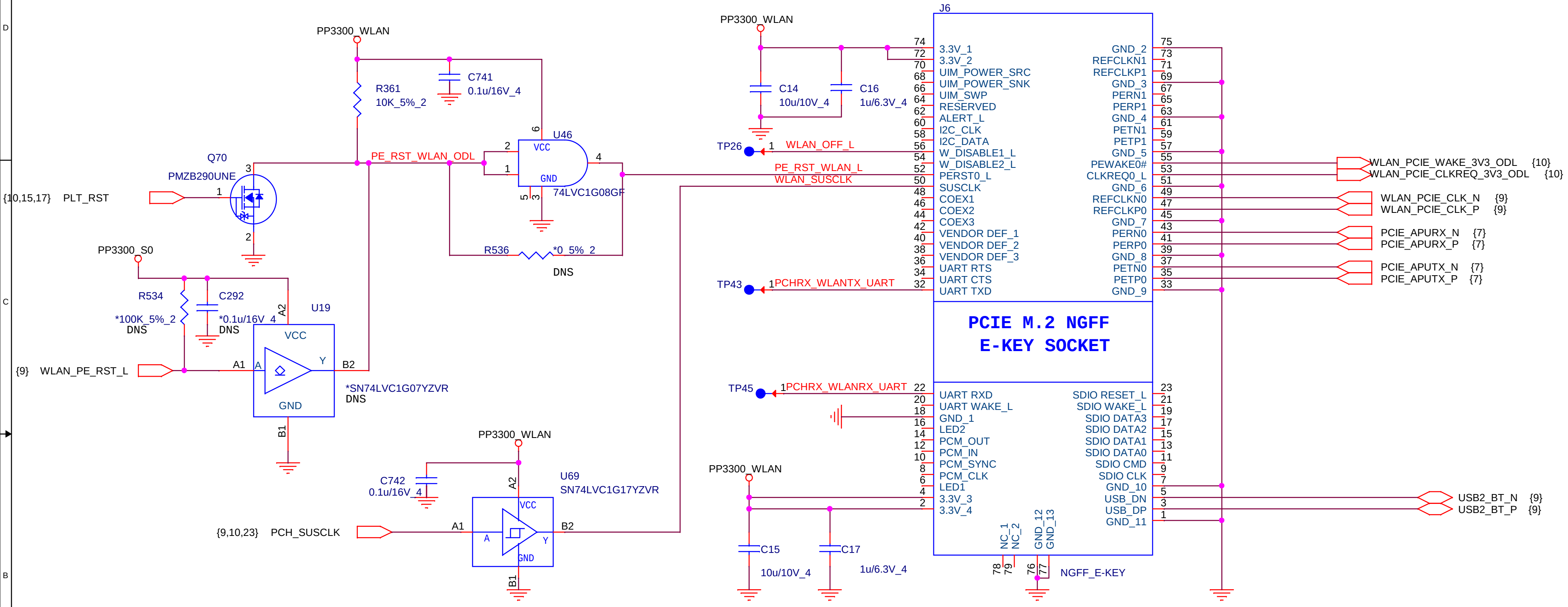

PP3300_WLAN
R361
10K_5%_2
C741
0.1u/16V_4
U46
VCC
GND
74LVC1G08GF
PE_RST_WLAN_ODL
Q70
PMZB290UNE
{10,15,17} PLT_RST
PP3300_S0
R534
*100K_5%_2
DNS
C292
*0.1u/16V_4
DNS
U19
VCC
GND
A1
B2
A2
B1
*SN74LVC1G07YZVR
DNS
{9} WLAN_PE_RST_L
R536
*0_5%_2
DNS
C742
0.1u/16V_4
U69
SN74LVC1G17YZVR
{9,10,23} PCH_SUSCLK
C14
10u/10V_4
C16
1u/6.3V_4
TP26
WLAN_OFF_L
PE_RST_WLAN_L
WLAN_SUSCLK
TP43
PCHRX_WLANTX_UART
TP45
PCHRX_WLANRX_UART
C15
10u/10V_4
C17
1u/6.3V_4
J6
3.3V_1
3.3V_2
UIM_POWER_SRC
UIM_POWER_SNK
UIM_SWP
RESERVED
ALERT_L
I2C_CLK
I2C_DATA
W_DISABLE1_L
W_DISABLE2_L
PERST0_L
SUSCLK
COEX1
COEX2
COEX3
VENDOR DEF_1
VENDOR DEF_2
VENDOR DEF_3
UART RTS
UART CTS
UART TXD
GND_2
REFCLKN1
REFCLKP1
GND_3
PERN1
PERP1
GND_4
PETN1
PETP1
GND_5
PEWAKE0#
CLKREQ0_L
GND_6
REFCLKN0
REFCLKP0
GND_7
PERN0
PERP0
GND_8
PETN0
PETP0
GND_9
PCIE M.2 NGFF
E-KEY SOCKET
UART RXD
UART WAKE_L
GND_1
LED2
PCM_OUT
PCM_IN
PCM_SYNC
PCM_CLK
LED1
3.3V_3
3.3V_4
SDIO RESET_L
SDIO WAKE_L
SDIO DATA3
SDIO DATA2
SDIO DATA1
SDIO DATA0
SDIO CMD
SDIO CLK
GND_10
USB_DN
USB_DP
GND_11
NC_1
NC_2
GND_12
GND_13
NGFF_E-KEY
WLAN_PCIE_WAKE_3V3_ODL {10}
WLAN_PCIE_CLKREQ_3V3_ODL {10}
WLAN_PCIE_CLK_N {9}
WLAN_PCIE_CLK_P {9}
PCIE_APURX_N {7}
PCIE_APURX_P {7}
PCIE_APUTX_N {7}
PCIE_APUTX_P {7}
USB2_BT_N {9}
USB2_BT_P {9}

Main DFHS75FR108
2nd DFHS75FR270

Quanta Computer Inc.

PROJECT : GRUNT

Size
Document Number
WIFI
Rev
2A
Date: Wednesday, November 14, 2018
Sheet 22 of 35

DVT use NPCX796FA0BX

Symbol PN:TMPNPCX796F

22

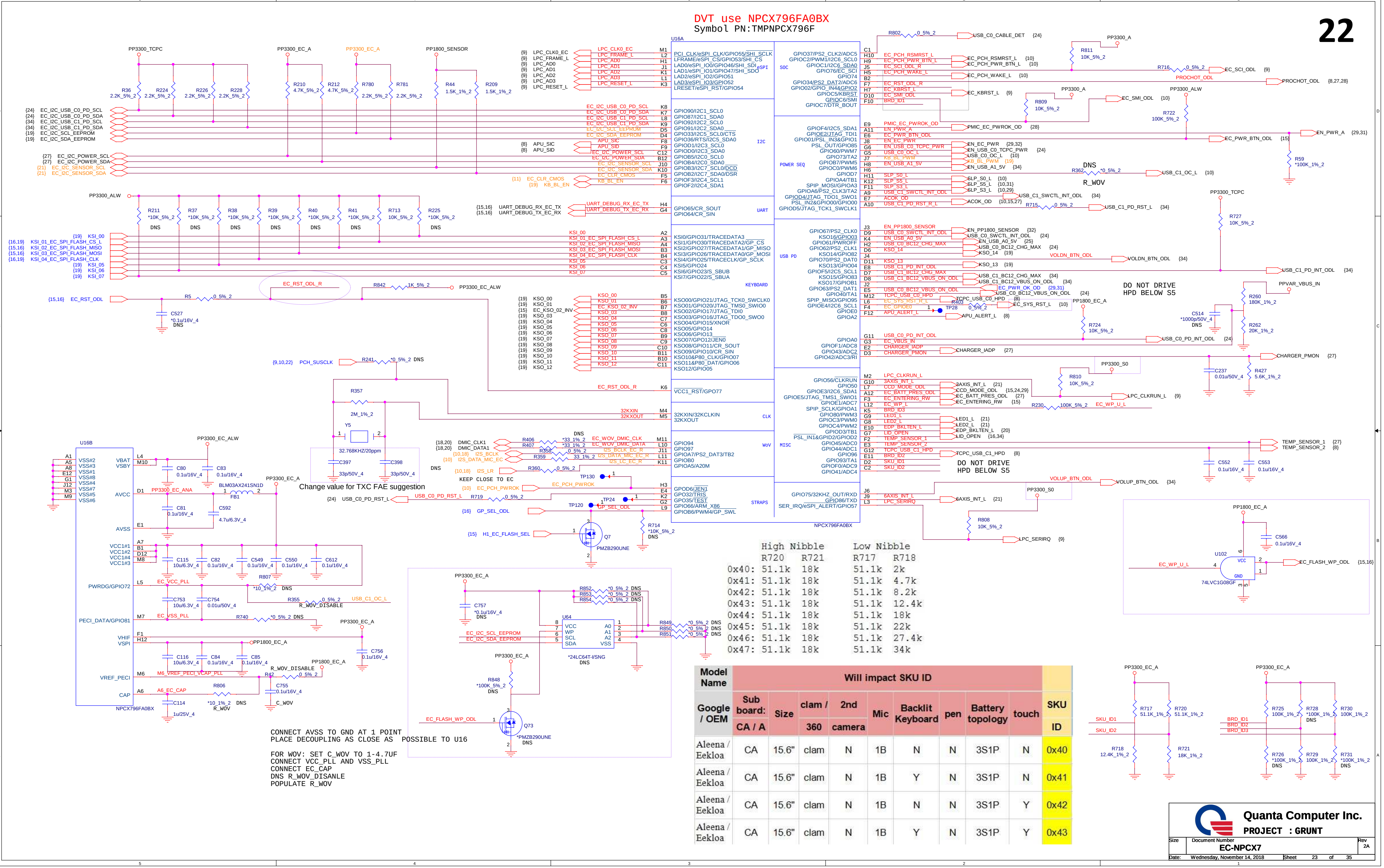

U16A
U16B
NPCX796FA0BX
PP3300_TCPC
PP3300_EC_A
PP1800_SENSOR
PP3300_ALW
PP3300_A
PP3300_S0
PP1800_EC_A
EC_I2C_USB_C0_PD_SCL
EC_I2C_USB_C0_PD_SDA
EC_I2C_USB_C1_PD_SCL
EC_I2C_USB_C1_PD_SDA
EC_I2C_SCL_EEPROM
EC_I2C_SDA_EEPROM
EC_I2C_POWER_SCL
EC_I2C_POWER_SDA
EC_I2C_SENSOR_SCL
EC_I2C_SENSOR_SDA
LPC_CLK0_EC
LPC_FRAME_L
LPC_AD0
LPC_AD1
LPC_AD2
LPC_AD3
LPC_RESET_L
APU_SIC
APU_SID
EC_CLR_CMOS
KB_BL_EN
UART_DEBUG_RX_EC_TX
UART_DEBUG_TX_EC_RX
KSI_00
KSI_01_EC_SPI_FLASH_CS_L
KSI_02_EC_SPI_FLASH_MISO
KSI_03_EC_SPI_FLASH_MOSI
KSI_04_EC_SPI_FLASH_CLK
KSI_05
KSI_06
KSI_07
EC_RST_ODL
EC_RST_ODL_R
KSO_00 … KSO_12
EC_KSO_02_INV
PCH_SUSCLK
32KXIN
32KXOUT
Y5
32.768KHZ/20ppm
Change value for TXC FAE suggestion
DMIC_CLK1
DMIC_DATA1
EC_WOV_DMIC_CLK
EC_WOV_DMIC_DATA
I2S_BCLK
I2S_DATA_MIC_EC
I2S_LR
KEEP CLOSE TO EC
EC_PCH_PWROK
USB_C0_PD_RST_L
GP_SEL_ODL
H1_EC_FLASH_SEL
Q7
PMZB290UNE
Q73
*PMZB290UNE
U64
*24LC64T-I/SNG
EC_FLASH_WP_ODL
R_WOV_DISABLE
R_WOV
C_WOV
EC_VCC_PLL
EC_VSS_PLL
M6_VREF_PECI_VCAP_PLL
A6_EC_CAP
PP3300_EC_ANA
BLM03AX241SN1D
FB1
VBAT
VSBY
AVCC
AVSS
VCC1#1
VCC1#2
VCC1#4
VCC1#3
PWRDG/GPIO72
PECI_DATA/GPIO81
VHIF
VSPI
VREF_PECI
CAP
USB_C0_CABLE_DET
EC_PCH_RSMRST_L
EC_PCH_PWR_BTN_L
EC_SCI_ODL
EC_PCH_WAKE_L
EC_KBRST_L
EC_SMI_ODL
PROCHOT_ODL
PMIC_EC_PWROK_ODL
EN_PWR_A
EC_PWR_BTN_ODL
EN_EC_PWR
EN_USB_C0_TCPC_PWR
USB_C0_OC_L
KB_BL_PWM
EN_USB_A1_5V
SLP_S0_L
SLP_S5_L
SLP_S3_L
USB_C1_SWCTL_INT_ODL
ACOK_OD
USB_C1_PD_RST_L
USB_C1_OC_L
DNS
R_WOV
EN_PP1800_SENSOR
USB_C0_SWCTL_INT_ODL
EN_USB_A0_5V
USB_C0_BC12_CHG_MAX
KSO_14
KSO_13
VOLDN_BTN_ODL
USB_C1_PD_INT_ODL
USB_C1_BC12_CHG_MAX
USB_C1_BC12_VBUS_ON_ODL
USB_C0_BC12_VBUS_ON_ODL
EC_PWR_OK_OD
TCPC_USB_C0_HPD
EC_SYS_RST_L
APU_ALERT_L
DO NOT DRIVE
HPD BELOW S5
PPVAR_VBUS_IN
USB_C0_PD_INT_ODL
EC_VBUS_IN
CHARGER_IADP
CHARGER_PMON
LPC_CLKRUN_L
3AXIS_INT_L
CCD_MODE_ODL
EC_BATT_PRES_ODL
EC_ENTERING_RW
EC_WP_L
BRD_ID3
LED1_L
LED2_L
EDP_BKLTEN_L
LID_OPEN
TEMP_SENSOR_1
TEMP_SENSOR_2
TCPC_USB_C1_HPD
BRD_ID2
SKU_ID1
SKU_ID2
VOLUP_BTN_ODL
6AXIS_INT_L
LPC_SERIRQ
U102
74LVC1G08GF
BRD_ID1

CONNECT AVSS TO GND AT 1 POINT
PLACE DECOUPLING AS CLOSE AS POSSIBLE TO U16

FOR WOV: SET C_WOV TO 1-4.7UF
CONNECT VCC_PLL AND VSS_PLL
CONNECT EC_CAP
DNS R_WOV_DISANLE
POPULATE R_WOV

	High Nibble		Low Nibble	
	R720	R721	R717	R718
0x40:	51.1k	18k	51.1k	2k
0x41:	51.1k	18k	51.1k	4.7k
0x42:	51.1k	18k	51.1k	8.2k
0x43:	51.1k	18k	51.1k	12.4k
0x44:	51.1k	18k	51.1k	18k
0x45:	51.1k	18k	51.1k	22k
0x46:	51.1k	18k	51.1k	27.4k
0x47:	51.1k	18k	51.1k	34k

Model Name	Will impact SKU ID									
Google / OEM	Sub board: CA / A	Size	clam / 360	2nd camera	Mic	Backlit Keyboard	pen	Battery topology	touch	SKU ID
Aleena / Eekloa	CA	15.6"	clam	N	1B	N	N	3S1P	N	0x40
Aleena / Eekloa	CA	15.6"	clam	N	1B	Y	N	3S1P	N	0x41
Aleena / Eekloa	CA	15.6"	clam	N	1B	N	N	3S1P	Y	0x42
Aleena / Eekloa	CA	15.6"	clam	N	1B	Y	N	3S1P	Y	0x43

Quanta Computer Inc.

PROJECT : GRUNT

Size | Document Number: EC-NPCX7 | Rev: 2A

Date: Wednesday, November 14, 2018 | Sheet 23 of 35

PORT 0: BC1.2

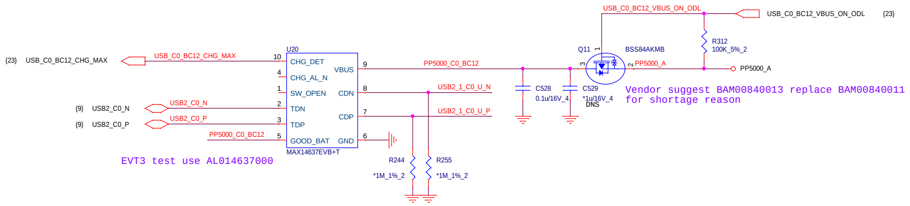
U20
MAX14637EVB+T
CHG_DET
CHG_AL_N
SW_OPEN
TDN
TDP
GOOD_BAT
VBUS
CDN
CDP
GND
{23} USB_C0_BC12_CHG_MAX
USB_C0_BC12_CHG_MAX
{9} USB2_C0_N
{9} USB2_C0_P
USB2_C0_N
USB2_C0_P
PP5000_C0_BC12
USB2_1_C0_U_N
USB2_1_C0_U_P
C528
0.1u/16V_4
C529
*1u/16V_4
DNS
Q11
BSS84AKMB
PP5000_A
USB_C0_BC12_VBUS_ON_ODL
{23}
R312
100K_5%_2
R244
*1M_1%_2
R255
*1M_1%_2

Vendor suggest BAM00840013 replace BAM00840011 for shortage reason

EVT3 test use AL014637000

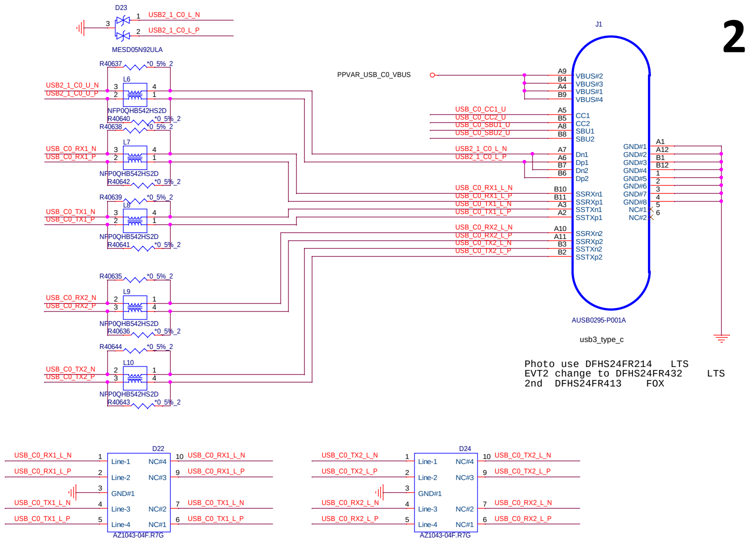
D23
MESD05N92ULA
USB2_1_C0_L_N
USB2_1_C0_L_P
R40637 *0_5%_2
L6
NFP0QHB542HS2D
USB2_1_C0_U_N
USB2_1_C0_U_P
R40640 *0_5%_2
R40638 *0_5%_2
L7
USB_C0_RX1_N
USB_C0_RX1_P
R40642 *0_5%_2
R40639 *0_5%_2
L8
USB_C0_TX1_N
USB_C0_TX1_P
R40641 *0_5%_2
R40635 *0_5%_2
L9
USB_C0_RX2_N
USB_C0_RX2_P
R40636 *0_5%_2
R40644 *0_5%_2
L10
USB_C0_TX2_N
USB_C0_TX2_P
R40643 *0_5%_2
J1
AUSB0295-P001A
usb3_type_c
PPVAR_USB_C0_VBUS
VBUS#2
VBUS#3
VBUS#1
VBUS#4
CC1
CC2
SBU1
SBU2
Dn1
Dp1
Dn2
Dp2
SSRXn1
SSRXp1
SSTXn1
SSTXp1
SSRXn2
SSRXp2
SSTXn2
SSTXp2
GND#1
GND#2
GND#3
GND#4
GND#5
GND#6
GND#7
GND#8
NC#1
NC#2
USB_C0_CC1_U
USB_C0_CC2_U
USB_C0_SBU1_U
USB_C0_SBU2_U
USB2_1_C0_L_N
USB2_1_C0_L_P
USB_C0_RX1_L_N
USB_C0_RX1_L_P
USB_C0_TX1_L_N
USB_C0_TX1_L_P
USB_C0_RX2_L_N
USB_C0_RX2_L_P
USB_C0_TX2_L_N
USB_C0_TX2_L_P
D22
AZ1043-04F.R7G
D24
AZ1043-04F.R7G
Line-1
Line-2
GND#1
Line-3
Line-4
NC#4
NC#3
NC#2
NC#1

Photo use DFHS24FR214 LTS
EVT2 change to DFHS24FR432 LTS
2nd DFHS24FR413 FOX

PORT 0: TCPC

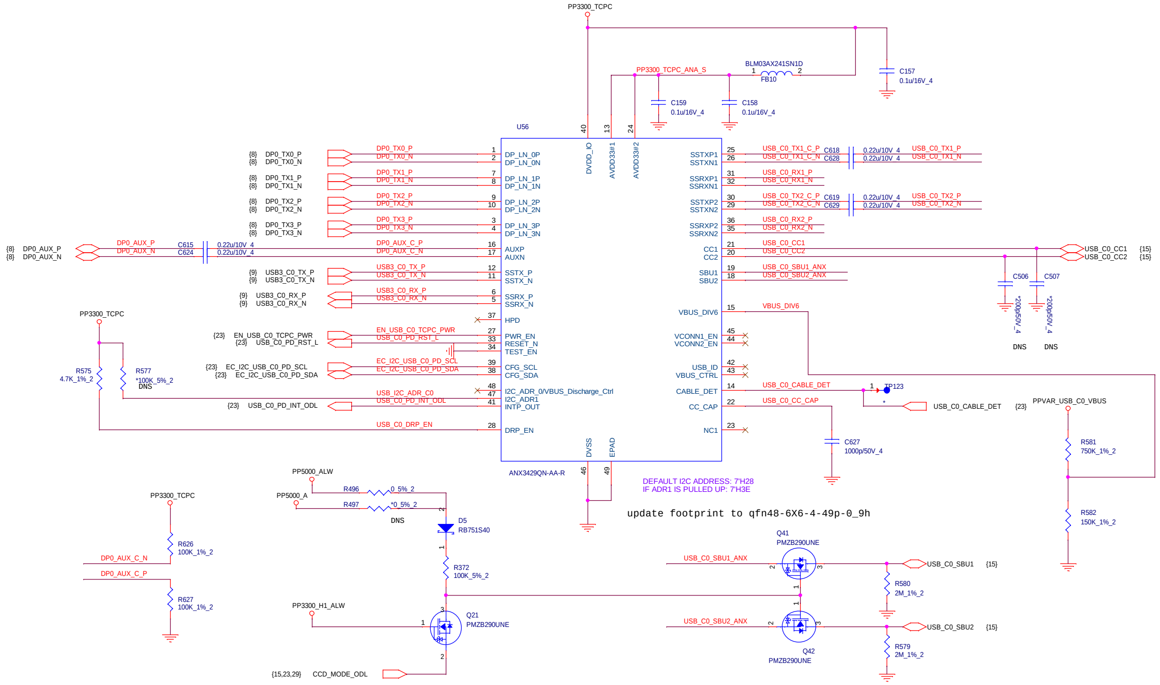
U56
ANX3429QN-AA-R
PP3300_TCPC
PP3300_TCPC_ANA_S
BLM03AX241SN1D
FB10
C157
0.1u/16V_4
C159
0.1u/16V_4
C158
0.1u/16V_4
DVDD_IO
AVDD33#1
AVDD33#2
DP_LN_0P
DP_LN_0N
DP_LN_1P
DP_LN_1N
DP_LN_2P
DP_LN_2N
DP_LN_3P
DP_LN_3N
AUXP
AUXN
SSTX_P
SSTX_N
SSRX_P
SSRX_N
HPD
PWR_EN
RESET_N
TEST_EN
CFG_SCL
CFG_SDA
I2C_ADR_0/VBUS_Discharge_Ctrl
I2C_ADR1
INTP_OUT
DRP_EN
DVSS
EPAD
SSTXP1
SSTXN1
SSRXP1
SSRXN1
SSTXP2
SSTXN2
SSRXP2
SSRXN2
CC1
CC2
SBU1
SBU2
VBUS_DIV6
VCONN1_EN
VCONN2_EN
USB_ID
VBUS_CTRL
CABLE_DET
CC_CAP
NC1
{8} DP0_TX0_P
{8} DP0_TX0_N
{8} DP0_TX1_P
{8} DP0_TX1_N
{8} DP0_TX2_P
{8} DP0_TX2_N
{8} DP0_TX3_P
{8} DP0_TX3_N
{8} DP0_AUX_P
{8} DP0_AUX_N
C615
C624
0.22u/10V_4
{9} USB3_C0_TX_P
{9} USB3_C0_TX_N
{9} USB3_C0_RX_P
{9} USB3_C0_RX_N
{23} EN_USB_C0_TCPC_PWR
{23} USB_C0_PD_RST_L
{23} EC_I2C_USB_C0_PD_SCL
{23} EC_I2C_USB_C0_PD_SDA
USB_I2C_ADR_C0
USB_C0_PD_INT_ODL
{23} USB_C0_PD_INT_ODL
USB_C0_DRP_EN
R575
4.7K_1%_2
R577
*100K_5%_2
DNS
C618
C628
C619
C629
0.22u/10V_4
USB_C0_TX1_P
USB_C0_TX1_N
USB_C0_TX2_P
USB_C0_TX2_N
USB_C0_RX1_P
USB_C0_RX1_N
USB_C0_RX2_P
USB_C0_RX2_N
USB_C0_CC1
USB_C0_CC2
{15}
C506
C507
*200p/50V_4
DNS
USB_C0_SBU1_ANX
USB_C0_SBU2_ANX
VBUS_DIV6
USB_C0_CABLE_DET
TP123
{23}
USB_C0_CC_CAP
C627
1000p/50V_4
PPVAR_USB_C0_VBUS
R581
750K_1%_2
R582
150K_1%_2
PP5000_ALW
PP5000_A
R496
0_5%_2
R497
*0_5%_2
DNS
D5
RB751S40
R372
100K_5%_2
PP3300_H1_ALW
Q21
PMZB290UNE
{15,23,29} CCD_MODE_ODL
PP3300_TCPC
R626
100K_1%_2
R627
100K_1%_2
DP0_AUX_C_N
DP0_AUX_C_P
Q41
PMZB290UNE
Q42
PMZB290UNE
USB_C0_SBU1
USB_C0_SBU2
R580
2M_1%_2
R579
2M_1%_2

DEFAULT I2C ADDRESS: 7'H28
IF ADR1 IS PULLED UP: 7'H3E

update footprint to qfn48-6X6-4-49p-0_9h

PORT 0: SWITCHES

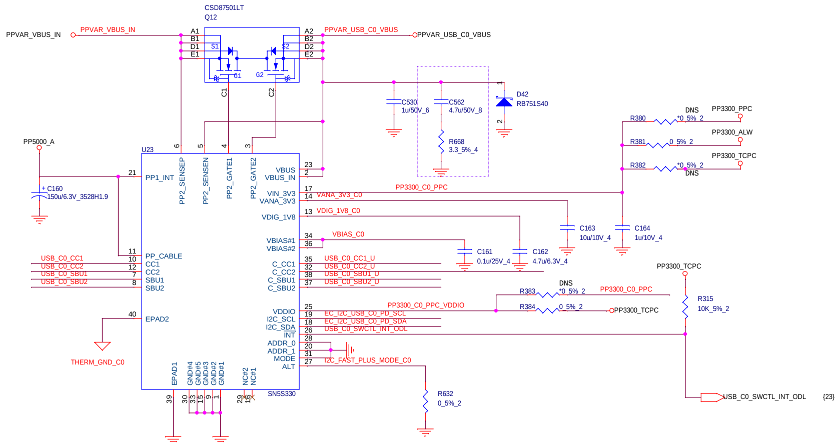
CSD87501LT
Q12
PPVAR_VBUS_IN
PPVAR_USB_C0_VBUS
S1
G1
G2
S2
C530
1u/50V_6
C562
4.7u/50V_8
R668
3.3_5%_4
D42
RB751S40
U23
SN5S330
PP5000_A
C160
150u/6.3V_3528H1.9
PP1_INT
PP_CABLE
CC1
CC2
SBU1
SBU2
EPAD2
PP2_SENSEP
PP2_SENSEN
PP2_GATE1
PP2_GATE2
VBUS
VBUS_IN
VIN_3V3
VANA_3V3
VDIG_1V8
VBIAS#1
VBIAS#2
C_CC1
C_CC2
C_SBU1
C_SBU2
VDDIO
I2C_SCL
I2C_SDA
INT
ADDR_0
ADDR_1
MODE
ALT
GND#4
GND#5
GND#3
GND#2
GND#1
NC#2
NC#1
VANA_3V3_C0
VDIG_1V8_C0
VBIAS_C0
PP3300_C0_PPC
C161
0.1u/25V_4
C162
4.7u/6.3V_4
C163
10u/10V_4
C164
1u/10V_4
USB_C0_CC1
USB_C0_CC2
USB_C0_SBU1
USB_C0_SBU2
USB_C0_CC1_U
USB_C0_CC2_U
USB_C0_SBU1_U
USB_C0_SBU2_U
PP3300_C0_PPC_VDDIO
EC_I2C_USB_C0_PD_SCL
EC_I2C_USB_C0_PD_SDA
USB_C0_SWCTL_INT_ODL
I2C_FAST_PLUS_MODE_C0
THERM_GND_C0
R632
0_5%_2
R380
*0_5%_2
DNS
PP3300_PPC
R381
0_5%_2
PP3300_ALW
R382
*0_5%_2
DNS
PP3300_TCPC
R383
*0_5%_2
DNS
R384
0_5%_2
PP3300_C0_PPC
PP3300_TCPC
R315
10K_5%_2
USB_C0_SWCTL_INT_ODL
{23}

Quanta Computer Inc.

PROJECT : GRUNT

Size	Document Number	Rev
	USB C0	2A

Date: Wednesday, November 14, 2018 Sheet 24 of 35

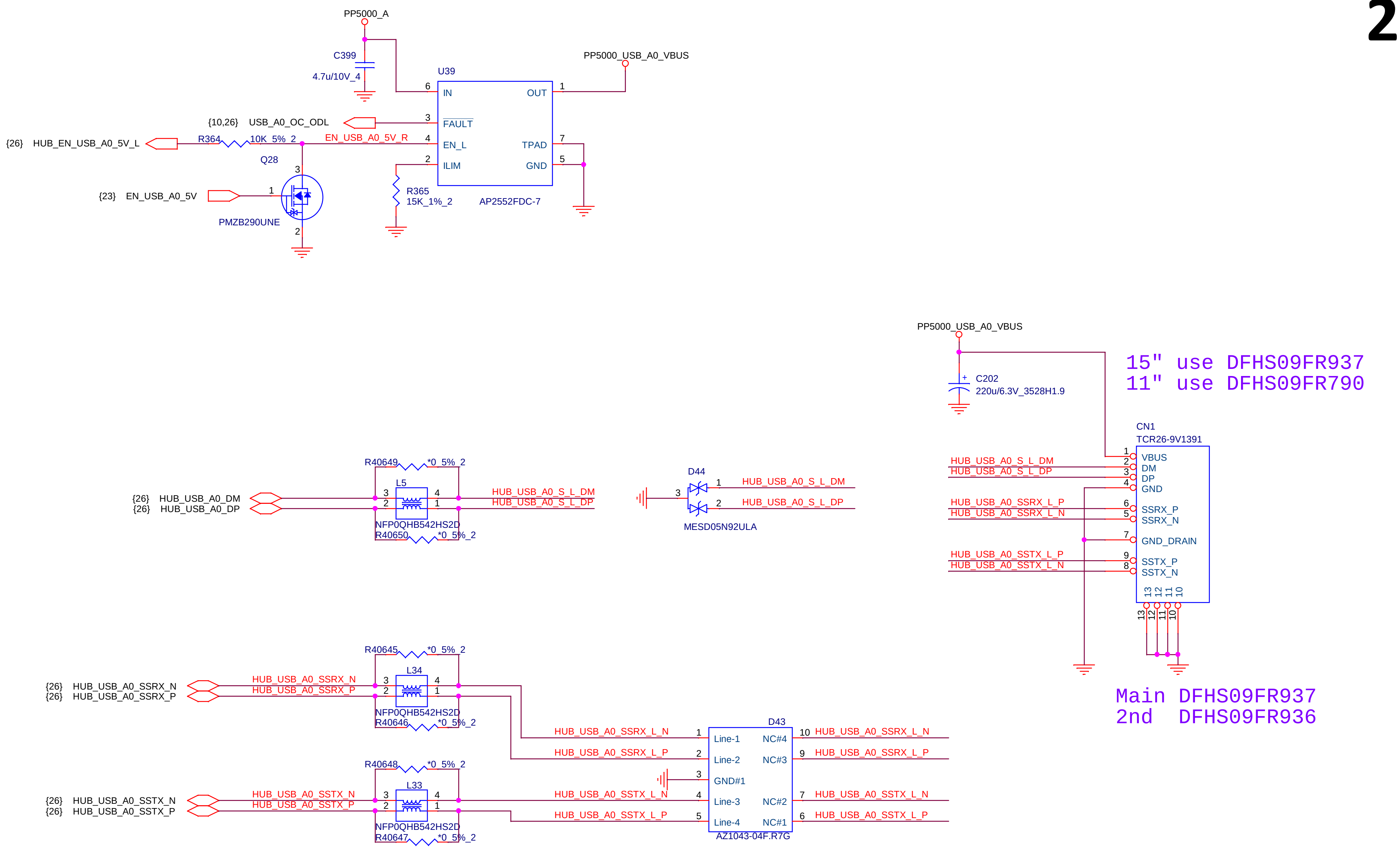
PP5000_A
C399
4.7u/10V_4
U39
PP5000_USB_A0_VBUS
6 IN
OUT 1
{10,26} USB_A0_OC_ODL
3 FAULT
{26} HUB_EN_USB_A0_5V_L
R364
10K_5%_2
EN_USB_A0_5V_R
4 EN_L
TPAD 7
2 ILIM
GND 5
Q28
{23} EN_USB_A0_5V
PMZB290UNE
R365
15K_1%_2
AP2552FDC-7
PP5000_USB_A0_VBUS
C202
220u/6.3V_3528H1.9
CN1
TCR26-9V1391
1 VBUS
2 DM
3 DP
4 GND
6 SSRX_P
5 SSRX_N
7 GND_DRAIN
9 SSTX_P
8 SSTX_N
13 12 11 10
HUB_USB_A0_S_L_DM
HUB_USB_A0_S_L_DP
HUB_USB_A0_SSRX_L_P
HUB_USB_A0_SSRX_L_N
HUB_USB_A0_SSTX_L_P
HUB_USB_A0_SSTX_L_N
R40649 *0_5%_2
L5
{26} HUB_USB_A0_DM
{26} HUB_USB_A0_DP
NFP0QHB542HS2D
R40650 *0_5%_2
D44
MESD05N92ULA
R40645 *0_5%_2
L34
{26} HUB_USB_A0_SSRX_N
{26} HUB_USB_A0_SSRX_P
HUB_USB_A0_SSRX_N
HUB_USB_A0_SSRX_P
NFP0QHB542HS2D
R40646 *0_5%_2
D43
Line-1 NC#4
Line-2 NC#3
GND#1
Line-3 NC#2
Line-4 NC#1
AZ1043-04F.R7G
R40648 *0_5%_2
L33
{26} HUB_USB_A0_SSTX_N
{26} HUB_USB_A0_SSTX_P
HUB_USB_A0_SSTX_N
HUB_USB_A0_SSTX_P
NFP0QHB542HS2D
R40647 *0_5%_2

15" use DFHS09FR937
11" use DFHS09FR790

Main DFHS09FR937
2nd DFHS09FR936

Quanta Computer Inc.

PROJECT : GRUNT

Size	Document Number	Rev
	USB A CONNECTORS	2A

Date: Wednesday, November 14, 2018 Sheet 25 of 35

USB HUB

IF ONLY A SINGLE USB3.0 TYPE-A PORT IS NEEDED, THIS HUB CAN BE REMOVED
AND REPLACED WITH SN1702001 (OR EQUIVALENT)

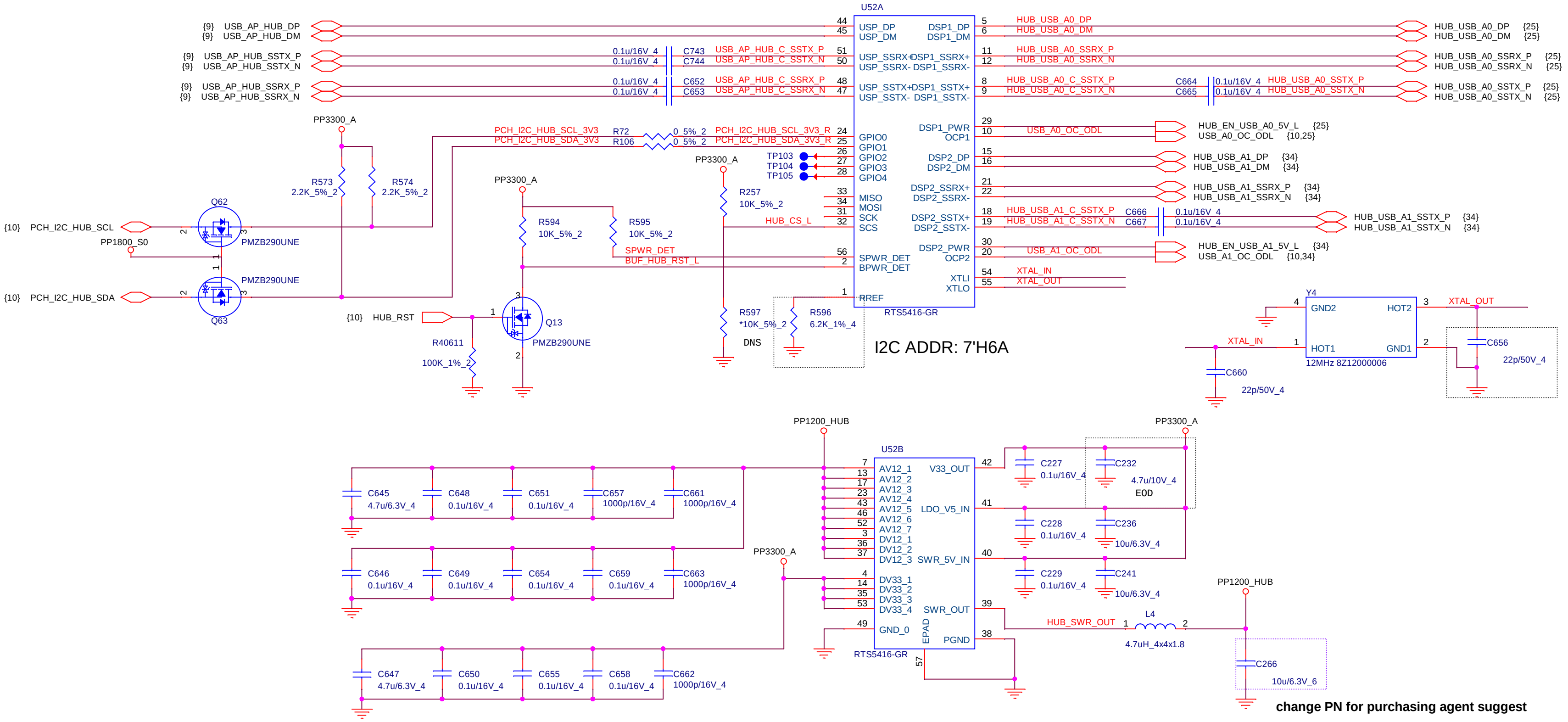
U52A
{9} USB_AP_HUB_DP
{9} USB_AP_HUB_DM
{9} USB_AP_HUB_SSTX_P
{9} USB_AP_HUB_SSTX_N
{9} USB_AP_HUB_SSRX_P
{9} USB_AP_HUB_SSRX_N
0.1u/16V_4 C743 USB_AP_HUB_C_SSTX_P
0.1u/16V_4 C744 USB_AP_HUB_C_SSTX_N
0.1u/16V_4 C652 USB_AP_HUB_C_SSRX_P
0.1u/16V_4 C653 USB_AP_HUB_C_SSRX_N
USP_DP
USP_DM
USP_SSRX+
USP_SSRX-
USP_SSTX+
USP_SSTX-
DSP1_DP
DSP1_DM
DSP1_SSRX+
DSP1_SSRX-
DSP1_SSTX+
DSP1_SSTX-
HUB_USB_A0_DP
HUB_USB_A0_DM
HUB_USB_A0_SSRX_P
HUB_USB_A0_SSRX_N
HUB_USB_A0_C_SSTX_P
HUB_USB_A0_C_SSTX_N
C664 0.1u/16V_4 HUB_USB_A0_SSTX_P
C665 0.1u/16V_4 HUB_USB_A0_SSTX_N
HUB_USB_A0_DP {25}
HUB_USB_A0_DM {25}
HUB_USB_A0_SSRX_P {25}
HUB_USB_A0_SSRX_N {25}
HUB_USB_A0_SSTX_P {25}
HUB_USB_A0_SSTX_N {25}
PP3300_A
R573 2.2K_5%_2
R574 2.2K_5%_2
PCH_I2C_HUB_SCL_3V3
PCH_I2C_HUB_SDA_3V3
R72 0_5%_2
R106 0_5%_2
PCH_I2C_HUB_SCL_3V3_R
PCH_I2C_HUB_SDA_3V3_R
GPIO0
GPIO1
GPIO2
GPIO3
GPIO4
TP103
TP104
TP105
DSP1_PWR
OCP1
USB_A0_OC_ODL
HUB_EN_USB_A0_5V_L {25}
USB_A0_OC_ODL {10,25}
DSP2_DP
DSP2_DM
HUB_USB_A1_DP {34}
HUB_USB_A1_DM {34}
DSP2_SSRX+
DSP2_SSRX-
HUB_USB_A1_SSRX_P {34}
HUB_USB_A1_SSRX_N {34}
DSP2_SSTX+
DSP2_SSTX-
HUB_USB_A1_C_SSTX_P
HUB_USB_A1_C_SSTX_N
C666 0.1u/16V_4
C667 0.1u/16V_4
HUB_USB_A1_SSTX_P {34}
HUB_USB_A1_SSTX_N {34}
DSP2_PWR
OCP2
USB_A1_OC_ODL
HUB_EN_USB_A1_5V_L {34}
USB_A1_OC_ODL {10,34}
XTLI
XTLO
XTAL_IN
XTAL_OUT
Q62
{10} PCH_I2C_HUB_SCL
PP1800_S0
PMZB290UNE
PMZB290UNE
{10} PCH_I2C_HUB_SDA
Q63
PP3300_A
R594 10K_5%_2
R595 10K_5%_2
SPWR_DET
BUF_HUB_RST_L
PP3300_A
R257 10K_5%_2
HUB_CS_L
MISO
MOSI
SCK
SCS
SPWR_DET
BPWR_DET
RREF
{10} HUB_RST
Q13
PMZB290UNE
R40611 100K_1%_2
R597 *10K_5%_2
DNS
R596 6.2K_1%_4
RTS5416-GR
Y4
GND2
HOT2
HOT1
GND1
12MHz 8Z12000006
XTAL_OUT
XTAL_IN
C656 22p/50V_4
C660 22p/50V_4
PP1200_HUB
PP3300_A
U52B
AV12_1
AV12_2
AV12_3
AV12_4
AV12_5
AV12_6
AV12_7
DV12_1
DV12_2
DV12_3
V33_OUT
LDO_V5_IN
SWR_5V_IN
DV33_1
DV33_2
DV33_3
DV33_4
SWR_OUT
GND_0
EPAD
PGND
RTS5416-GR
C645 4.7u/6.3V_4
C648 0.1u/16V_4
C651 0.1u/16V_4
C657 1000p/16V_4
C661 1000p/16V_4
C646 0.1u/16V_4
C649 0.1u/16V_4
C654 0.1u/16V_4
C659 0.1u/16V_4
C663 1000p/16V_4
PP3300_A
C647 4.7u/6.3V_4
C650 0.1u/16V_4
C655 0.1u/16V_4
C658 0.1u/16V_4
C662 1000p/16V_4
C227 0.1u/16V_4
C232 4.7u/10V_4
EOD
C228 0.1u/16V_4
C236 10u/6.3V_4
C229 0.1u/16V_4
C241 10u/6.3V_4
PP1200_HUB
HUB_SWR_OUT
L4
4.7uH_4x4x1.8
C266 10u/6.3V_6

I2C ADDR: 7'H6A

change PN for purchasing agent suggest

Quanta Computer Inc.
PROJECT : GRUNT

Size	Document Number	Rev
	USB3 HUB	2A

Date: Wednesday, November 14, 2018 Sheet 26 of 35

INTERSIL BUCK - BOOST CHARGER

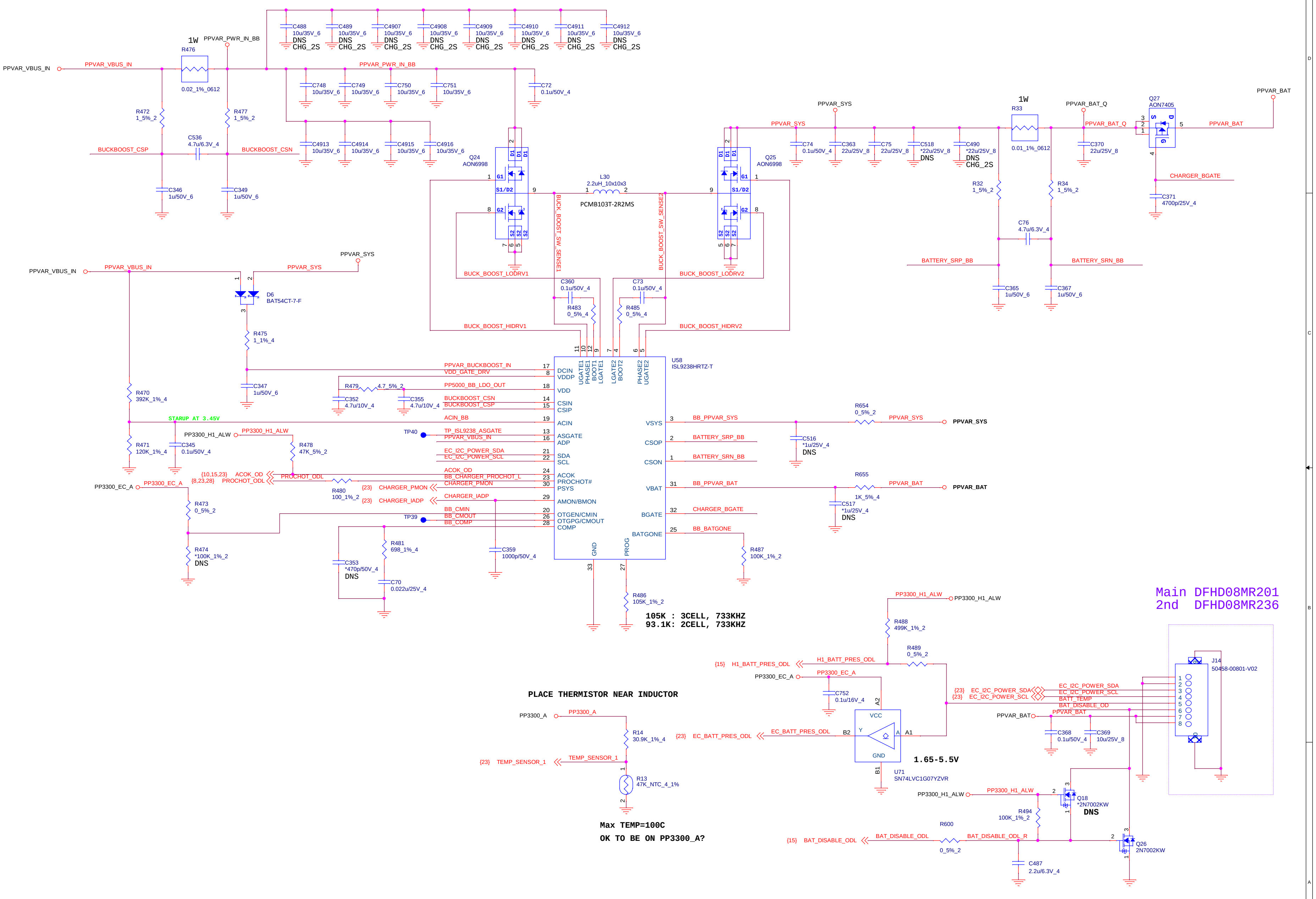
PPVAR_VBUS_IN
PPVAR_VBUS_IN
1W
R476
0.02_1%_0612
PPVAR_PWR_IN_BB
PPVAR_PWR_IN_BB
C488 10u/35V_6 DNS CHG_2S
C489 10u/35V_6 DNS CHG_2S
C4907 10u/35V_6 DNS CHG_2S
C4908 10u/35V_6 DNS CHG_2S
C4909 10u/35V_6 DNS CHG_2S
C4910 10u/35V_6 DNS CHG_2S
C4911 10u/35V_6 DNS CHG_2S
C4912 10u/35V_6 DNS CHG_2S
C748 10u/35V_6
C749 10u/35V_6
C750 10u/35V_6
C751 10u/35V_6
C72 0.1u/50V_4
R472 1_5%_2
R477 1_5%_2
C536 4.7u/6.3V_4
BUCKBOOST_CSP
BUCKBOOST_CSN
C4913 10u/35V_6
C4914 10u/35V_6
C4915 10u/35V_6
C4916 10u/35V_6
C346 1u/50V_6
C349 1u/50V_6
Q24 AON6998
Q25 AON6998
L30 2.2uH_10x10x3
PCMB103T-2R2MS
BUCK_BOOST_SW_SENSE1
BUCK_BOOST_SW_SENSE2
BUCK_BOOST_LODRV1
BUCK_BOOST_LODRV2
BUCK_BOOST_HIDRV1
BUCK_BOOST_HIDRV2
C360 0.1u/50V_4
C73 0.1u/50V_4
R483 0_5%_4
R485 0_5%_4
PPVAR_SYS
C74 0.1u/50V_4
C363 22u/25V_8
C75 22u/25V_8
C518 *22u/25V_8 DNS
C490 *22u/25V_8 DNS CHG_2S
1W
R33
0.01_1%_0612
PPVAR_BAT_Q
PPVAR_BAT_Q
Q27 AON7405
PPVAR_BAT
PPVAR_BAT
C370 22u/25V_8
CHARGER_BGATE
C371 4700p/25V_4
R32 1_5%_2
R34 1_5%_2
C76 4.7u/6.3V_4
BATTERY_SRP_BB
BATTERY_SRN_BB
C365 1u/50V_6
C367 1u/50V_6
PPVAR_VBUS_IN
PPVAR_SYS
PPVAR_SYS
D6 BAT54CT-7-F
R475 1_1%_4
C347 1u/50V_6
R470 392K_1%_4
STARUP AT 3.45V
R471 120K_1%_4
C345 0.1u/50V_4
PP3300_H1_ALW
PP3300_H1_ALW
R478 47K_5%_2
{10,15,23} ACOK_OD
{8,23,28} PROCHOT_ODL
PROCHOT_ODL
R480 100_1%_2
{23} CHARGER_PMON
{23} CHARGER_IADP
PP3300_EC_A
PP3300_EC_A
R473 0_5%_2
R474 *100K_1%_2 DNS
R479 4.7_5%_2
C352 4.7u/10V_4
C355 4.7u/10V_4
TP40
TP39
R481 698_1%_4
C353 *470p/50V_4 DNS
C70 0.022u/25V_4
C359 1000p/50V_4
PPVAR_BUCKBOOST_IN
VDD_GATE_DRV
PP5000_BB_LDO_OUT
BUCKBOOST_CSN
BUCKBOOST_CSP
ACIN_BB
TP_ISL9238_ASGATE
PPVAR_VBUS_IN
EC_I2C_POWER_SDA
EC_I2C_POWER_SCL
ACOK_OD
BB_CHARGER_PROCHOT_L
CHARGER_PMON
CHARGER_IADP
BB_CMIN
BB_CMOUT
BB_COMP
U58 ISL9238HRTZ-T
DCIN VDDP VDD CSIN CSIP ACIN ASGATE ADP SDA SCL ACOK PROCHOT# PSYS AMON/BMON OTGEN/CMIN OTGPG/CMOUT COMP
UGATE1 PHASE1 BOOT1 LGATE1 LGATE2 BOOT2 PHASE2 UGATE2
VSYS CSOP CSON VBAT BGATE BATGONE GND PROG
BB_PPVAR_SYS
BATTERY_SRP_BB
BATTERY_SRN_BB
BB_PPVAR_BAT
CHARGER_BGATE
BB_BATGONE
R654 0_5%_2
PPVAR_SYS
PPVAR_SYS
C516 *1u/25V_4 DNS
R655 1K_5%_4
PPVAR_BAT
PPVAR_BAT
C517 *1u/25V_4 DNS
R487 100K_1%_2
R486 105K_1%_2
PP3300_H1_ALW
PP3300_H1_ALW
R488 499K_1%_2
R489 0_5%_2
{15} H1_BATT_PRES_ODL
H1_BATT_PRES_ODL
PP3300_EC_A
PP3300_EC_A
C752 0.1u/16V_4
VCC Y A GND
A2 B2 A1 B1
U71 SN74LVC1G07YZVR
{23} EC_BATT_PRES_ODL
EC_BATT_PRES_ODL
PP3300_A
PP3300_A
R14 30.9K_1%_4
{23} TEMP_SENSOR_1
TEMP_SENSOR_1
R13 47K_NTC_4_1%
{23} EC_I2C_POWER_SDA
{23} EC_I2C_POWER_SCL
EC_I2C_POWER_SDA
EC_I2C_POWER_SCL
BATT_TEMP
BAT_DISABLE_OD
PPVAR_BAT
PPVAR_BAT
C368 0.1u/50V_4
C369 10u/25V_8
J14 50458-00801-V02
PP3300_H1_ALW
PP3300_H1_ALW
Q18 *2N7002KW DNS
R494 100K_1%_2
R600 0_5%_2
{15} BAT_DISABLE_ODL
BAT_DISABLE_ODL
BAT_DISABLE_ODL_R
C487 2.2u/6.3V_4
Q26 2N7002KW

105K : 3CELL, 733KHZ
93.1K: 2CELL, 733KHZ

PLACE THERMISTOR NEAR INDUCTOR

1.65-5.5V

Max TEMP=100C

OK TO BE ON PP3300_A?

Main DFHD08MR201
2nd DFHD08MR236

Quanta Computer Inc.

PROJECT :

Size | Document Number | Rev
POWER - BATTERY CHARGER | 2A
Date: Wednesday, November 14, 2018 | Sheet 27 of 35

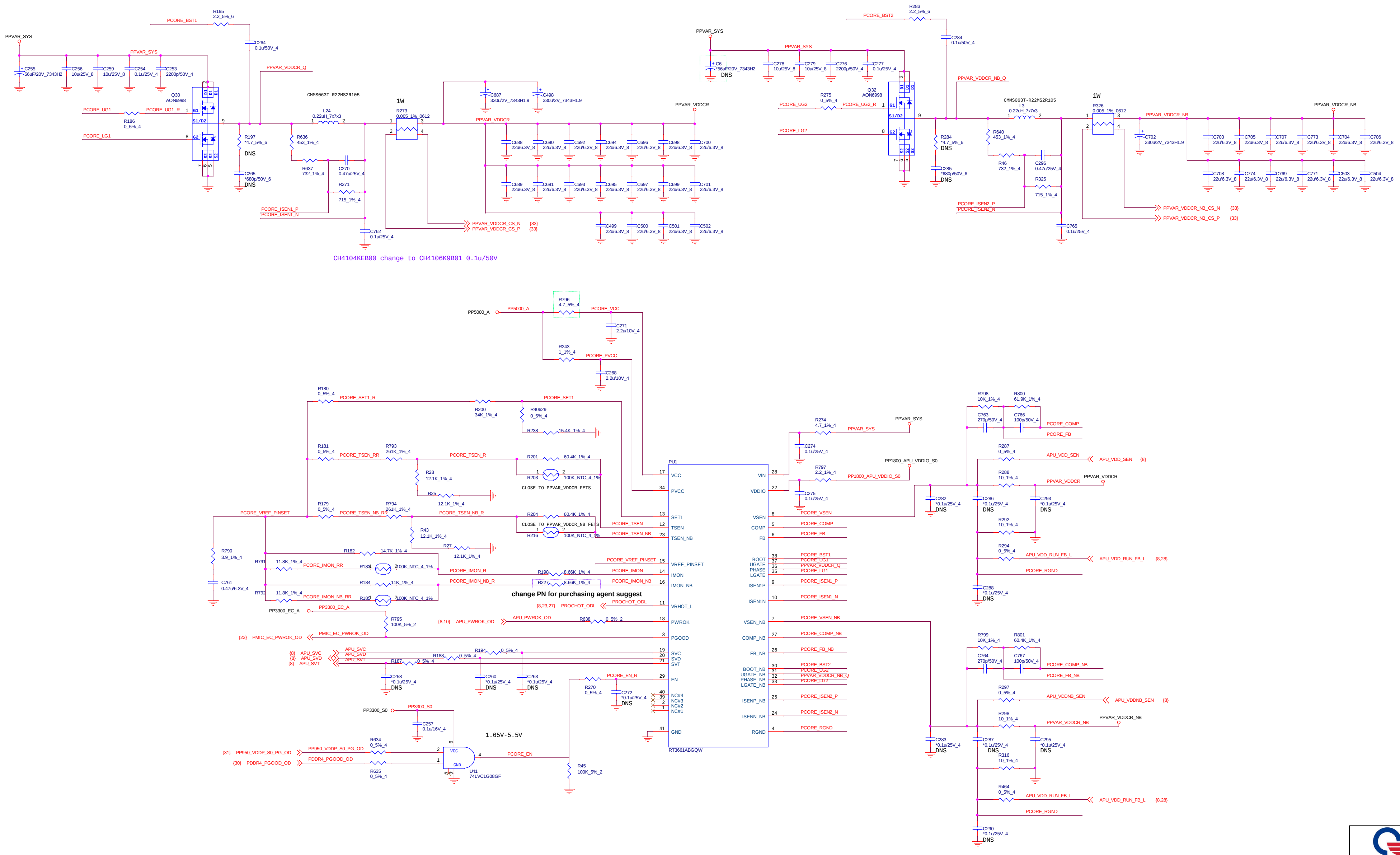
PPVAR_SYS
PCORE_BST1
R195 2.2_5%_6
C264 0.1u/50V_4
PPVAR_VDDCR_Q
C255 56uF/20V_7343H2
C256 10u/25V_8
C259 10u/25V_8
C254 0.1u/25V_4
C253 2200p/50V_4
Q30 AON6998
PCORE_UG1
PCORE_UG1_R
R186 0_5%_4
PCORE_LG1
R197 *4.7_5%_6 DNS
C265 *680p/50V_6 DNS
CMMS063T-R22MS2R105
L24 0.22uH_7x7x3
R636 453_1%_4
R637 732_1%_4
C270 0.47u/25V_4
R271 715_1%_4
PCORE_ISEN1_P
PCORE_ISEN1_N
C762 0.1u/25V_4
1W
R273 0.005_1%_0612
PPVAR_VDDCR
C687 330u/2V_7343H1.9
C498 330u/2V_7343H1.9
C688 22u/6.3V_8
C689 22u/6.3V_8
C499 22u/6.3V_8
C500 22u/6.3V_8
C501 22u/6.3V_8
C502 22u/6.3V_8
PPVAR_VDDCR_CS_N (33)
PPVAR_VDDCR_CS_P (33)
CH4104KEB00 change to CH4106K9B01 0.1u/50V
PCORE_BST2
R283 2.2_5%_6
C284 0.1u/50V_4
C6 *56uF/20V_7343H2 DNS
C278 10u/25V_8
C279 10u/25V_8
C276 2200p/50V_4
C277 0.1u/25V_4
PPVAR_VDDCR_NB_Q
PCORE_UG2
R275 0_5%_4
PCORE_UG2_R
Q32 AON6998
PCORE_LG2
R284 *4.7_5%_6 DNS
C285 *680p/50V_6 DNS
L3 0.22uH_7x7x3
R640 453_1%_4
R46 732_1%_4
C296 0.47u/25V_4
R325 715_1%_4
PCORE_ISEN2_P
PCORE_ISEN2_N
C765 0.1u/25V_4
R326 0.005_1%_0612
PPVAR_VDDCR_NB
C702 330u/2V_7343H1.9
PPVAR_VDDCR_NB_CS_N (33)
PPVAR_VDDCR_NB_CS_P (33)
PP5000_A
R796 4.7_5%_4
PCORE_VCC
C271 2.2u/10V_4
R243 1_1%_4
PCORE_PVCC
C268 2.2u/10V_4
R180 0_5%_4
PCORE_SET1_R
R200 34K_1%_4
R40629 0_5%_4
PCORE_SET1
R238 15.4K_1%_4
R181 0_5%_4
PCORE_TSEN_RR
R793 261K_1%_4
PCORE_TSEN_R
R201 60.4K_1%_4
R28 12.1K_1%_4
R203 100K_NTC_4_1%
R25 12.1K_1%_4
CLOSE TO PPVAR_VDDCR FETS
R179 0_5%_4
PCORE_VREF_PINSET
PCORE_TSEN_NB_RR
R794 261K_1%_4
PCORE_TSEN_NB_R
R204 60.4K_1%_4
CLOSE TO PPVAR_VDDCR_NB FETS
R216 100K_NTC_4_1%
R43 12.1K_1%_4
R27 12.1K_1%_4
R790 3.9_1%_4
C761 0.47u/6.3V_4
R791 11.8K_1%_4
PCORE_IMON_RR
R182 14.7K_1%_4
R183 100K_NTC_4_1%
PCORE_IMON_R
R198 8.66K_1%_4
R792 11.8K_1%_4
PCORE_IMON_NB_RR
R184 11K_1%_4
R185 100K_NTC_4_1%
PCORE_IMON_NB_R
R227 8.66K_1%_4
change PN for purchasing agent suggest
PP3300_EC_A
R795 100K_5%_2
(8,23,27) PROCHOT_ODL
(8,10) APU_PWROK_OD
R638 0_5%_2
(23) PMIC_EC_PWROK_OD
(8) APU_SVC
(8) APU_SVD
(8) APU_SVT
R194 0_5%_4
R188 0_5%_4
R187 0_5%_4
C258 *0.1u/25V_4 DNS
C260 *0.1u/25V_4 DNS
C263 *0.1u/25V_4 DNS
PCORE_EN_R
R270 0_5%_4
C272 *0.1u/25V_4 DNS
PP3300_S0
C257 0.1u/16V_4
1.65V-5.5V
(31) PP950_VDDP_S0_PG_OD
(30) PDDR4_PGOOD_OD
R634 0_5%_4
R635 0_5%_4
U41 74LVC1G08GF
PCORE_EN
R45 100K_5%_2
PU1
VCC
PVCC
SET1
TSEN
TSEN_NB
VREF_PINSET
IMON
IMON_NB
VRHOT_L
PWROK
PGOOD
SVC
SVD
SVT
EN
NC#4
NC#3
NC#2
NC#1
GND
VIN
VDDIO
VSEN
COMP
FB
BOOT
UGATE
PHASE
LGATE
ISEN1P
ISEN1N
VSEN_NB
COMP_NB
FB_NB
BOOT_NB
UGATE_NB
PHASE_NB
LGATE_NB
ISENP_NB
ISENN_NB
RGND
RT3661ABGQW
R274 4.7_1%_4
C274 0.1u/25V_4
R797 2.2_1%_4
PP1800_APU_VDDIO_S0
C275 0.1u/25V_4
PCORE_VSEN
PCORE_COMP
PCORE_FB
PCORE_VSEN_NB
PCORE_COMP_NB
PCORE_FB_NB
PCORE_RGND
R798 10K_1%_4
R800 61.9K_1%_4
C763 270p/50V_4
C766 100p/50V_4
R287 0_5%_4
APU_VDD_SEN (8)
R288 10_1%_4
C282 *0.1u/25V_4 DNS
C286 *0.1u/25V_4 DNS
C293 *0.1u/25V_4 DNS
R292 10_1%_4
R294 0_5%_4
APU_VDD_RUN_FB_L (8,28)
C288 *0.1u/25V_4 DNS
R799 10K_1%_4
R801 60.4K_1%_4
C764 270p/50V_4
C767 100p/50V_4
R297 0_5%_4
APU_VDDNB_SEN (8)
R298 10_1%_4
C283 *0.1u/25V_4 DNS
C287 *0.1u/25V_4 DNS
C295 *0.1u/25V_4 DNS
R316 10_1%_4
R464 0_5%_4
C290 *0.1u/25V_4 DNS

Quanta Computer Inc.

PROJECT :

Size	Document Number	Rev
	POWER - FT4 CORE	2A

Date: Wednesday, November 14, 2018 Sheet 28 of 35

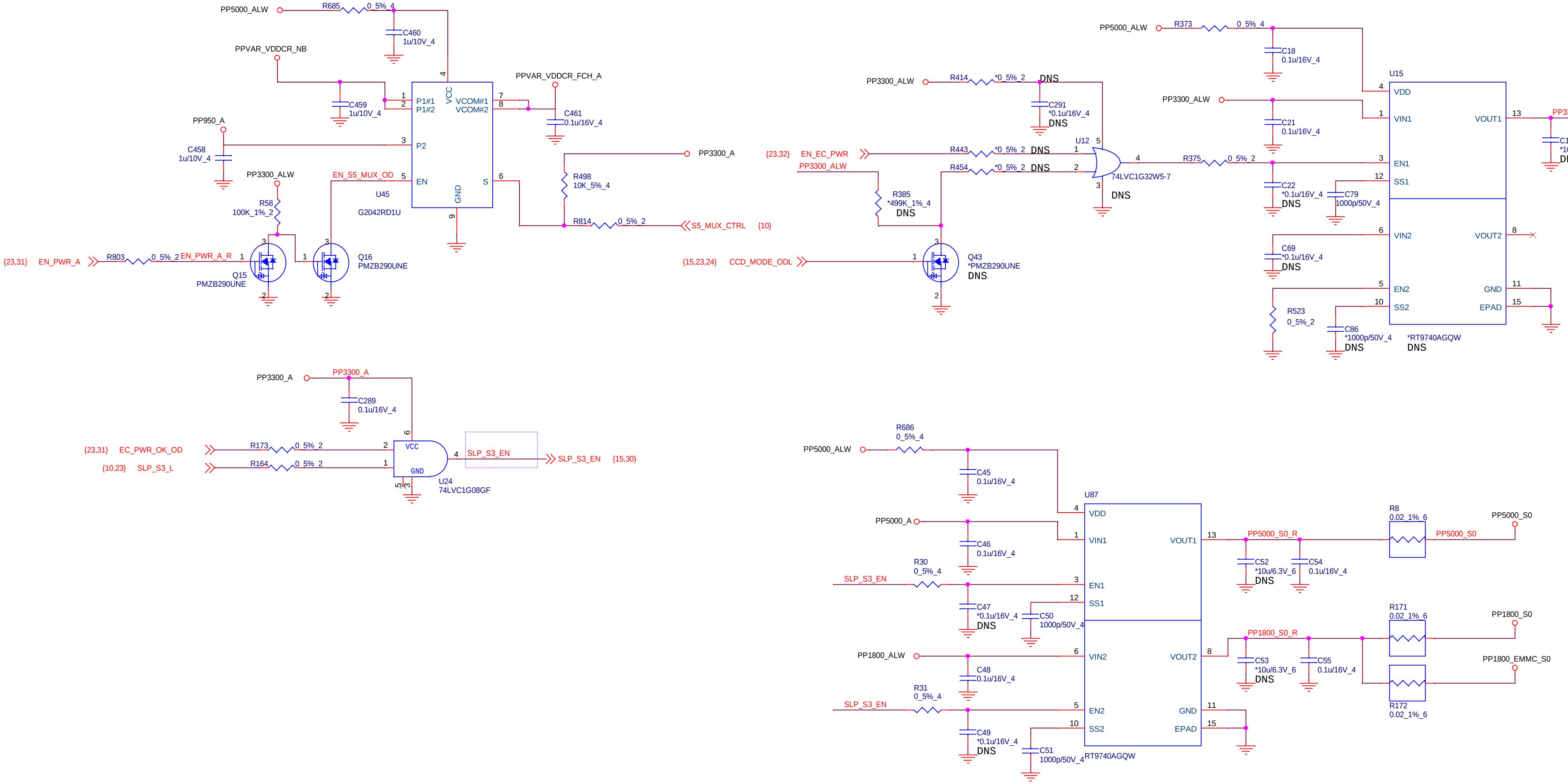
PP5000_ALW
R685
0_5%_4
C460
1u/10V_4
PPVAR_VDDCR_NB
C459
1u/10V_4
PP950_A
C458
1u/10V_4
PPVAR_VDDCR_FCH_A
C461
0.1u/16V_4
P1#1
P1#2
VCC
VCOM#1
VCOM#2
P2
EN
S
GND
U45
G2042RD1U
PP3300_A
R498
10K_5%_4
R814
0_5%_2
S5_MUX_CTRL
{10}
PP3300_ALW
EN_S5_MUX_OD
R58
100K_1%_2
{23,31}
EN_PWR_A
R803
0_5%_2
EN_PWR_A_R
Q15
PMZB290UNE
Q16
PMZB290UNE
PP3300_ALW
R414
*0_5%_2
DNS
C291
*0.1u/16V_4
DNS
{23,32}
EN_EC_PWR
PP3300_ALW
R443
*0_5%_2
DNS
R454
*0_5%_2
DNS
U12
74LVC1G32W5-7
DNS
R385
*499K_1%_4
DNS
{15,23,24}
CCD_MODE_ODL
Q43
*PMZB290UNE
DNS
PP5000_ALW
R373
0_5%_4
C18
0.1u/16V_4
PP3300_ALW
C21
0.1u/16V_4
R375
0_5%_2
C22
*0.1u/16V_4
DNS
C79
1000p/50V_4
C69
*0.1u/16V_4
DNS
R523
0_5%_2
C86
*1000p/50V_4
DNS
U15
VDD
VIN1
EN1
SS1
VIN2
EN2
SS2
VOUT1
VOUT2
GND
EPAD
*RT9740AGQW
DNS
PP3300_PPC_R
C145
*10u/6.3V_6
DNS
C197
*0.1u/16V_4
DNS
R374
*0.02_1%_6
DNS
PP3300_PPC
PP3300_A
PP3300_A
C289
0.1u/16V_4
{23,31}
EC_PWR_OK_OD
R173
0_5%_2
{10,23}
SLP_S3_L
R164
0_5%_2
VCC
GND
U24
74LVC1G08GF
SLP_S3_EN
SLP_S3_EN
{15,30}
PP5000_ALW
R686
0_5%_4
C45
0.1u/16V_4
U87
PP5000_A
C46
0.1u/16V_4
SLP_S3_EN
R30
0_5%_4
C47
*0.1u/16V_4
DNS
C50
1000p/50V_4
PP1800_ALW
C48
0.1u/16V_4
SLP_S3_EN
R31
0_5%_4
C49
*0.1u/16V_4
DNS
C51
1000p/50V_4
RT9740AGQW
VDD
VIN1
EN1
SS1
VIN2
EN2
SS2
VOUT1
VOUT2
GND
EPAD
PP5000_S0_R
C52
*10u/6.3V_6
DNS
C54
0.1u/16V_4
R8
0.02_1%_6
PP5000_S0
PP5000_S0
PP1800_S0_R
C53
*10u/6.3V_6
DNS
C55
0.1u/16V_4
R171
0.02_1%_6
PP1800_S0
R172
0.02_1%_6
PP1800_EMMC_S0

Quanta Computer Inc.

PROJECT :

Size	Document Number	Rev
	POWER - FT4 CORE SWITCHES	2A

Date: Wednesday, November 14, 2018 Sheet 29 of 35

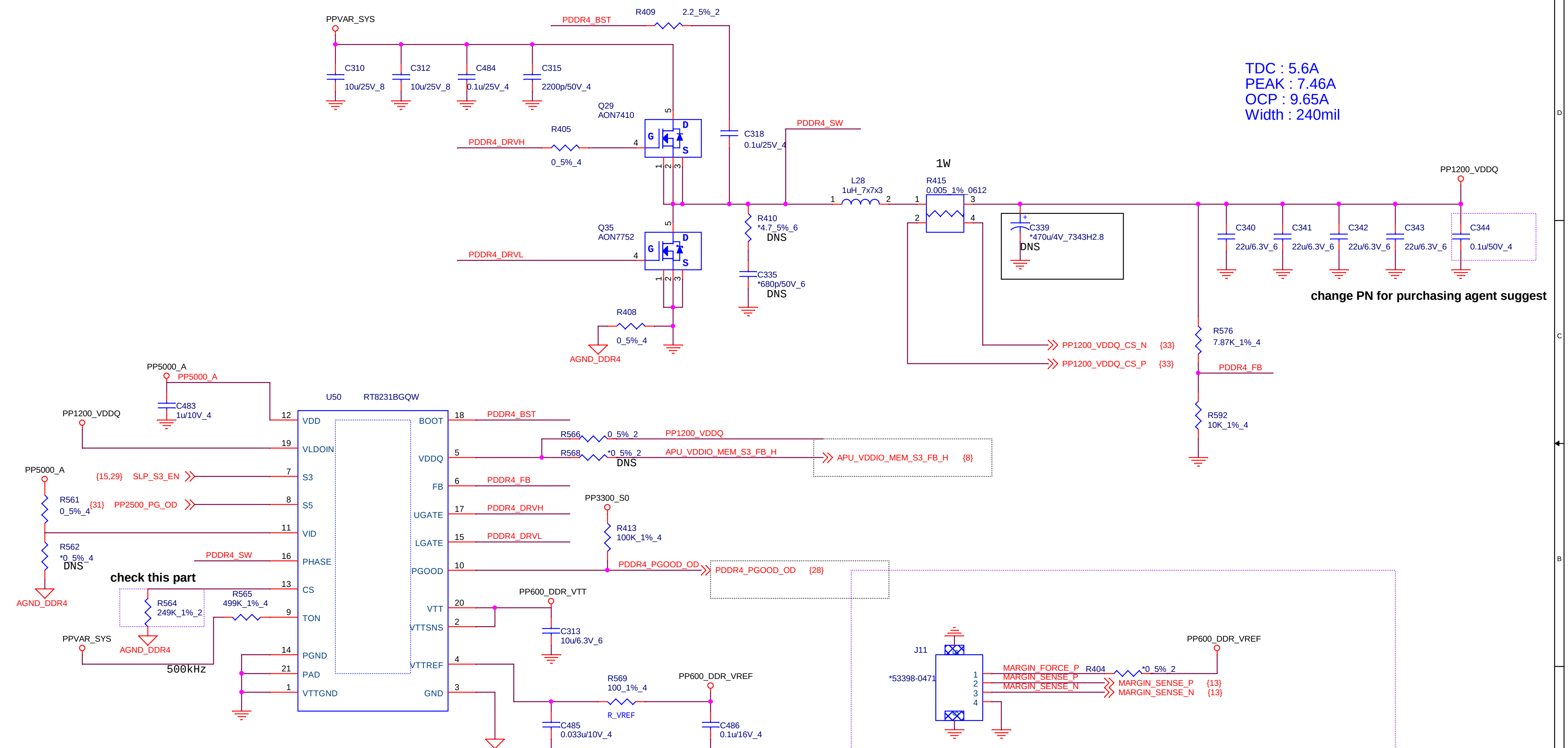

PPVAR_SYS
C310 10u/25V_8
C312 10u/25V_8
C484 0.1u/25V_4
C315 2200p/50V_4
PDDR4_BST
R409 2.2_5%_2
Q29 AON7410
G D S
5 4 1 2 3
PDDR4_DRVH
R405 0_5%_4
C318 0.1u/25V_4
PDDR4_SW
Q35 AON7752
PDDR4_DRVL
R410 *4.7_5%_6 DNS
C335 *680p/50V_6 DNS
R408 0_5%_4
AGND_DDR4
L28 1uH_7x7x3
1W
R415 0.005_1%_0612
1 2 3 4
C339 *470u/4V_7343H2.8 DNS
TDC : 5.6A
PEAK : 7.46A
OCP : 9.65A
Width : 240mil
PP1200_VDDQ
C340 22u/6.3V_6
C341 22u/6.3V_6
C342 22u/6.3V_6
C343 22u/6.3V_6
C344 0.1u/50V_4
change PN for purchasing agent suggest
PP1200_VDDQ_CS_N {33}
PP1200_VDDQ_CS_P {33}
R576 7.87K_1%_4
PDDR4_FB
R592 10K_1%_4
PP5000_A
C483 1u/10V_4
U50 RT8231BGQW
VDD 12
VLDOIN 19
S3 7
S5 8
VID 11
PHASE 16
CS 13
TON 9
PGND 14
PAD 21
VTTGND 1
BOOT 18
VDDQ 5
FB 6
UGATE 17
LGATE 15
PGOOD 10
VTT 20
VTTSNS 2
VTTREF 4
GND 3
PDDR4_BST
R566 0_5%_2
PP1200_VDDQ
R568 *0_5%_2 DNS
APU_VDDIO_MEM_S3_FB_H
APU_VDDIO_MEM_S3_FB_H {8}
PDDR4_FB
PDDR4_DRVH
PDDR4_DRVL
PP3300_S0
R413 100K_1%_4
PDDR4_PGOOD_OD
PDDR4_PGOOD_OD {28}
PP1200_VDDQ
PP5000_A
{15,29} SLP_S3_EN
R561 0_5%_4
{31} PP2500_PG_OD
R562 *0_5%_4 DNS
AGND_DDR4
PDDR4_SW
check this part
R564 249K_1%_2
R565 499K_1%_4
AGND_DDR4
PPVAR_SYS
500kHz
PP600_DDR_VTT
C313 10u/6.3V_6
R569 100_1%_4
R_VREF
PP600_DDR_VREF
C485 0.033u/10V_4
C486 0.1u/16V_4
AGND_DDR4
J11
*53398-0471
1 2 3 4
MARGIN_FORCE_P
MARGIN_SENSE_P
MARGIN_SENSE_N
R404 *0_5%_2
PP600_DDR_VREF
MARGIN_SENSE_P {13}
MARGIN_SENSE_N {13}
5 4 3 2 1
D C B A

VID	REF VOLTAGE
HIGH	0.675V
LOW	0.75V

Quanta Computer Inc.

PROJECT :

Size
Document Number
POWER - DDR4
Rev
2A
Date: Wednesday, November 14, 2018
Sheet 30 of 35

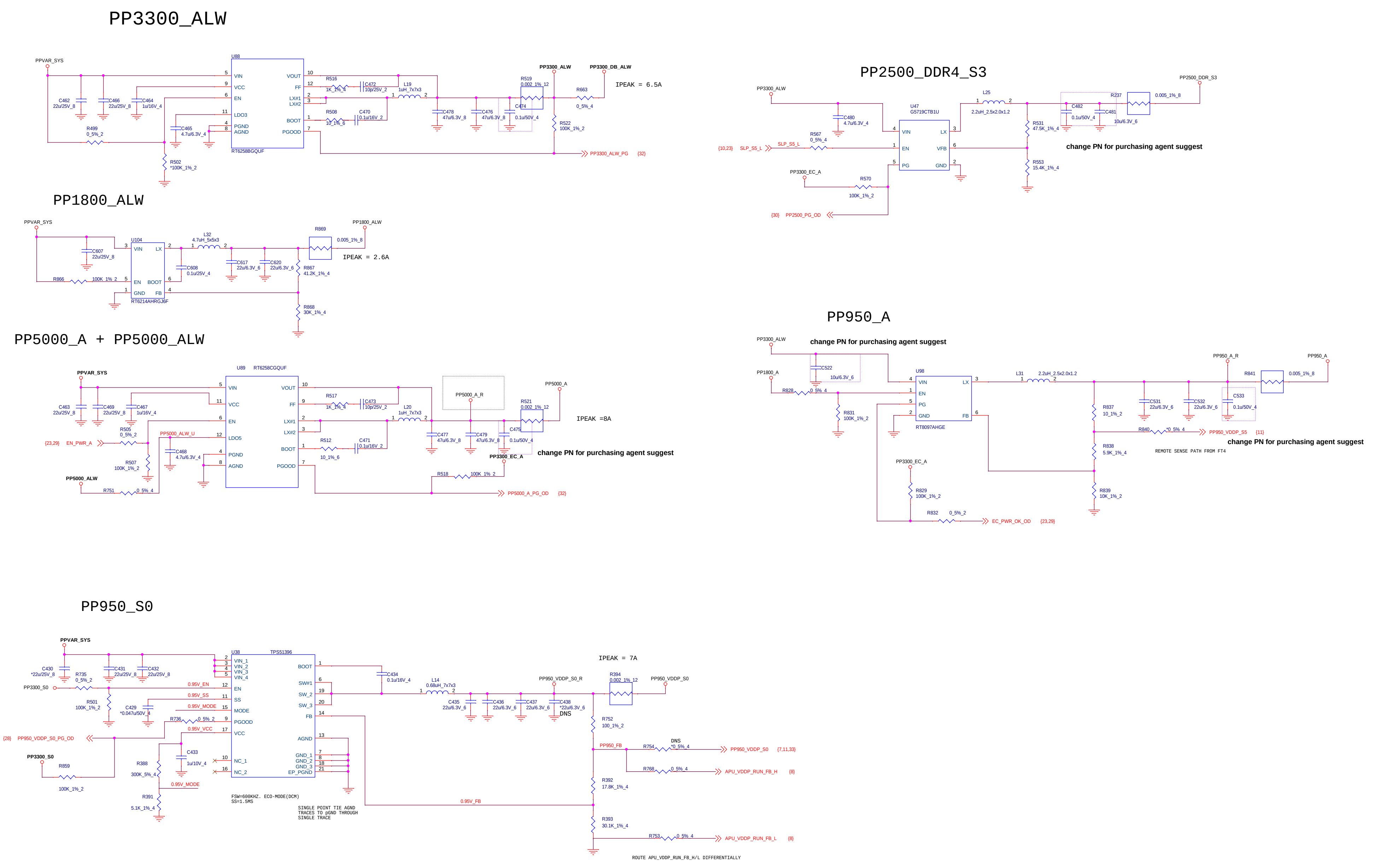
PP3300_ALW
PPVAR_SYS
U88
RT6258BGQUF
VIN
VCC
EN
LDO3
PGND
AGND
VOUT
FF
LX#1
LX#2
BOOT
PGOOD
C462 22u/25V_8
C466 22u/25V_8
C464 1u/16V_4
C465 4.7u/6.3V_4
R499 0_5%_2
R502 *100K_1%_2
R516 1K_1%_4
C472 10p/25V_2
L19 1uH_7x7x3
R508 10_1%_6
C470 0.1u/16V_2
C478 47u/6.3V_8
C476 47u/6.3V_8
C474 0.1u/50V_4
R519 0.002_1%_12
R522 100K_1%_2
PP3300_ALW
PP3300_DB_ALW
R663 0_5%_4
IPEAK = 6.5A
PP3300_ALW_PG [32]
PP1800_ALW
PPVAR_SYS
U104
RT6214AHRGJ6F
VIN
LX
EN
BOOT
GND
FB
C607 22u/25V_8
R866 100K_1%_2
L32 4.7uH_5x5x3
C608 0.1u/25V_4
C617 22u/6.3V_6
C620 22u/6.3V_6
R867 41.2K_1%_4
R868 30K_1%_4
R869 0.005_1%_8
PP1800_ALW
IPEAK = 2.6A
PP5000_A + PP5000_ALW
PPVAR_SYS
U89 RT6258CGQUF
C463 22u/25V_8
C469 22u/25V_8
C467 1u/16V_4
R505 0_5%_2
{23,29} EN_PWR_A
R507 100K_1%_2
PP5000_ALW_U
C468 4.7u/6.3V_4
PP5000_ALW
R751 0_5%_4
R517 1K_1%_4
C473 10p/25V_2
L20 1uH_7x7x3
R512 10_1%_6
C471 0.1u/16V_2
C477 47u/6.3V_8
C479 47u/6.3V_8
C475 0.1u/50V_4
PP5000_A_R
R521 0.002_1%_12
PP5000_A
IPEAK =8A
PP3300_EC_A
change PN for purchasing agent suggest
R518 100K_1%_2
PP5000_A_PG_OD [32]
PP950_S0
PPVAR_SYS
U38 TPS51396
VIN_1
VIN_2
VIN_3
VIN_4
EN
SS
MODE
PGOOD
VCC
NC_1
NC_2
BOOT
SW#1
SW_2
SW_3
FB
AGND
GND_1
GND_2
GND_3
EP_PGND
C430 *22u/25V_8
R735 0_5%_2
C431 22u/25V_8
C432 22u/25V_8
PP3300_S0
0.95V_EN
0.95V_SS
0.95V_MODE
0.95V_VCC
R501 100K_1%_2
C429 *0.047u/50V_4
R736 0_5%_2
{28} PP950_VDDP_S0_PG_OD
PP3300_S0
R859 100K_1%_2
R388 300K_5%_4
C433 1u/10V_4
R391 5.1K_1%_4
FSW=600KHZ. ECO-MODE(DCM)
SS=1.5MS
SINGLE POINT TIE AGND TRACES TO pGND THROUGH SINGLE TRACE
C434 0.1u/16V_4
L14 0.68uH_7x7x3
C435 22u/6.3V_6
C436 22u/6.3V_6
C437 22u/6.3V_6
C438 *22u/6.3V_6
DNS
PP950_VDDP_S0_R
R394 0.002_1%_12
PP950_VDDP_S0
IPEAK = 7A
R752 100_1%_2
PP950_FB
R754 DNS *0_5%_4
PP950_VDDP_S0 {7,11,33}
R768 0_5%_4
APU_VDDP_RUN_FB_H {8}
R392 17.8K_1%_4
0.95V_FB
R393 30.1K_1%_4
R753 0_5%_4
APU_VDDP_RUN_FB_L {8}
ROUTE APU_VDDP_RUN_FB_H/L DIFFERENTIALLY
PP2500_DDR4_S3
PP3300_ALW
C480 4.7u/6.3V_4
U47 G5719CTB1U
VIN
EN
PG
LX
VFB
GND
{10,23} SLP_S5_L
R567 0_5%_4
PP3300_EC_A
R570 100K_1%_2
{30} PP2500_PG_OD
L25 2.2uH_2.5x2.0x1.2
R531 47.5K_1%_4
R553 15.4K_1%_4
C482 0.1u/50V_4
C481 10u/6.3V_6
R237 0.005_1%_8
PP2500_DDR_S3
change PN for purchasing agent suggest
PP950_A
PP3300_ALW
change PN for purchasing agent suggest
C522 10u/6.3V_6
PP1800_A
R828 0_5%_4
R831 100K_1%_2
U98 RT8097AHGE
VIN
EN
PG
GND
LX
FB
L31 2.2uH_2.5x2.0x1.2
R837 10_1%_2
C531 22u/6.3V_6
C532 22u/6.3V_6
C533 0.1u/50V_4
PP950_A_R
R841 0.005_1%_8
PP950_A
R840 *0_5%_4
PP950_VDDP_S5 {11}
change PN for purchasing agent suggest
REMOTE SENSE PATH FROM FT4
R838 5.9K_1%_4
PP3300_EC_A
R829 100K_1%_2
R839 10K_1%_2
R832 0_5%_2
EC_PWR_OK_OD {23,29}

Quanta Computer Inc.

PROJECT :

Size	Document Number	Rev
	POWER - 1.8V, 3.3V, 5V	2A

Date: Wednesday, November 14, 2018 Sheet 31 of 35

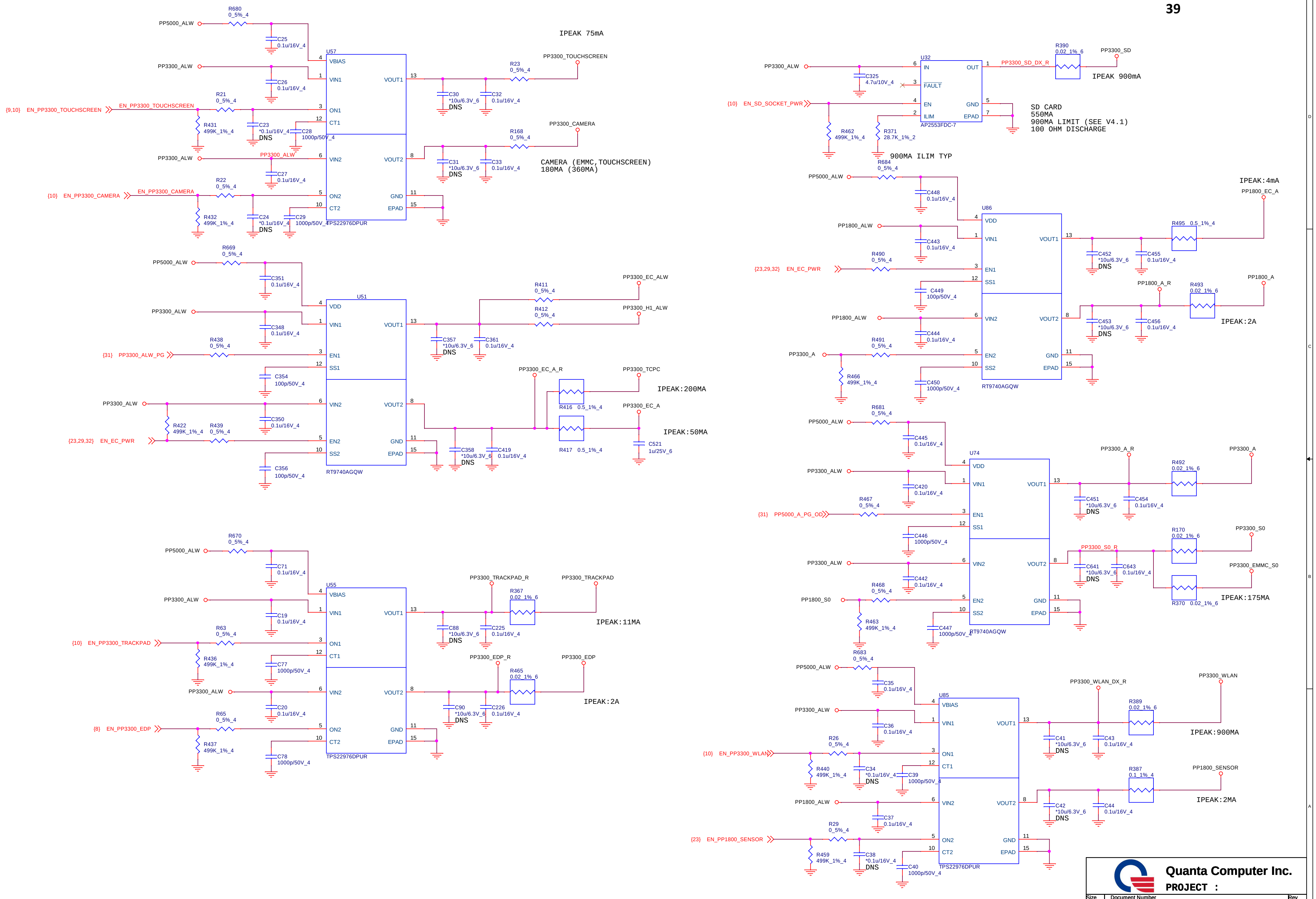
PP5000_ALW
R680
0_5%_4
C25
0.1u/16V_4
PP3300_ALW
C26
0.1u/16V_4
U57
VBIAS
VIN1
ON1
CT1
VIN2
ON2
CT2
VOUT1
VOUT2
GND
EPAD
TPS22976DPUR
R21
0_5%_4
{9,10} EN_PP3300_TOUCHSCREEN
EN_PP3300_TOUCHSCREEN
R431
499K_1%_4
C23
*0.1u/16V_4
DNS
C28
1000p/50V_4
PP3300_ALW
C27
0.1u/16V_4
R22
0_5%_4
{10} EN_PP3300_CAMERA
EN_PP3300_CAMERA
R432
499K_1%_4
C24
*0.1u/16V_4
DNS
C29
1000p/50V_4
IPEAK 75mA
PP3300_TOUCHSCREEN
R23
0_5%_4
C30
*10u/6.3V_6
DNS
C32
0.1u/16V_4
PP3300_CAMERA
R168
0_5%_4
C31
*10u/6.3V_6
DNS
C33
0.1u/16V_4
CAMERA (EMMC,TOUCHSCREEN)
180MA (360MA)
R669
0_5%_4
PP5000_ALW
C351
0.1u/16V_4
PP3300_ALW
C348
0.1u/16V_4
U51
VDD
VIN1
EN1
SS1
VIN2
EN2
SS2
VOUT1
VOUT2
GND
EPAD
RT9740AGQW
R438
0_5%_4
{31} PP3300_ALW_PG
C354
100p/50V_4
PP3300_ALW
C350
0.1u/16V_4
R422
499K_1%_4
R439
0_5%_4
{23,29,32} EN_EC_PWR
C356
100p/50V_4
C357
*10u/6.3V_6
DNS
C361
0.1u/16V_4
R411
0_5%_4
PP3300_EC_ALW
R412
0_5%_4
PP3300_H1_ALW
PP3300_EC_A_R
PP3300_TCPC
R416 0.5_1%_4
IPEAK:200MA
PP3300_EC_A
R417 0.5_1%_4
IPEAK:50MA
C358
*10u/6.3V_6
DNS
C419
0.1u/16V_4
C521
1u/25V_6
R670
0_5%_4
PP5000_ALW
C71
0.1u/16V_4
PP3300_ALW
C19
0.1u/16V_4
R63
0_5%_4
{10} EN_PP3300_TRACKPAD
R436
499K_1%_4
C77
1000p/50V_4
U55
VBIAS
VIN1
ON1
CT1
VIN2
ON2
CT2
VOUT1
VOUT2
GND
EPAD
TPS22976DPUR
PP3300_ALW
C20
0.1u/16V_4
R65
0_5%_4
{8} EN_PP3300_EDP
R437
499K_1%_4
C78
1000p/50V_4
PP3300_TRACKPAD_R
R367
0.02_1%_6
PP3300_TRACKPAD
C88
*10u/6.3V_6
DNS
C225
0.1u/16V_4
IPEAK:11MA
PP3300_EDP_R
R465
0.02_1%_6
PP3300_EDP
C90
*10u/6.3V_6
DNS
C226
0.1u/16V_4
IPEAK:2A
PP3300_ALW
C325
4.7u/10V_4
U32
IN
FAULT
EN
ILIM
OUT
GND
EPAD
AP2553FDC-7
{10} EN_SD_SOCKET_PWR
R462
499K_1%_4
R371
28.7K_1%_2
900MA ILIM TYP
PP3300_SD_DX_R
R390
0.02_1%_6
PP3300_SD
IPEAK 900mA
SD CARD
550MA
900MA LIMIT (SEE V4.1)
100 OHM DISCHARGE
R684
0_5%_4
PP5000_ALW
C448
0.1u/16V_4
PP1800_ALW
C443
0.1u/16V_4
R490
0_5%_4
{23,29,32} EN_EC_PWR
C449
100p/50V_4
PP1800_ALW
C444
0.1u/16V_4
R491
0_5%_4
PP3300_A
R466
499K_1%_4
C450
1000p/50V_4
U86
VDD
VIN1
EN1
SS1
VIN2
EN2
SS2
VOUT1
VOUT2
GND
EPAD
RT9740AGQW
C452
*10u/6.3V_6
DNS
C455
0.1u/16V_4
R495 0_5_1%_4
IPEAK:4mA
PP1800_EC_A
PP1800_A_R
R493
0.02_1%_6
PP1800_A
C453
*10u/6.3V_6
DNS
C456
0.1u/16V_4
IPEAK:2A
R681
0_5%_4
PP5000_ALW
C445
0.1u/16V_4
PP3300_ALW
C420
0.1u/16V_4
R467
0_5%_4
{31} PP5000_A_PG_OD
C446
1000p/50V_4
PP3300_ALW
C442
0.1u/16V_4
R468
0_5%_4
PP1800_S0
R463
499K_1%_4
C447
1000p/50V_4
U74
VDD
VIN1
EN1
SS1
VIN2
EN2
SS2
VOUT1
VOUT2
GND
EPAD
RT9740AGQW
C451
*10u/6.3V_6
DNS
C454
0.1u/16V_4
PP3300_A_R
R492
0.02_1%_6
PP3300_A
PP3300_S0_R
C641
*10u/6.3V_6
DNS
C643
0.1u/16V_4
R170
0.02_1%_6
PP3300_S0
PP3300_EMMC_S0
R370 0.02_1%_6
IPEAK:175MA
R683
0_5%_4
PP5000_ALW
C35
0.1u/16V_4
PP3300_ALW
C36
0.1u/16V_4
R26
0_5%_4
{10} EN_PP3300_WLAN
R440
499K_1%_4
C34
*0.1u/16V_4
DNS
C39
1000p/50V_4
PP1800_ALW
C37
0.1u/16V_4
R29
0_5%_4
{23} EN_PP1800_SENSOR
R459
499K_1%_4
C38
*0.1u/16V_4
DNS
C40
1000p/50V_4
U85
VBIAS
VIN1
ON1
CT1
VIN2
ON2
CT2
VOUT1
VOUT2
GND
EPAD
TPS22976DPUR
C41
*10u/6.3V_6
DNS
C43
0.1u/16V_4
PP3300_WLAN_DX_R
R389
0.02_1%_6
PP3300_WLAN
IPEAK:900MA
C42
*10u/6.3V_6
DNS
C44
0.1u/16V_4
R387
0.1_1%_4
PP1800_SENSOR
IPEAK:2MA

Quanta Computer Inc.

PROJECT :

Size	Document Number	Rev
	POWER - LOAD SWITCHES	2A

Date: Wednesday, November 14, 2018 Sheet 32 of 35

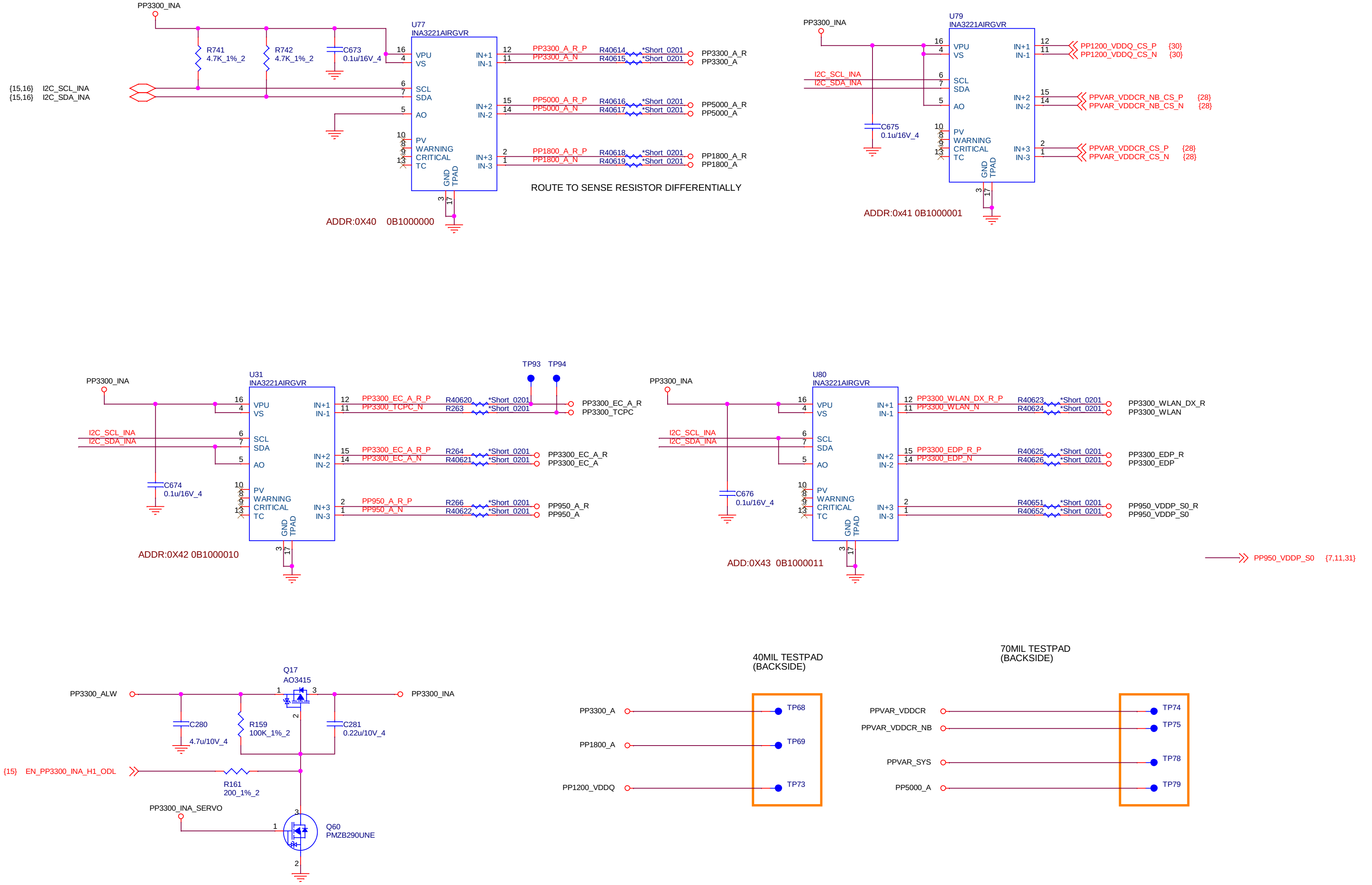
PP3300_INA
R741
4.7K_1%_2
R742
4.7K_1%_2
C673
0.1u/16V_4
U77
INA3221AIRGVR
VPU
VS
SCL
SDA
AO
PV
WARNING
CRITICAL
TC
GND
TPAD
IN+1
IN-1
IN+2
IN-2
IN+3
IN-3
{15,16} I2C_SCL_INA
{15,16} I2C_SDA_INA
PP3300_A_R_P
PP3300_A_N
R40614 *Short_0201
R40615 *Short_0201
PP3300_A_R
PP3300_A
PP5000_A_R_P
PP5000_A_N
R40616 *Short_0201
R40617 *Short_0201
PP5000_A_R
PP5000_A
PP1800_A_R_P
PP1800_A_N
R40618 *Short_0201
R40619 *Short_0201
PP1800_A_R
PP1800_A
ROUTE TO SENSE RESISTOR DIFFERENTIALLY
ADDR:0X40 0B1000000
U79
INA3221AIRGVR
I2C_SCL_INA
I2C_SDA_INA
C675
0.1u/16V_4
PP1200_VDDQ_CS_P {30}
PP1200_VDDQ_CS_N {30}
PPVAR_VDDCR_NB_CS_P {28}
PPVAR_VDDCR_NB_CS_N {28}
PPVAR_VDDCR_CS_P {28}
PPVAR_VDDCR_CS_N {28}
ADDR:0x41 0B1000001
TP93
TP94
U31
INA3221AIRGVR
C674
0.1u/16V_4
PP3300_EC_A_R_P
PP3300_TCPC_N
R40620 *Short_0201
R263 *Short_0201
PP3300_EC_A_R
PP3300_TCPC
PP3300_EC_A_R_P
PP3300_EC_A_N
R264 *Short_0201
R40621 *Short_0201
PP3300_EC_A_R
PP3300_EC_A
PP950_A_R_P
PP950_A_N
R266 *Short_0201
R40622 *Short_0201
PP950_A_R
PP950_A
ADDR:0X42 0B1000010
U80
INA3221AIRGVR
C676
0.1u/16V_4
PP3300_WLAN_DX_R_P
PP3300_WLAN_N
R40623 *Short_0201
R40624 *Short_0201
PP3300_WLAN_DX_R
PP3300_WLAN
PP3300_EDP_R_P
PP3300_EDP_N
R40625 *Short_0201
R40626 *Short_0201
PP3300_EDP_R
PP3300_EDP
R40651 *Short_0201
R40652 *Short_0201
PP950_VDDP_S0_R
PP950_VDDP_S0
ADD:0X43 0B1000011
PP950_VDDP_S0 {7,11,31}
Q17
AO3415
PP3300_ALW
PP3300_INA
C280
4.7u/10V_4
R159
100K_1%_2
C281
0.22u/10V_4
{15} EN_PP3300_INA_H1_ODL
R161
200_1%_2
PP3300_INA_SERVO
Q60
PMZB290UNE
40MIL TESTPAD
(BACKSIDE)
PP3300_A
PP1800_A
PP1200_VDDQ
TP68
TP69
TP73
70MIL TESTPAD
(BACKSIDE)
PPVAR_VDDCR
PPVAR_VDDCR_NB
PPVAR_SYS
PP5000_A
TP74
TP75
TP78
TP79

Quanta Computer Inc.

PROJECT :

Size	Document Number	Rev
	INAs	2A

Date: Wednesday, November 14, 2018 Sheet 33 of 35

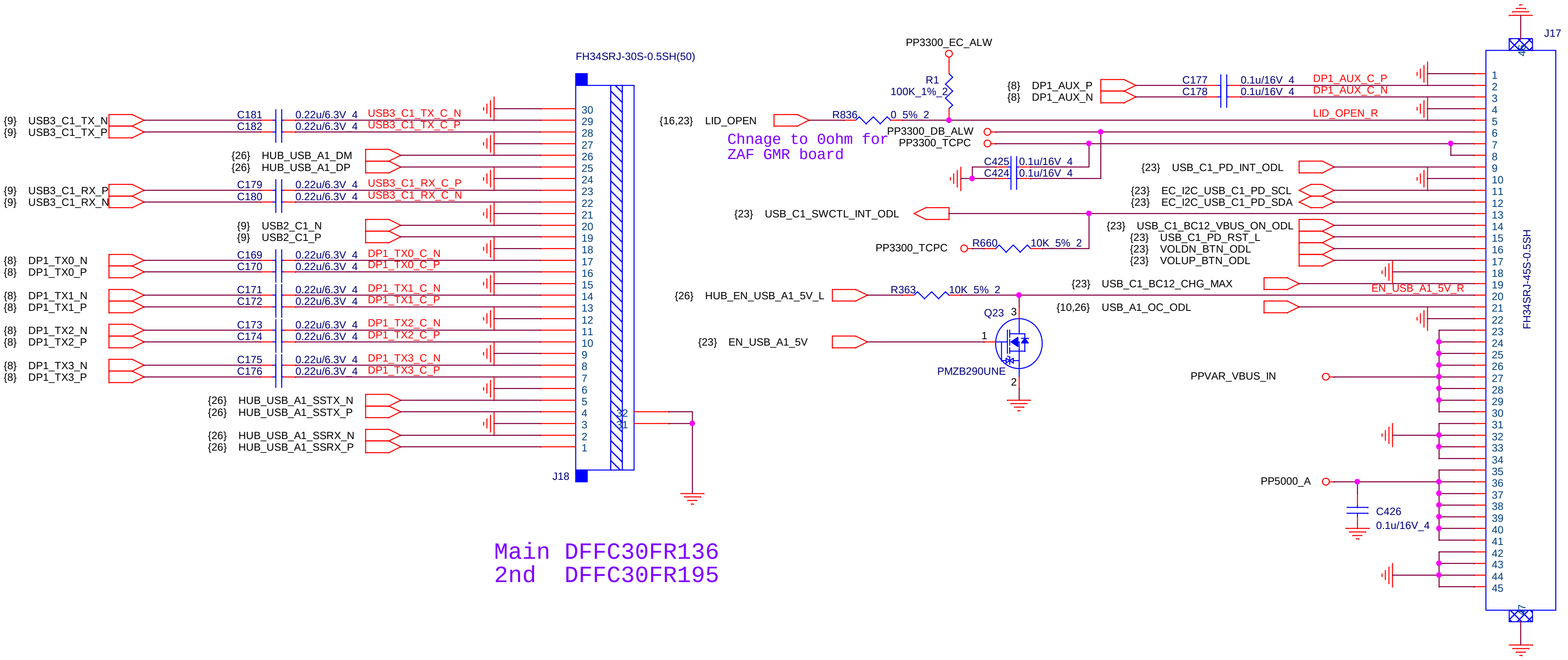
FH34SRJ-30S-0.5SH(50)
J18
{9} USB3_C1_TX_N
{9} USB3_C1_TX_P
C181 0.22u/6.3V_4 USB3_C1_TX_C_N
C182 0.22u/6.3V_4 USB3_C1_TX_C_P
{26} HUB_USB_A1_DM
{26} HUB_USB_A1_DP
{9} USB3_C1_RX_P
{9} USB3_C1_RX_N
C179 0.22u/6.3V_4 USB3_C1_RX_C_P
C180 0.22u/6.3V_4 USB3_C1_RX_C_N
{9} USB2_C1_N
{9} USB2_C1_P
{8} DP1_TX0_N
{8} DP1_TX0_P
C169 0.22u/6.3V_4 DP1_TX0_C_N
C170 0.22u/6.3V_4 DP1_TX0_C_P
{8} DP1_TX1_N
{8} DP1_TX1_P
C171 0.22u/6.3V_4 DP1_TX1_C_N
C172 0.22u/6.3V_4 DP1_TX1_C_P
{8} DP1_TX2_N
{8} DP1_TX2_P
C173 0.22u/6.3V_4 DP1_TX2_C_N
C174 0.22u/6.3V_4 DP1_TX2_C_P
{8} DP1_TX3_N
{8} DP1_TX3_P
C175 0.22u/6.3V_4 DP1_TX3_C_N
C176 0.22u/6.3V_4 DP1_TX3_C_P
{26} HUB_USB_A1_SSTX_N
{26} HUB_USB_A1_SSTX_P
{26} HUB_USB_A1_SSRX_N
{26} HUB_USB_A1_SSRX_P
30 29 28 27 26 25 24 23 22 21 20 19 18 17 16 15 14 13 12 11 10 9 8 7 6 5 4 3 2 1
32 31
Main DFFC30FR136
2nd DFFC30FR195
PP3300_EC_ALW
R1
100K_1%_2
{16,23} LID_OPEN
R836 0_5%_2
Chnage to 0ohm for
ZAF GMR board
PP3300_DB_ALW
PP3300_TCPC
C425 0.1u/16V_4
C424 0.1u/16V_4
{8} DP1_AUX_P
{8} DP1_AUX_N
C177 0.1u/16V_4 DP1_AUX_C_P
C178 0.1u/16V_4 DP1_AUX_C_N
LID_OPEN_R
{23} USB_C1_PD_INT_ODL
{23} EC_I2C_USB_C1_PD_SCL
{23} EC_I2C_USB_C1_PD_SDA
{23} USB_C1_SWCTL_INT_ODL
PP3300_TCPC
R660 10K_5%_2
{23} USB_C1_BC12_VBUS_ON_ODL
{23} USB_C1_PD_RST_L
{23} VOLDN_BTN_ODL
{23} VOLUP_BTN_ODL
{23} USB_C1_BC12_CHG_MAX
EN_USB_A1_5V_R
{26} HUB_EN_USB_A1_5V_L
R363 10K_5%_2
{10,26} USB_A1_OC_ODL
Q23 3
1
2
{23} EN_USB_A1_5V
PMZB290UNE
PPVAR_VBUS_IN
PP5000_A
C426
0.1u/16V_4
J17
FH34SRJ-45S-0.5SH
46
47
1 2 3 4 5 6 7 8 9 10 11 12 13 14 15 16 17 18 19 20 21 22 23 24 25 26 27 28 29 30 31 32 33 34 35 36 37 38 39 40 41 42 43 44 45

Quanta Computer Inc.

PROJECT : GRUNT

Size	Document Number	Rev
	SUB BOARD CONNECTORS	2A

Date: Wednesday, November 14, 2018 Sheet 34 of 35

Quanta Computer Inc.

PROJECT : GRUNT

Size
Document Number
DNS FEATURE LIST
Rev
2A

Date: Wednesday, November 14, 2018
Sheet 35 of 35