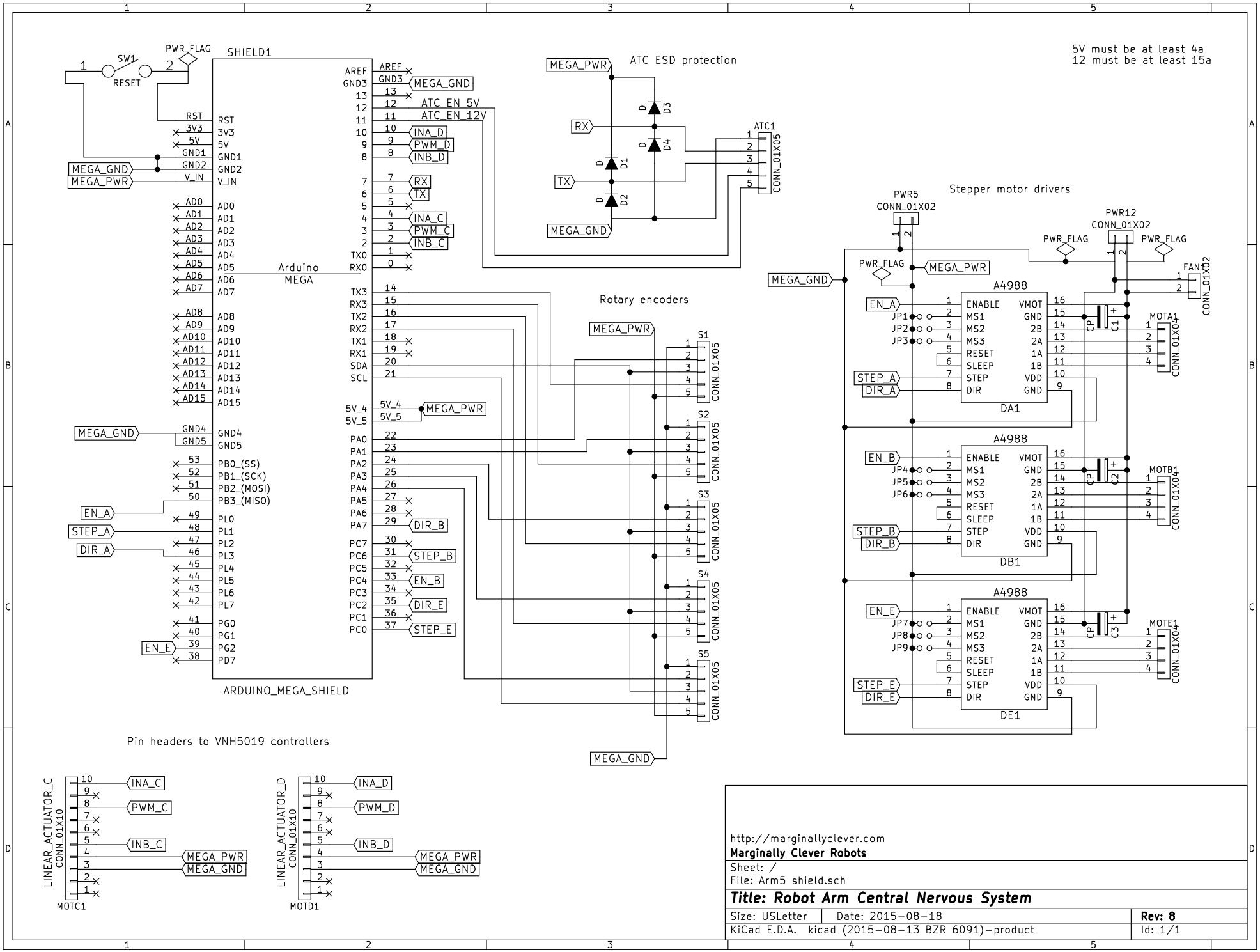

http://marginallyclever.com

Marginally Clever Robots

Sheet: /

File: Arm5 shield.sch

Title: Robot Arm Central Nervous System

Size: USLetter	Date: 2015-08-18	**Rev: 8**
KiCad E.D.A. kicad (2015-08-13 BZR 6091)-product		Id: 1/1