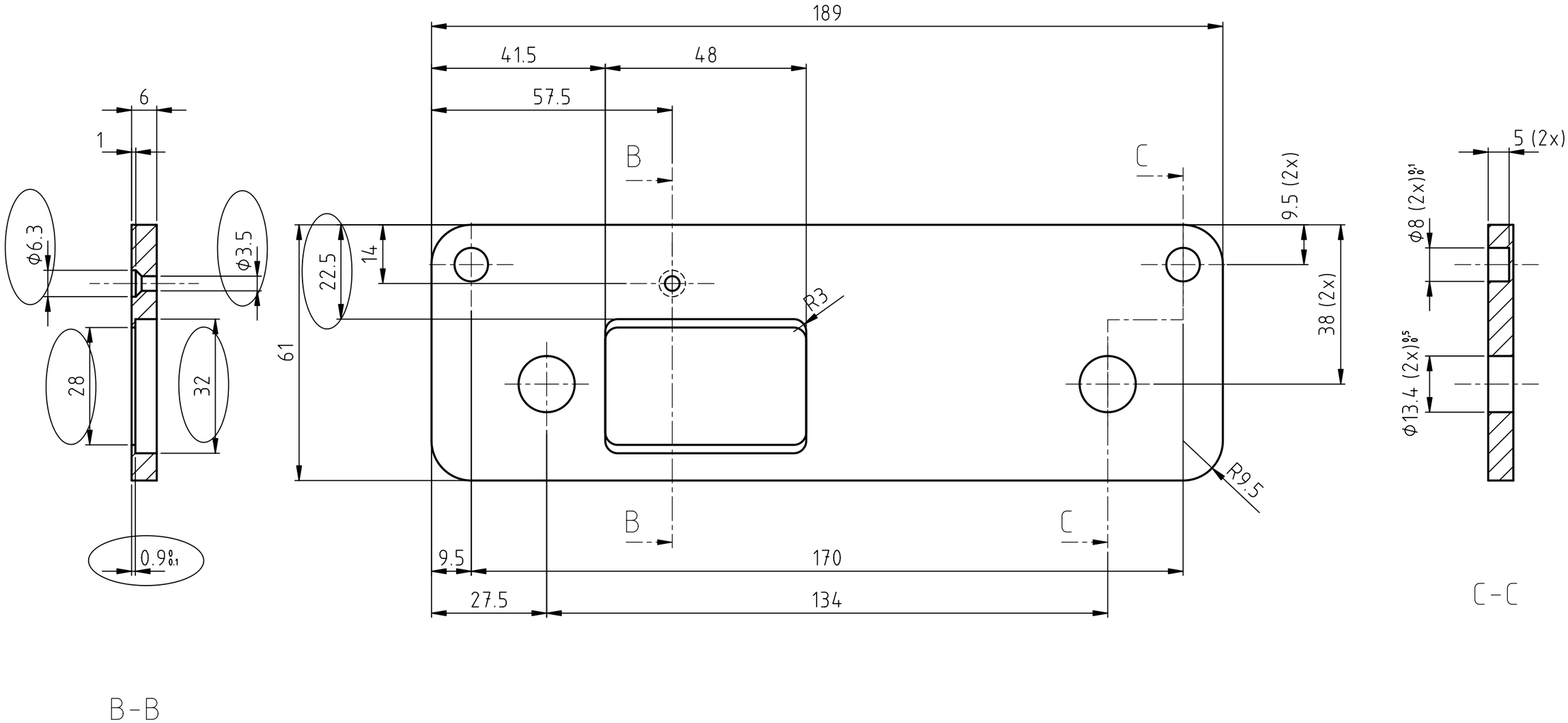

Break Sharp Edges 0.2 mm x 45°

BACK PLATE