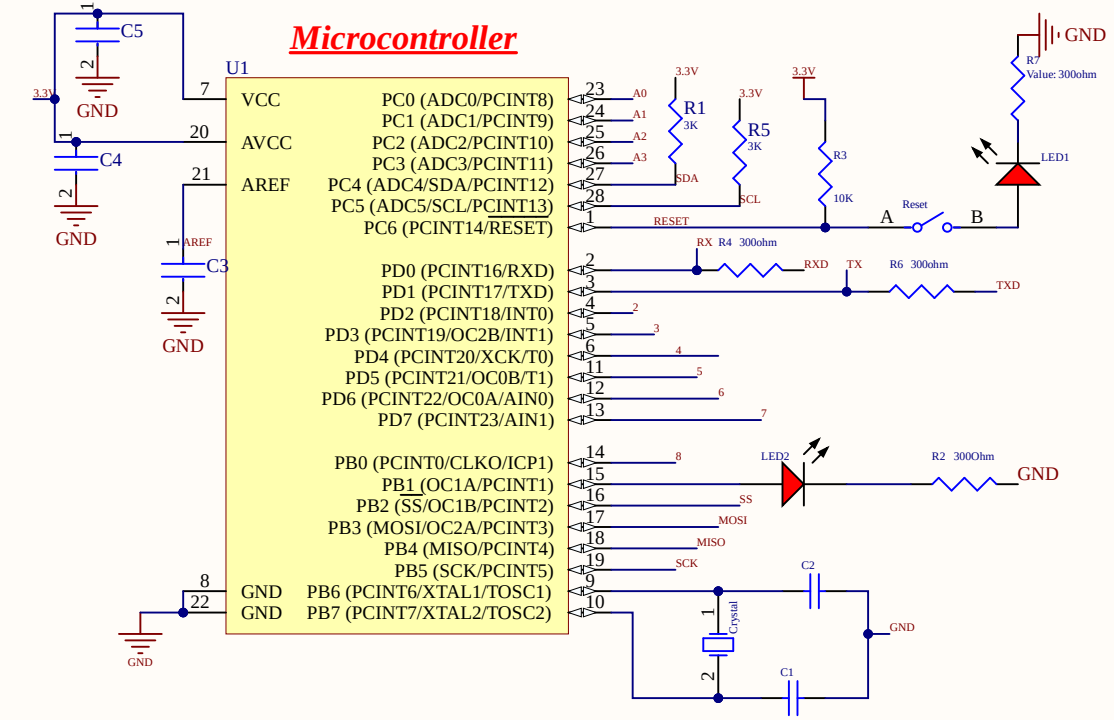

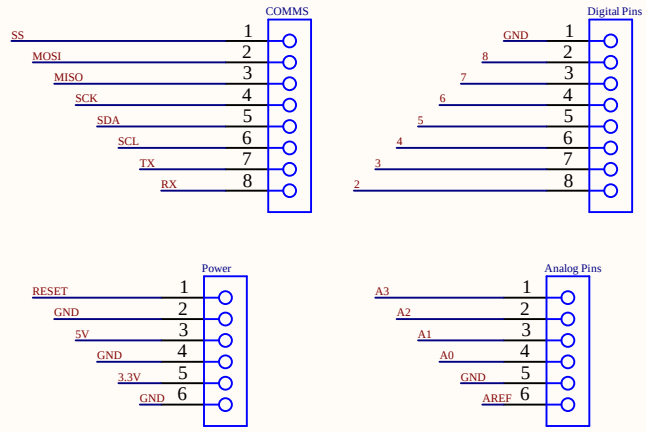

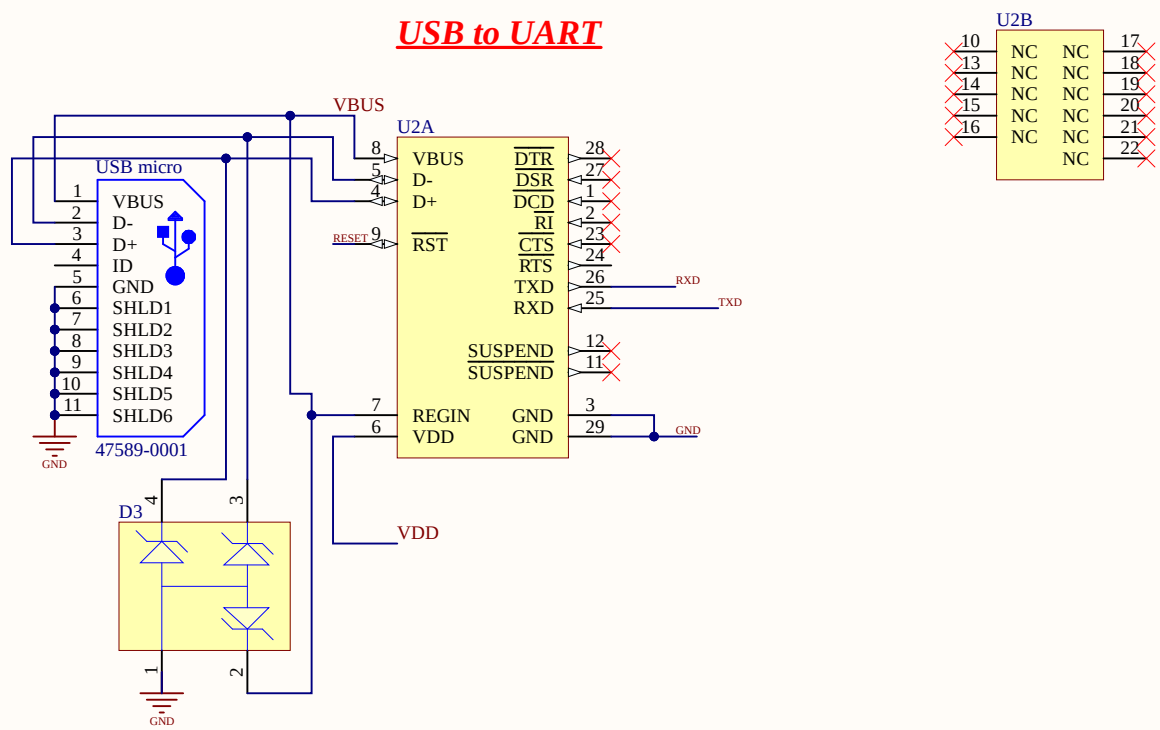

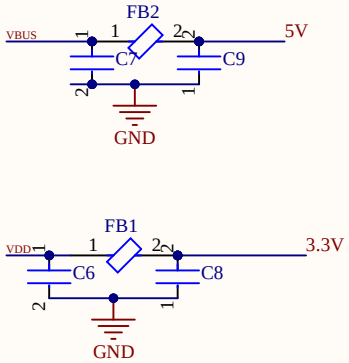

Title		
Size A	Number	Revision
Date: 3/31/2024		Sheet of
File: C:\Users\..\ATmega328P design.SchDoc		Drawn By:

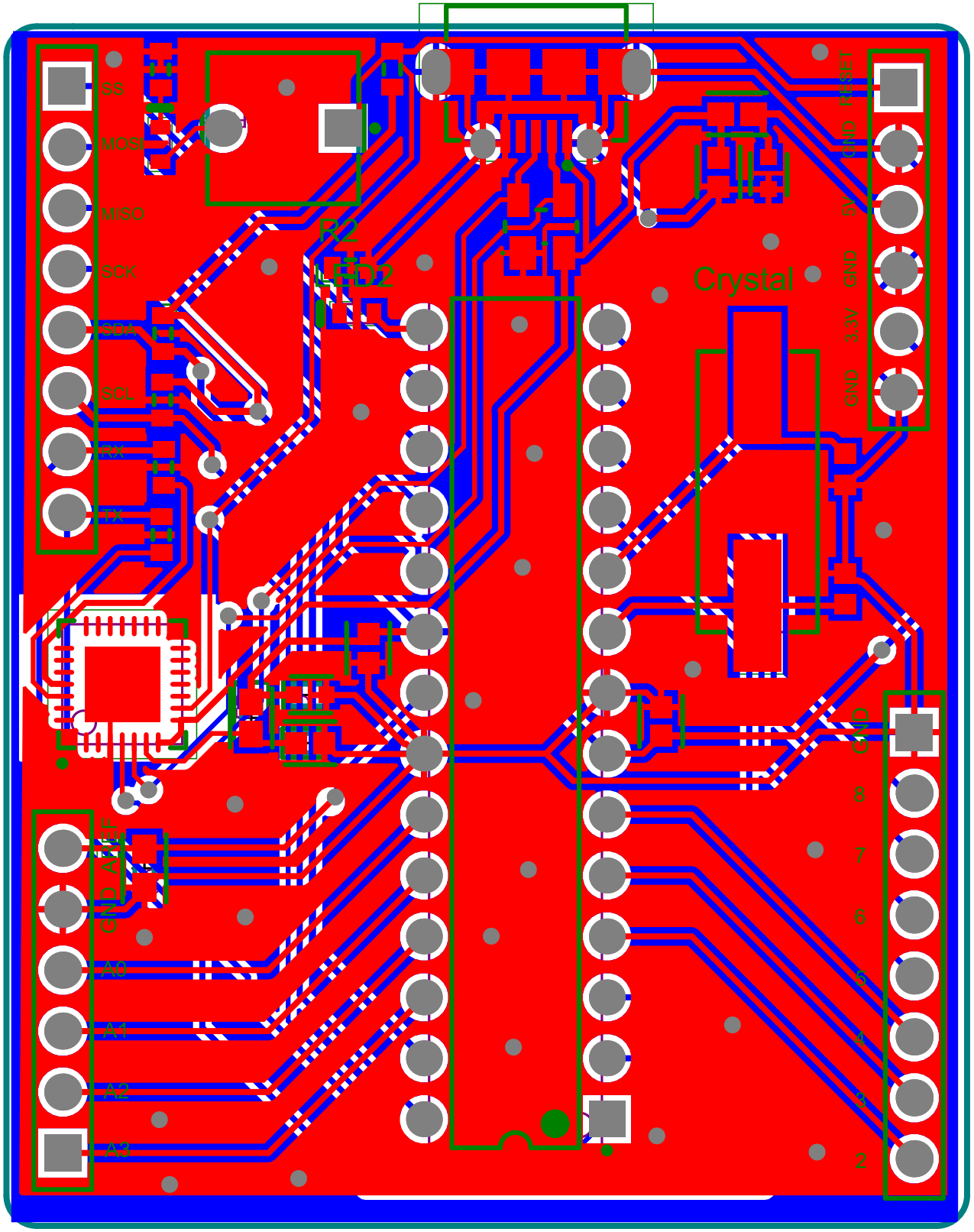
SS
MOSI
MISO
SCK
SDA
SCL
RX
TX
R2
LED2
Crystal
RESET
GND
5V
GND
3.3V
GND
GND
8
7
6
5
4
3
2
GND
AREF
A0
A1
A2
A3

Board Stack Report