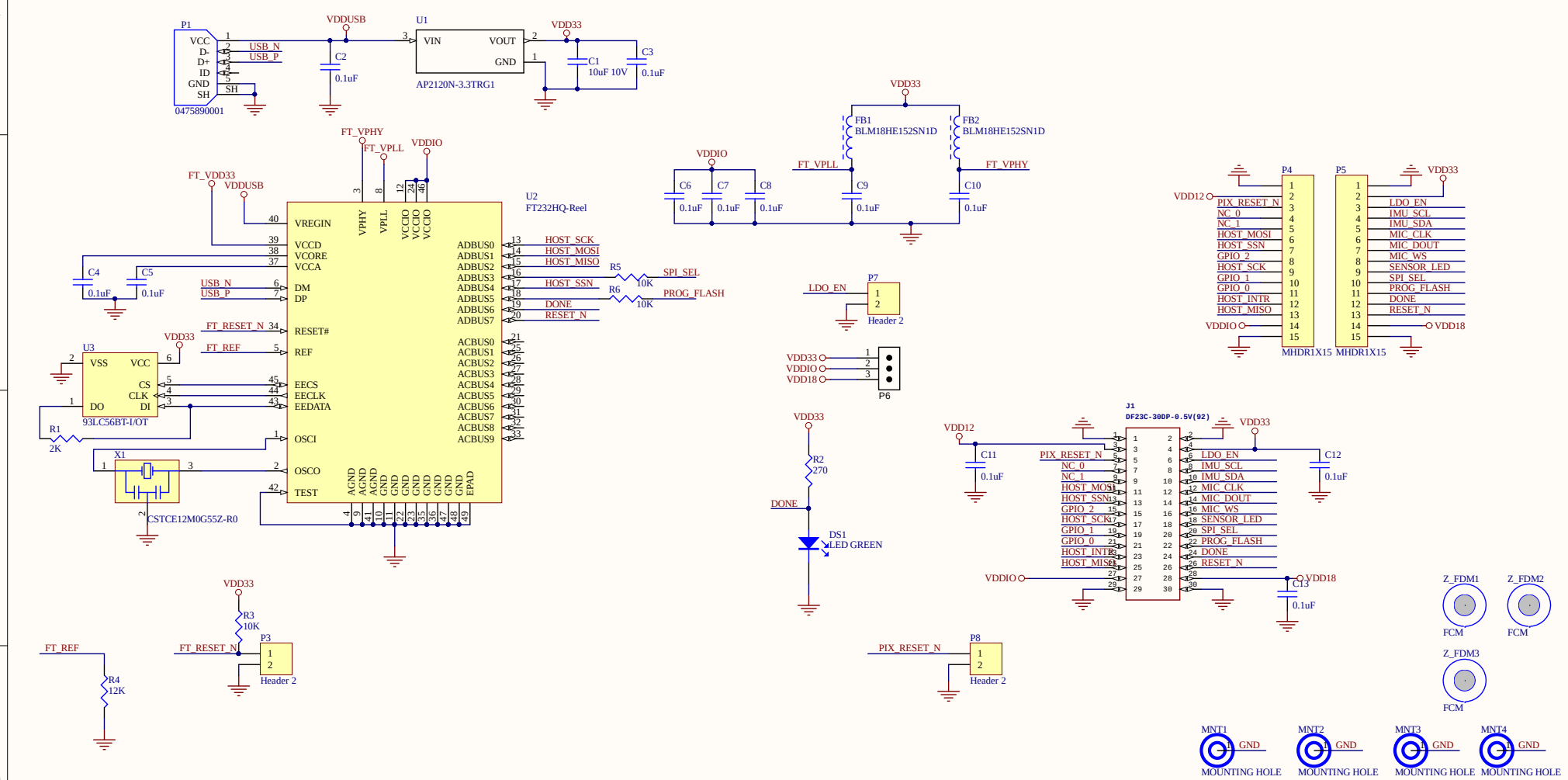
P1
VCC
D-
D+
ID
GND
SH
0475890001
USB_N
USB_P
VDDUSB
C2
0.1uF
U1
VIN
VOUT
GND
AP2120N-3.3TRG1
VDD33
C1
10uF 10V
C3
0.1uF
FT_VPHY
FT_VPLL
VDDIO
FT_VDD33
VDDUSB
U2
FT232HQ-Reel
VREGIN
VCCD
VCORE
VCCA
DM
DP
RESET#
REF
EECS
EECLK
EEDATA
OSCI
OSCO
TEST
ADBUS0
ADBUS1
ADBUS2
ADBUS3
ADBUS4
ADBUS5
ADBUS6
ADBUS7
ACBUS0
ACBUS1
ACBUS2
ACBUS3
ACBUS4
ACBUS5
ACBUS6
ACBUS7
ACBUS8
ACBUS9
HOST_SCK
HOST_MOSI
HOST_MISO
HOST_SSN
DONE
RESET_N
SPI_SEL
PROG_FLASH
R5
10K
R6
10K
C4
0.1uF
C5
0.1uF
FT_RESET_N
FT_REF
U3
VSS
VCC
CS
CLK
DI
DO
93LC56BT-I/OT
R1
2K
X1
CSTCE12M0G55Z-R0
R3
10K
P3
Header 2
R4
12K
C6
0.1uF
C7
0.1uF
C8
0.1uF
FB1
BLM18HE152SN1D
FB2
BLM18HE152SN1D
C9
0.1uF
C10
0.1uF
LDO_EN
P7
Header 2
P6
P4
P5
VDD12
VDD18
MHDR1X15
MHDR1X15
R2
270
DS1
LED GREEN
J1
DF23C-30DP-0.5V(92)
C11
0.1uF
C12
0.1uF
C13
0.1uF
P8
Header 2
PIX_RESET_N
Z_FDM1
Z_FDM2
Z_FDM3
FCM
MNT1
MNT2
MNT3
MNT4
GND
MOUNTING HOLE
Title
Size
B
Number
Revision
Date:
6/12/2019
Sheet
of
File:
E:\tinyVision_google_drive\..\breakout_board.SchDoc
Drawn By:

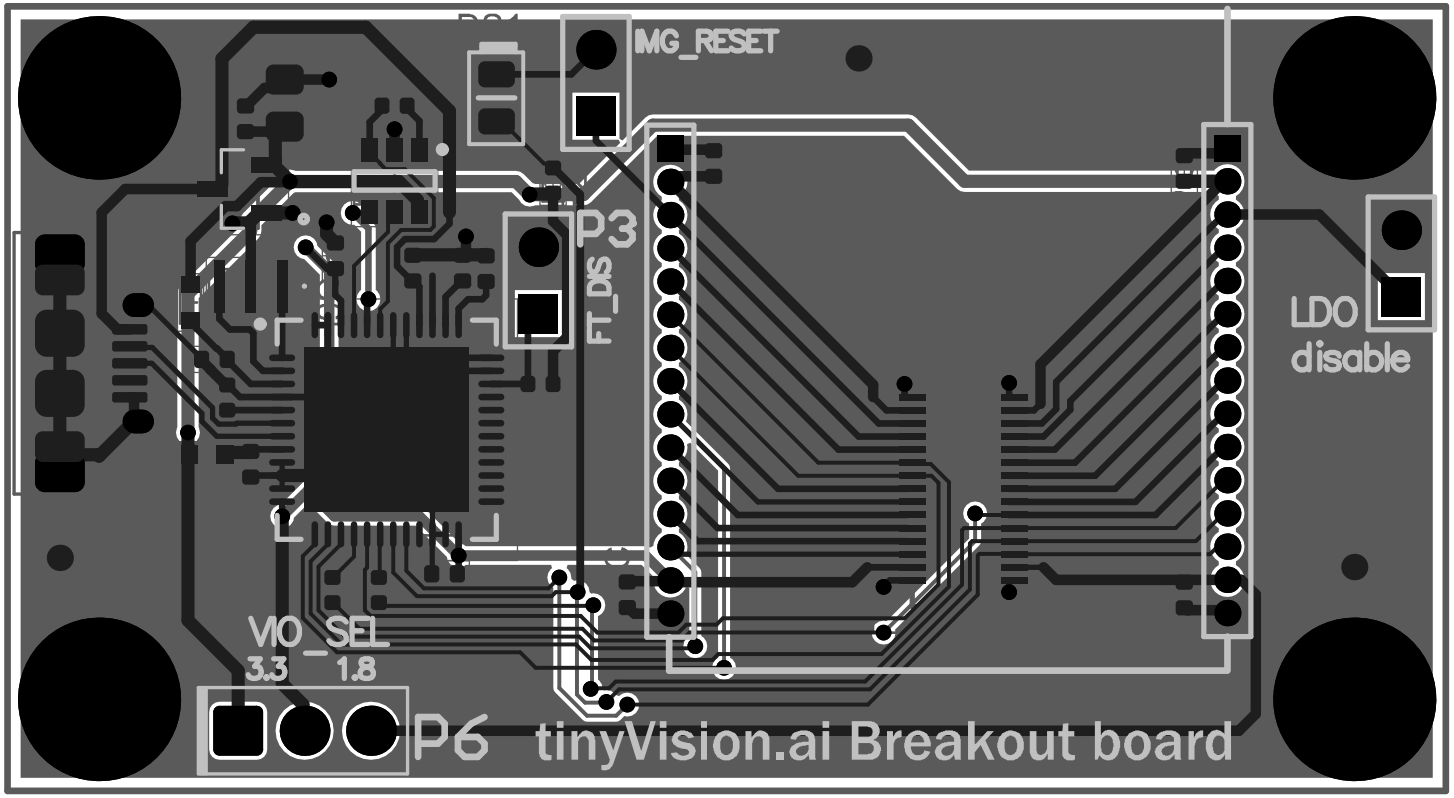
IMG_RESET
P3
FT_DIS
LDO
disable
VIO_SEL
3.3
1.8
P6
tinyVision.ai Breakout board