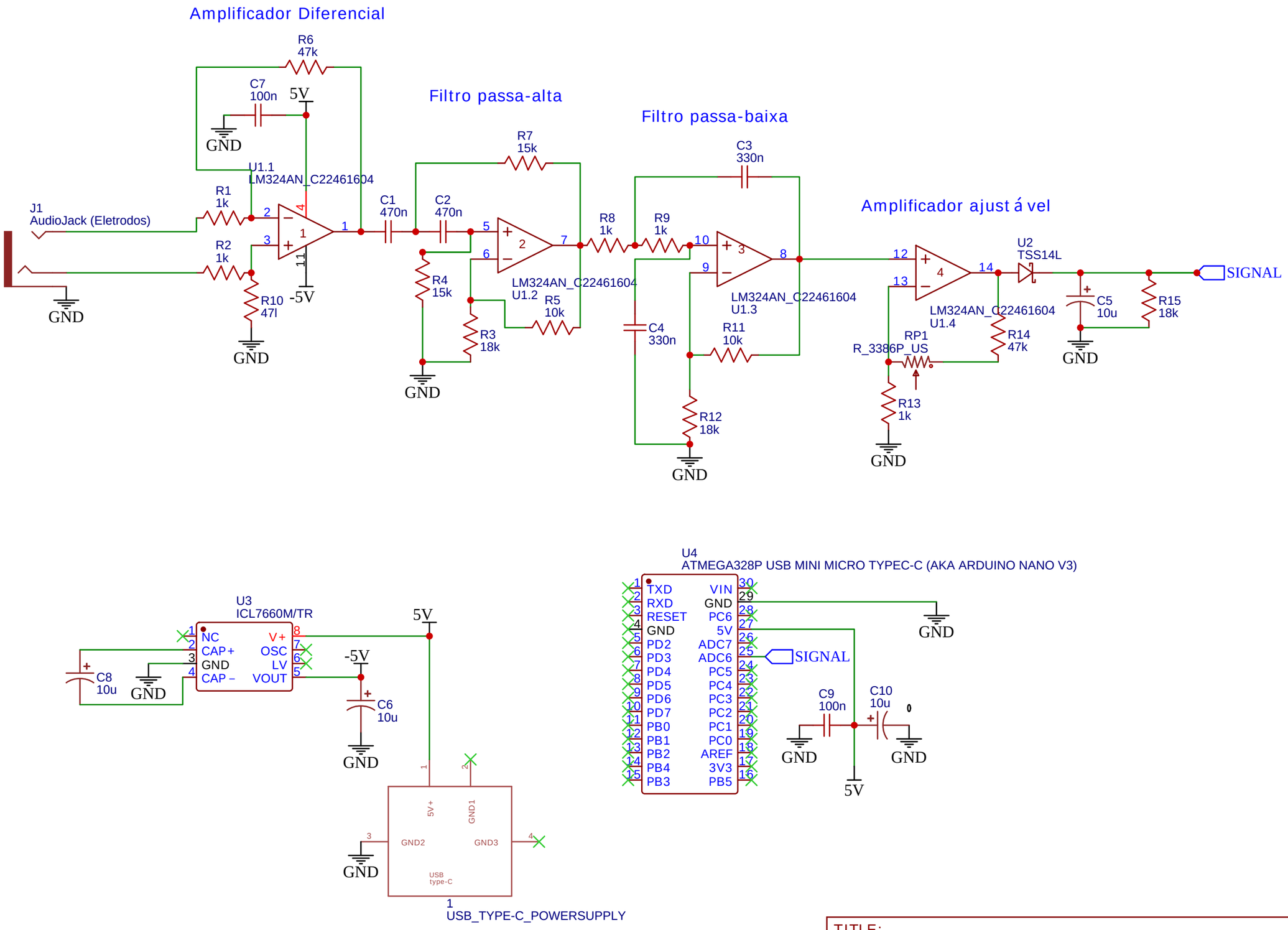

TITLE: EMG - Eletr ô nica 3: Amplificadores		REV: 1.0
EasyEDA	Company: UTFPR	Sheet: 1/1
	Date: 2025-05-27 Drawn By: Lucas Yukio Fukuda Matsumoto	