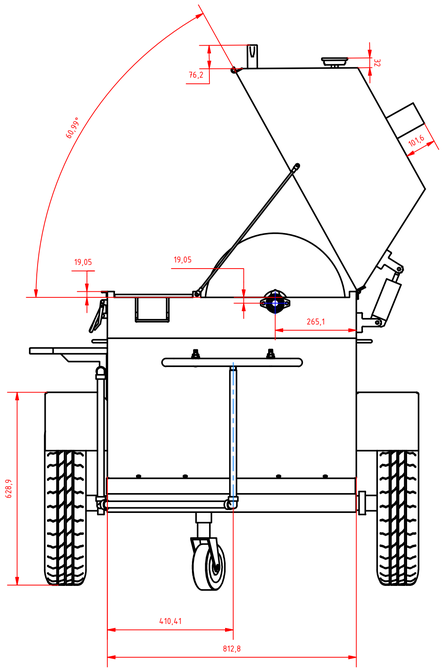

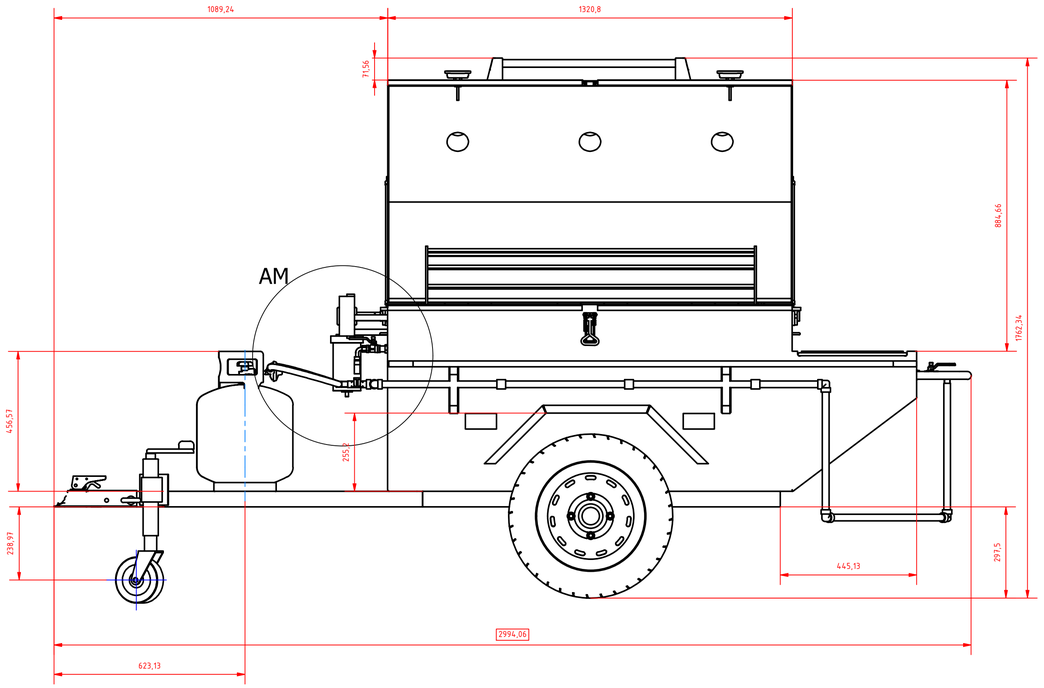

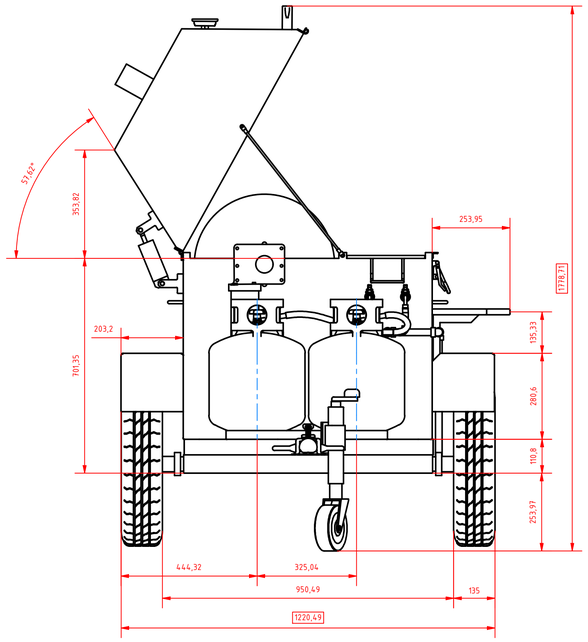

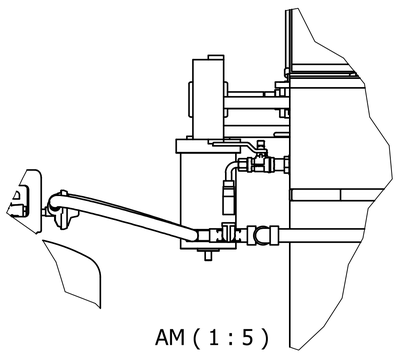

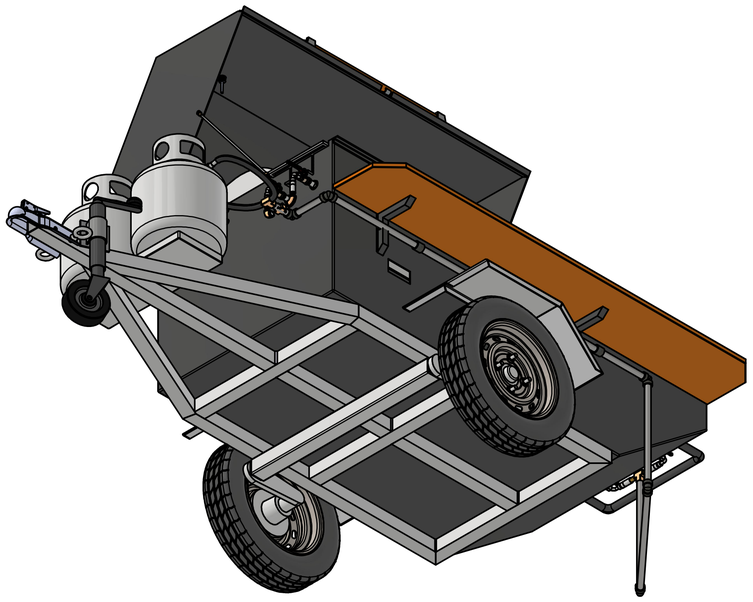

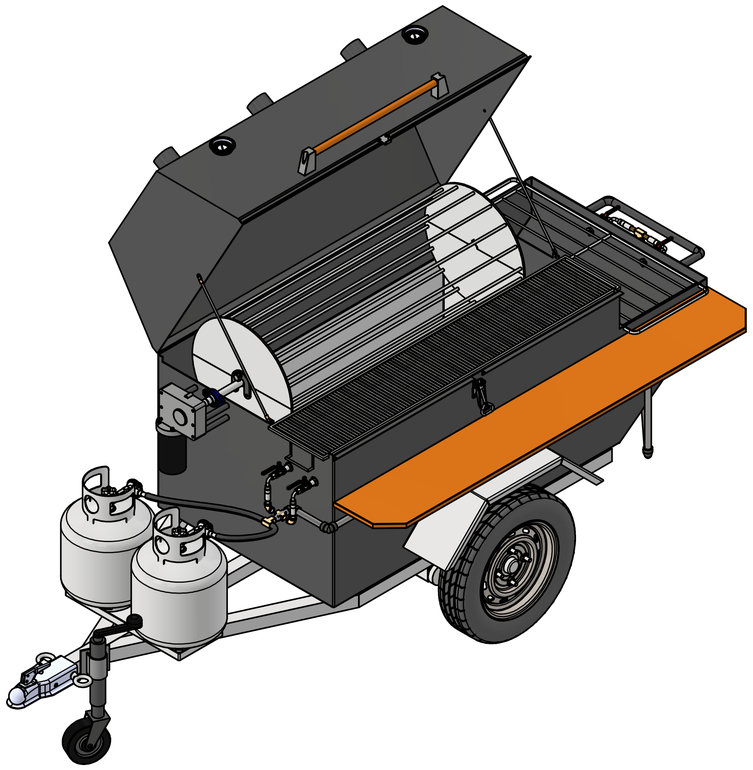

PARTS LIST			
ITEM	QTY	PART NUMBER	DESCRIPTION
8	1	BBQ-08	
12	2	BBQ-12	
20	3	BBQ-20	
16	1	BBQ-16	
19	2	BBQ-19	
15	1	BBQ-15	
17	2	BBQ-17	
9	2	BBQ-09	
11	1	BBQ-11	
4	1	BBQ-04	
14	1	BBQ-14	
13	2	BBQ-13	
3	1	BBQ-03	
1	1	BBQ-01	
2	1	BBQ-02	
5	1	BBQ-05	
6	1	BBQ-06	
7	1	BBQ-07	
10	1	BBQ-10	
21	1	BBQ-1 WELD	
22	1	Run 03	
23	1	Run 04	
24	2	Parker Union 62PL 62PL-5	Union

		DESENHO: DTL-BBQ			PEÇA N.:
		MODALIDADE: MECHANICAL ENGINEERING DESIGN - CAD			VOLUME APROX.:
FOLHA: A1	REVISÃO:	UNIDADE:	ESCALA: 1:10	DATA:	DESENHADO POR: PEDRO S. R. OLIVEIRA