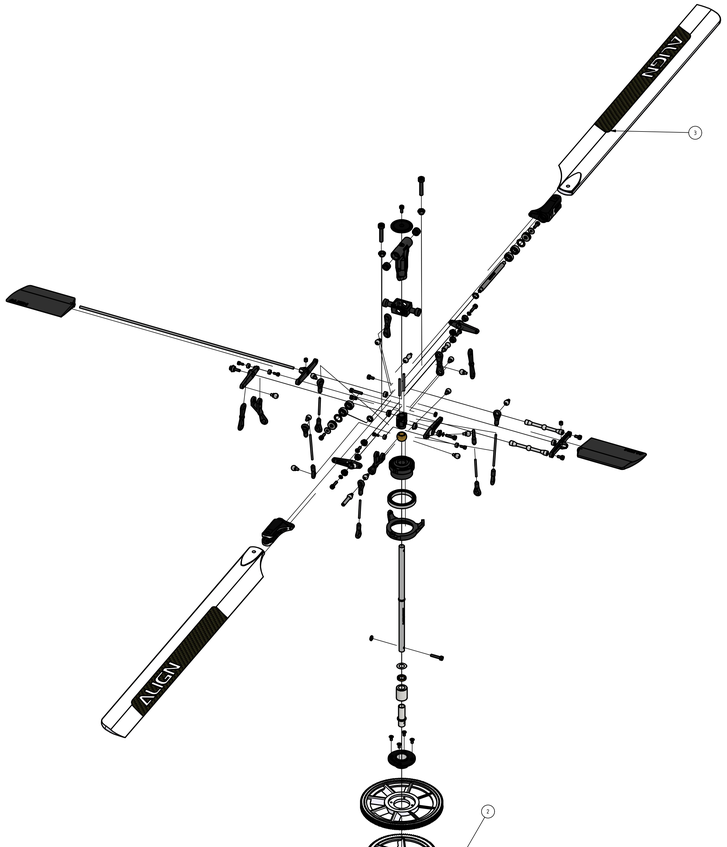

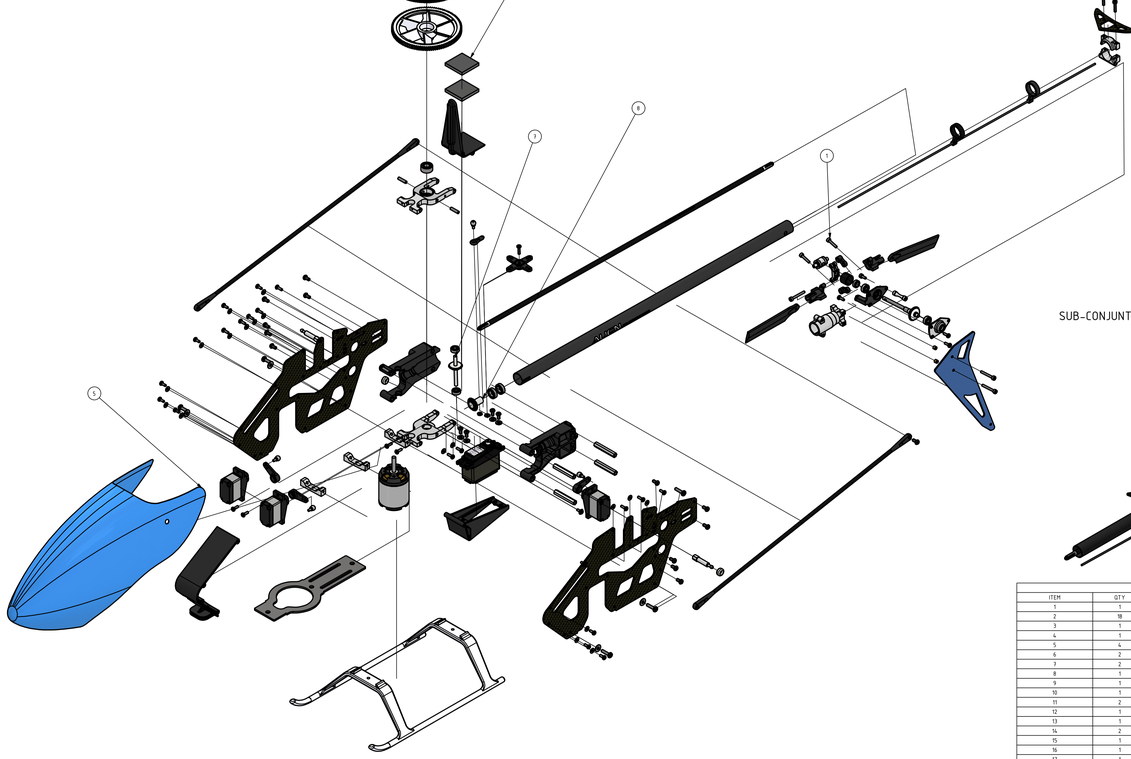

SUB-CONJUNTO-450HB01

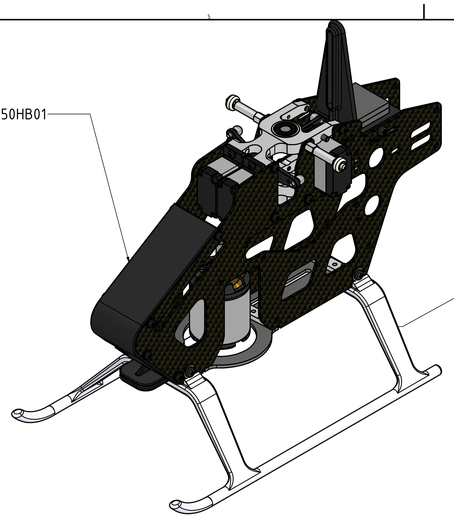

PARTS LIST			
ITEM	QTY	PART NUMBER	DESCRIPTION
1	2	458002 - Carbon fiber main frame	
2	1	458004 - Anti-rotation bracket	
3	1	458005 - Battery mount	
4	2	458006 - Metal bearing holder	
5	2	458008 - Canopy mounting bolt	
6	3	45F002 - Skid mount	
7	3	452005 - DS4 Servo horn	
8	3	50H012-1 - Linkage ball A	Linkage ball EM2x2.5)
9	2	HB8008-1 - Canopy nut	
10	20	DIN 125 - A 2.2	Washer
11	5	DIN 125 - A 2.8	Washer
12	2	DIN 913 - M2.5 x 10	Hexagon Socket Set Screw
13	2	Gyro Pad	
14	12	ISO 7045 - M2 x 5 - 4.8 - Z - product grade A	Pan head screw with type Z cross recess
15	13	ISO 7045 - M2 x 6 - 4.8 - Z - product grade A	Pan head screw with type Z cross recess
16	7	ISO 7045 - M2.5 x 10 - 4.8 - Z - product grade A	Pan head screw with type Z cross recess
17	3	DS149M	
18	1	KA35E017 - Motor	
19	1	H685ZZ - Bearing	
20	1	450-HB-02	
21	1	45F001 - Landing skid	

SUB-CONJUNTO-450 HT 01

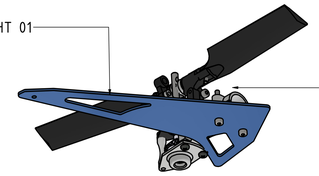

PARTS LIST			
ITEM	QTY	PART NUMBER	DESCRIPTION
1	1	45T010	Collar
2	1	45T011	Aluminium bolt
3	2	45T013	Metal tail rotor holder
4	2	45T014 - Tail blade	
5	2	HT70038	Controll link
6	2	HT7003C	Collar B
7	1	Tail rotor shaft assembly	Long umbrella gear
8	1	DIN 912 - M2 x 5	Cylinder Head Cap Screw
9	2	DIN 912 - M2 x 10	Cylinder Head Cap Screw
10	3	DIN 912 - M2 x 16	Cylinder Head Cap Screw
11	4	ISO 7045 - M2 x 6 - 4.8 - Z - product grade A	Pan head screw with type Z cross recess
12	1	HMR74ZZ	Bearing
13	2	HMR83ZZ	Bearing
14	1	450-HT-09	
15	1	450-HT-21	
16	1	450-HT-01	
17	1	450-HT-02	
18	1	45T008	Metal plate (R)
19	1	450-HT-15	

SUB-CONJUNTO-450HH01

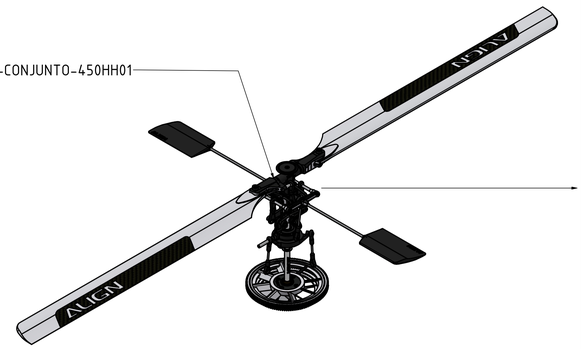

PARTS LIST			
ITEM	QTY	PART NUMBER	DESCRIPTION
1	1	45H017 - Main shaft spacer	
2	1	45H013 - Main shaft	
3	1	HB6002 - One-way bearing shaft	
4	1	Spur Gear2	
5	2	DIN 934 - M2	Hex Nut
6	2	DIN 912 - M2 x 10	Cylinder Head Cap Screw
7	1	HB6008 - Main gear case	
8	1	HF0612-1 - One-way bearing	
9	1	HB6006 - Main drive gear	
10	1	HB6003-2 - Shaft ring	
11	4	ISO 7046-1 - M2 x 4 - 4.8 - Z	Countersunk Flat Head Screw
12	1	Swash ball	
13	1	Swash bearing	
14	1	Swash bottom	
15	1	Swash top	
16	1	HH4007S-2 - Long linkage ball (M2x2.5)	Linkage ball EM2x2.5)
17	12	HH4006S-1 - Linkage ball A (M2x2.5)	Linkage ball EM2x2.5)
18	10	452004 - Ball link	
19	3	H2037-2 - Linkage rod D	
20	1	45H007 - Metal main rotor housing	
21	2	HH2021 - Damper rubber 80	
22	1	45H012 - Feathering shaft	
23	2	45H015 - Spacer	
24	4	HMR84ZZ - Bearing	
25	2	45H001 - Metal main rotor holder	
26	2	W10055-1 - Washer	Washer
27	2	HH2016 - Thrust bearing	
28	2	W10020 - Washer	Washer
29	4	DIN 912 - M2 x 6	Cylinder Head Cap Screw
30	2	452003 - Linkage ball A (M2.5x4)	Linkage ball EM2x2.5)
31	1	45H016 - Metal head stopper	
32	1	TS2005	Socket screw
33	1	45H014 - Metal flybar seesaw holder	
34	6	HFMR52ZZ - Bearing	Bearing
35	2	HMR52ZZ	Bearing
36	2	45H003 - Metal flybar control arm	
37	2	45H028 - Flybar control rod	
38	4	DIN 912 - M2 x 6	Cylinder Head Cap Screw
39	2	45H002 - Metal SF Mixing arm	
40	2	452001 - Ball link A	
41	2	H2003-2 - Linkage rod C	
42	2	HH2003-1 - Pin	
43	1	HH5002L-3 - Metal washout base	
44	4	HFMR52ZZ-1 - Bearing	Bearing
45	2	45H004 - Metal washout control arm	
46	2	45H005 - Radius arm	
47	2	452002 - Ball link B	
48	4	W10020-1	Washer
49	4	TS2008	Socket screw
50	4	H6812Z - Bearing	
51	4	DIN 912 - M1.6 x 4	Cylinder Head Cap Screw
52	1	HH4024 - Flybar rod	
53	2	HH4022 - Flybar paddle	
54	2	T13003	M3 Set screw
55	2	KU10024 - 325D Carbon fiber blade	
56	2	DIN 912 - M3 x 16	Cylinder Head Cap Screw
57	2	DIN 985 - M3	Hex Nut

SUB-CONJUNTO- 450HT03

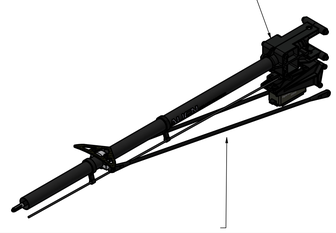

PARTS LIST			
ITEM	QTY	PART NUMBER	DESCRIPTION
1	1	45T025 - Tail servo mount	
2	18	DIN 912 - M2.5 x 5	Cylinder Head Cap Screw
3	1	45T002 - Tail boom mount (Right)	
4	1	45T001 - Tail boom mount (Left)	
5	4	45T003 - Hexo mounting bolt	
6	2	5090ZZ - Bearing	
7	2	HMR83ZZ	Bearing
8	1	Torque tube	
9	1	HT2004	Tail boom
10	1	45T016	Metal stabilizer mount (Lower)
11	2	45T20 - Tail boom brace end	
12	1	45T015	Metal stabilizer mount (Upper)
13	1	45T019	Carbon fiber horizontal stabilizer
14	2	TS2012 - Socket screw	Cylinder Head Cap Screw
15	1	DS520	
16	1	452006 - DS5A Servo horn	
17	1	T12008-4	Collar screw
18	1	W10020-6 - Washer	Washer
19	4	W10026 - Washer	Washer
20	1	50H012-1 - Linkage ball A	Linkage ball EM2x2.5)
21	1	DIN 934 - M2	Hex Nut
22	1	45T026 - Rudder control rod	
23	1	452004 - Ball link	
24	1	HT9004	Tail controll guide
25	1	HT9004 - Tail controll guide 2	Tail controll guide

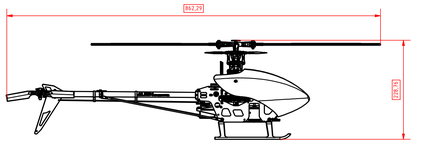

ESC: 1:5

PARTS LIST			
ITEM	QTY	PART NUMBER	DESCRIPTION
1	1	SUB CONJ: 450 HT 01	
2	1	SUBCONJUNTO 450HB01	
3	1	450HH01	
4	1	450HT03	
5	1	450ProCanopyWoTopCut Small	
6	2	Spur Gear1	
7	1	Bevel Gear1	
8	1	Bevel Gear2	

	DESENHO:				PEÇA N.:
	MODALIDADE: MECHANICAL ENGINEERING DESIGN - CAD			VOLUME APROX.:	
FOLHA:	REVISAO:	UNIDADE:	ESCALA:	DATA:	DESENHADO POR: PEDRO S. R. OLIVEIRA