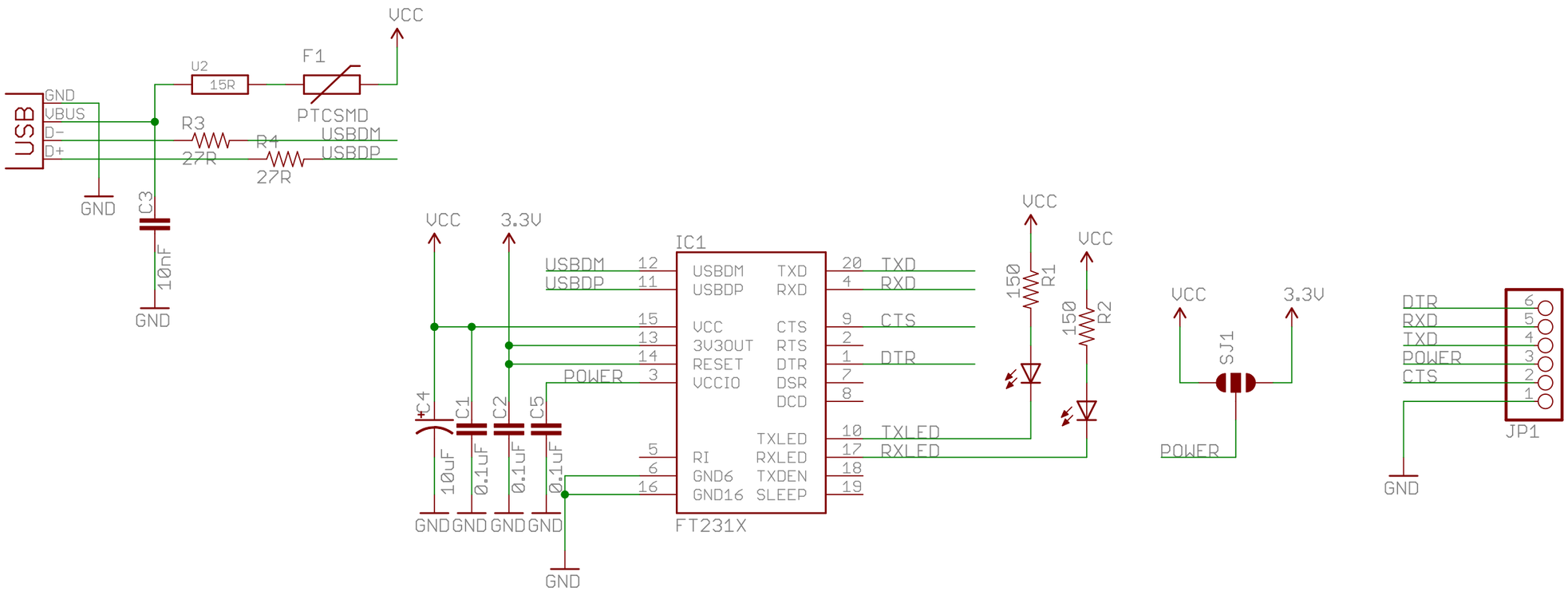

Copyright (c) 2013 Ibrahim Abd Elkader <i.abdalkader@gmail.com>
This work is licensed under the Creative Commons Attribution-ShareAlike 3.0 License.
To view a copy of this license, visit http://creativecommons.org/licenses/by-sa/3.0/

OSHW

TITLE: FT231X

Document Number:

REV: 1

Date: 11/17/13 7:31 PM

Sheet: 1/1