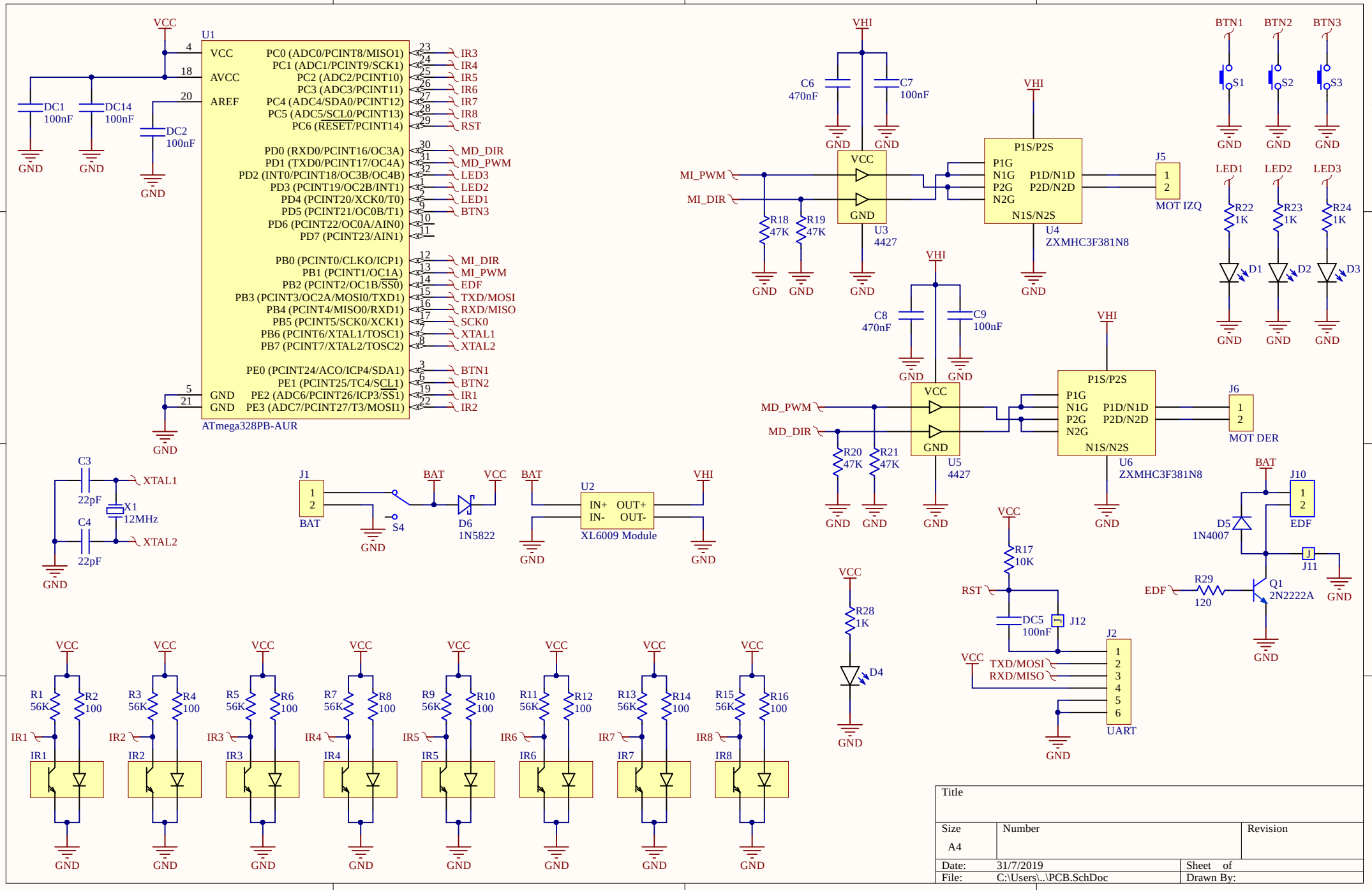

Title		
Size A4	Number	Revision
Date: 31/7/2019		Sheet of
File: C:\Users\..\PCB.SchDoc		Drawn By: