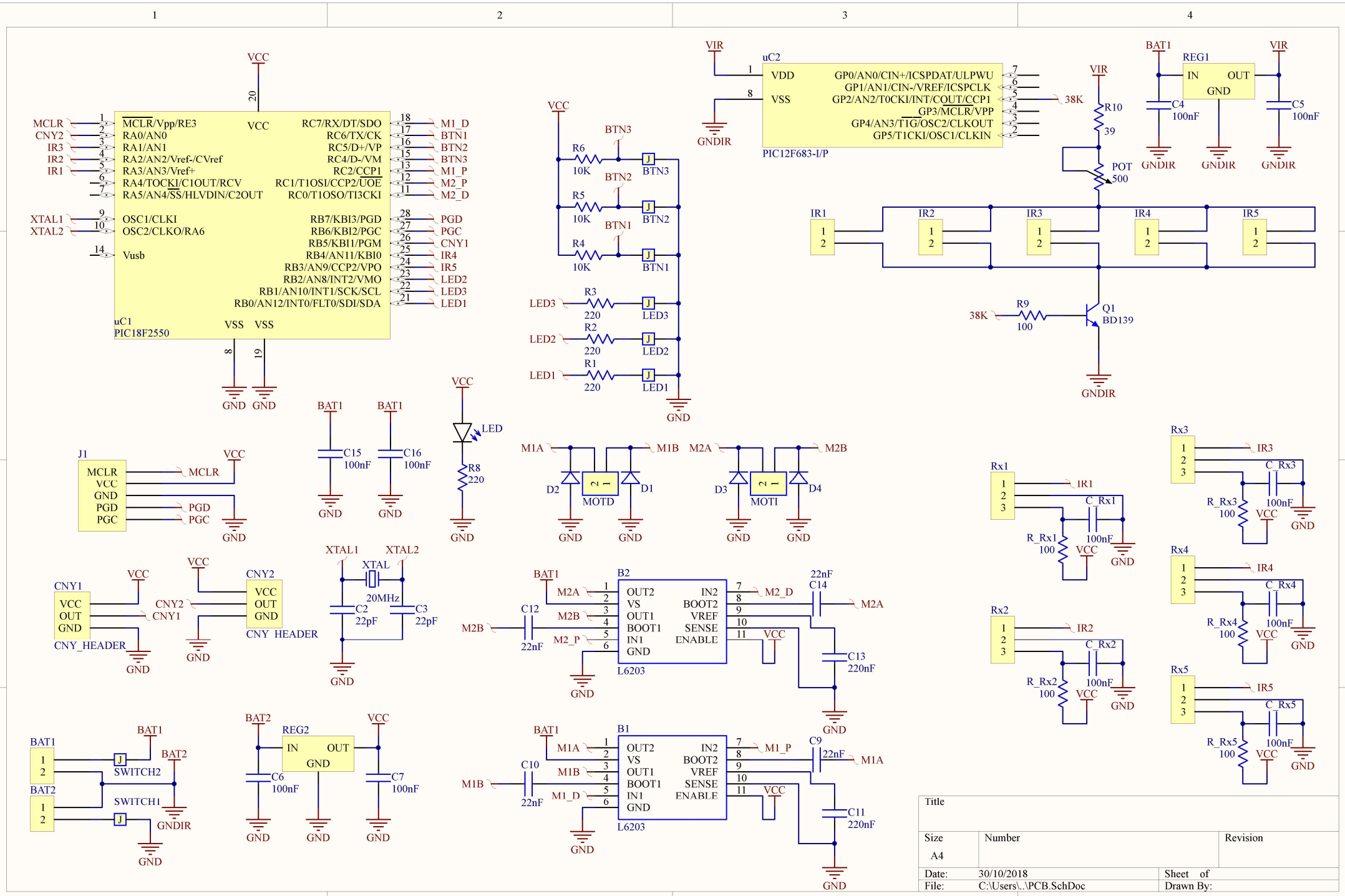
uC1
PIC18F2550
MCLR/Vpp/RE3
RA0/AN0
RA1/AN1
RA2/AN2/Vref-/CVref
RA3/AN3/Vref+
RA4/TOCKI/C1OUT/RCV
RA5/AN4/SS/HLVDIN/C2OUT
OSC1/CLKI
OSC2/CLKO/RA6
Vusb
RC7/RX/DT/SDO
RC6/TX/CK
RC5/D+/VP
RC4/D-/VM
RC2/CCP1
RC1/T1OSI/CCP2/UOE
RC0/T1OSO/TI3CKI
RB7/KBI3/PGD
RB6/KBI2/PGC
RB5/KBI1/PGM
RB4/AN11/KBI0
RB3/AN9/CCP2/VPO
RB2/AN8/INT2/VMO
RB1/AN10/INT1/SCK/SCL
RB0/AN12/INT0/FLT0/SDI/SDA
VCC
VSS
MCLR
CNY2
IR3
IR2
IR1
XTAL1
XTAL2
M1_D
BTN1
BTN2
BTN3
M1_P
M2_P
M2_D
PGD
PGC
CNY1
IR4
IR5
LED2
LED3
LED1
GND
uC2
PIC12F683-I/P
VDD
VSS
GP0/AN0/CIN+/ICSPDAT/ULPWU
GP1/AN1/CIN-/VREF/ICSPCLK
GP2/AN2/T0CKI/INT/COUT/CCP1
GP3/MCLR/VPP
GP4/AN3/T1G/OSC2/CLKOUT
GP5/T1CKI/OSC1/CLKIN
VIR
GNDIR
38K
R10
39
POT
500
R9
100
Q1
BD139
REG1
IN
OUT
C4
100nF
C5
100nF
R6
10K
R5
10K
R4
10K
R3
220
R2
220
R1
220
J1
MCLR
PGD
PGC
C15
100nF
C16
100nF
LED
R8
220
M1A
M1B
M2A
M2B
D1
D2
D3
D4
MOTD
MOTI
CNY1
CNY2
CNY_HEADER
XTAL
20MHz
C2
22pF
C3
22pF
B2
L6203
OUT2
VS
OUT1
BOOT1
IN1
GND
IN2
BOOT2
VREF
SENSE
ENABLE
C12
22nF
C14
22nF
C13
220nF
B1
C10
22nF
C9
22nF
C11
220nF
BAT1
BAT2
SWITCH1
SWITCH2
REG2
C6
100nF
C7
100nF
Rx1
Rx2
Rx3
Rx4
Rx5
C_Rx1
C_Rx2
C_Rx3
C_Rx4
C_Rx5
R_Rx1
R_Rx2
R_Rx3
R_Rx4
R_Rx5
100
100nF
Title
Size
A4
Number
Revision
Date:
30/10/2018
Sheet of
File:
C:\Users\..\PCB.SchDoc
Drawn By: