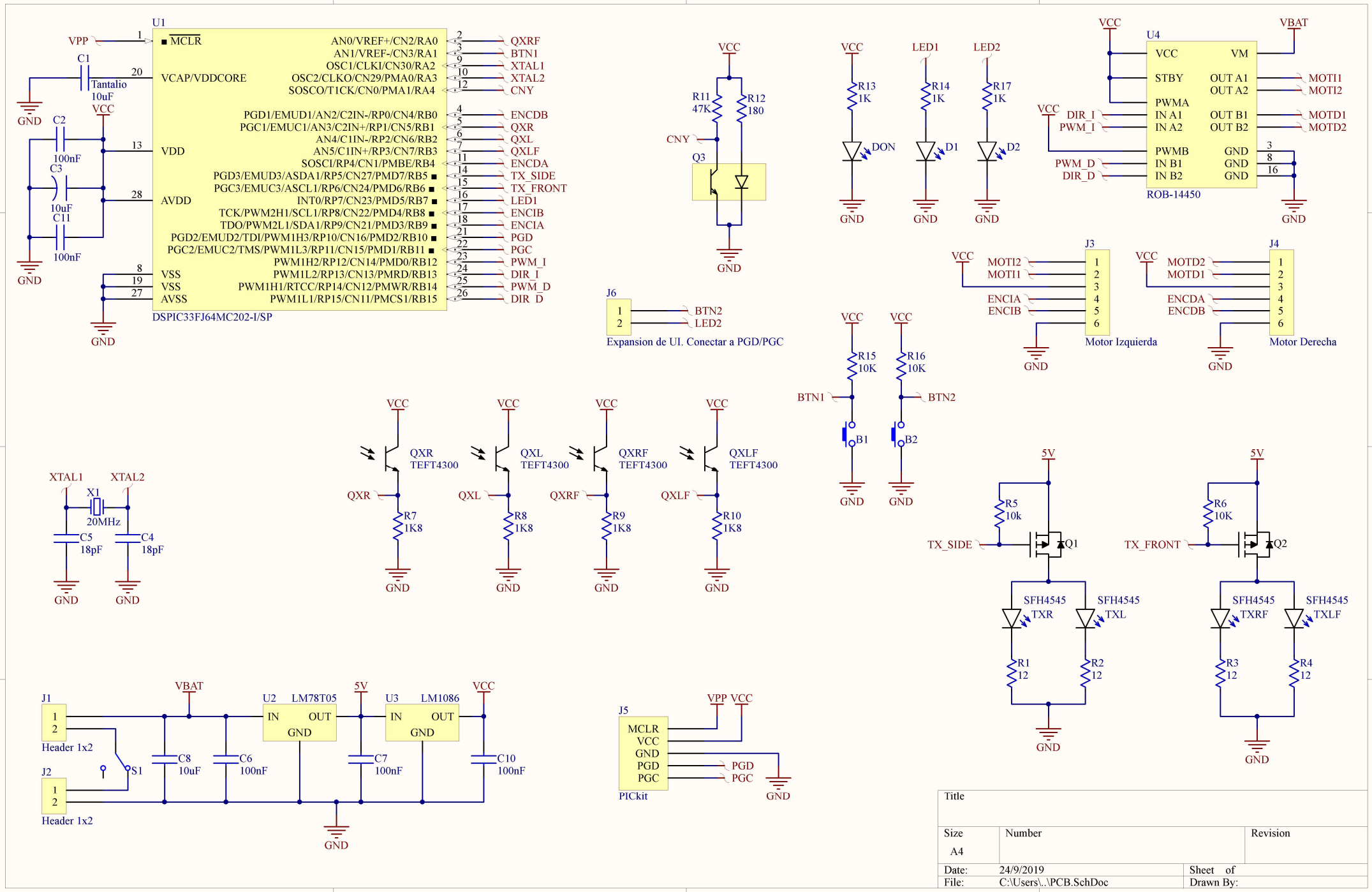
U1
DSPIC33FJ64MC202-I/SP
VPP
MCLR
VCAP/VDDCORE
VDD
AVDD
VSS
VSS
AVSS
AN0/VREF+/CN2/RA0
AN1/VREF-/CN3/RA1
OSC1/CLKI/CN30/RA2
OSC2/CLKO/CN29/PMA0/RA3
SOSCO/T1CK/CN0/PMA1/RA4
PGD1/EMUD1/AN2/C2IN-/RP0/CN4/RB0
PGC1/EMUC1/AN3/C2IN+/RP1/CN5/RB1
AN4/C1IN-/RP2/CN6/RB2
AN5/C1IN+/RP3/CN7/RB3
SOSCI/RP4/CN1/PMBE/RB4
PGD3/EMUD3/ASDA1/RP5/CN27/PMD7/RB5
PGC3/EMUC3/ASCL1/RP6/CN24/PMD6/RB6
INT0/RP7/CN23/PMD5/RB7
TCK/PWM2H1/SCL1/RP8/CN22/PMD4/RB8
TDO/PWM2L1/SDA1/RP9/CN21/PMD3/RB9
PGD2/EMUD2/TDI/PWM1H3/RP10/CN16/PMD2/RB10
PGC2/EMUC2/TMS/PWM1L3/RP11/CN15/PMD1/RB11
PWM1H2/RP12/CN14/PMD0/RB12
PWM1L2/RP13/CN13/PMRD/RB13
PWM1H1/RTCC/RP14/CN12/PMWR/RB14
PWM1L1/RP15/CN11/PMCS1/RB15
QXRF
BTN1
XTAL1
XTAL2
CNY
ENCDB
QXR
QXL
QXLF
ENCDA
TX_SIDE
TX_FRONT
LED1
ENCIB
ENCIA
PGD
PGC
PWM_I
DIR_I
PWM_D
DIR_D
C1
Tantalio
10uF
C2
100nF
C3
10uF
C11
100nF
VCC
GND
R11
47K
R12
180
Q3
J6
BTN2
LED2
Expansion de UI. Conectar a PGD/PGC
R13
1K
DON
R14
1K
D1
R17
1K
D2
LED1
LED2
U4
ROB-14450
VBAT
VM
STBY
PWMA
IN A1
IN A2
PWMB
IN B1
IN B2
OUT A1
OUT A2
OUT B1
OUT B2
MOTI1
MOTI2
MOTD1
MOTD2
J3
Motor Izquierda
J4
Motor Derecha
MOTD2
MOTD1
ENCDA
ENCDB
R15
10K
R16
10K
B1
B2
XTAL1
XTAL2
X1
20MHz
C5
18pF
C4
18pF
QXR
TEFT4300
QXL
TEFT4300
QXRF
TEFT4300
QXLF
TEFT4300
R7
1K8
R8
1K8
R9
1K8
R10
1K8
5V
R5
10k
R6
10K
Q1
Q2
SFH4545
TXR
TXL
TXRF
TXLF
R1
12
R2
12
R3
12
R4
12
J1
Header 1x2
J2
Header 1x2
S1
U2
LM78T05
U3
LM1086
IN
OUT
C8
10uF
C6
100nF
C7
100nF
C10
100nF
J5
PICkit
MCLR
PGD
PGC
Title
Size
A4
Number
Revision
Date:
24/9/2019
Sheet of
File:
C:\Users\..\PCB.SchDoc
Drawn By: