WEVAC

MODEL V23

Vacuum Sealer

User Manual

Please read this manual carefully before use and keep it for future reference.
Product illustrations are for reference only; actual product may vary.

Contents

01 Safety Instructions 3

02 Product & Vacuum Bag Tips 4

03 Product Structure 5

04 Control Panel Functions 6

05 Specifications 7

06 Operating Instructions 8

07 Troubleshooting 12

08 Maintenance 14

09 Vacuum Packaging Guide 15

10 Brand & Warranty 17

01 Safety Instructions

WARNING

- This appliance is for household use only. Do not use it for any purpose other than its intended use.
- Do not allow children to play with the appliance or power cord. Children, persons with reduced physical or cognitive abilities should use this appliance only under adult supervision. Keep children away during operation to prevent accidents.
- Small parts and vacuum bags may pose a choking hazard. Keep them out of reach of children.
- Do not use this appliance in high-humidity or high-temperature environments. Never use it in the presence of flammable or explosive gases.
- Ensure the power supply voltage matches the rating on the appliance nameplate.
- Do not leave the appliance unattended while in operation.
- After sealing, the seal area is hot. Do not touch it to avoid burns.
- Disconnect the power supply after use.
- When unplugging, grasp the plug itself. Do not pull on the power cord.
- Do not immerse the main unit or power cord in water or any other liquid.
- The power cord must be plugged directly into a properly grounded electrical outlet.
- If the plug, power cord, or main unit is damaged, stop using the appliance immediately and contact the manufacturer or an authorized service center. Do not attempt to repair it yourself.
- Do not let the power cord hang over the edge of a table or counter, as children may pull it or someone may trip over it.

CAUTION

- Please keep this manual for future reference.
- This appliance does not require any lubricant. Do not use organic solvents for cleaning.
- When not in use for an extended period, do not lock the latch, as this may cause the sealing gasket to deform under pressure.
- Do not dispose of this product with household waste. Please recycle or dispose of it in accordance with local regulations for electronic waste.

NOTICE

- This product is intended for household food preservation use.
- Please read this manual completely before first use.
- Please retain your proof of purchase for warranty service.

02 Product & Vacuum Bag Tips

- This appliance is only compatible with vacuum bags that have air-channel texture.
- For items with sharp points or edges, wrap them with puncture-proof pads, paper towels, or other soft material to prevent puncturing the vacuum bag.
- Vacuum bags can be used for heating or microwave reheating, but you must first cut a small opening at a corner of the bag to allow ventilation.
- Vacuum bags used for storage can be reused, but bags used for heating or microwaving should only be used once. Bags that have stored seafood or greasy food are not recommended for reuse.
- When placing the bag, the bag opening must lie flat across the heating element.
- When filling the bag, always leave at least 2 inches (5 cm) of space between the food and the bag opening.
- When packing liquids, sauces, or food containing liquid, avoid getting the bag opening wet. It is recommended to wipe the bag opening dry after filling to ensure a proper seal.
- If you want soft, high-moisture food to maintain its shape after packaging, consider freezing it before vacuum sealing.
- Do not place heavy objects on the top lid, as this may damage the appliance.

03 Product Structure

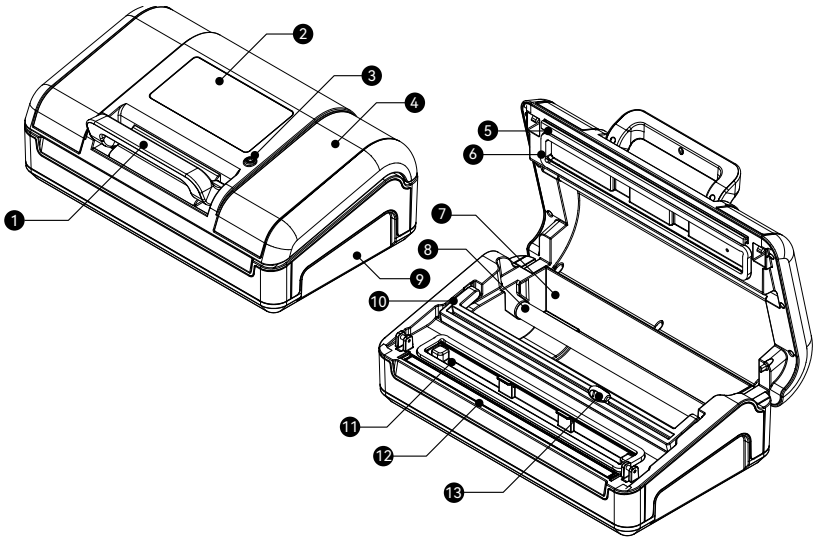

Fig. 1 — Product Structure

No.	Part Name	No.	Part Name
1	Latch Handle	8	Roll Bag Support Rod
2	Control Panel	9	Main Body
3	External Vacuum Port	10	Cutter Bracket
4	Top Lid	11	Drip Tray (Vacuum Chamber below)
5	Sealing Strip	12	Heat Tape & Heating Element
6	Sealing Gasket	13	Bag Cutter
7	Roll Bag Compartment		

NOTICE

After operation, the heating element is very hot. Do not touch it to avoid burns!

04 Control Panel Functions

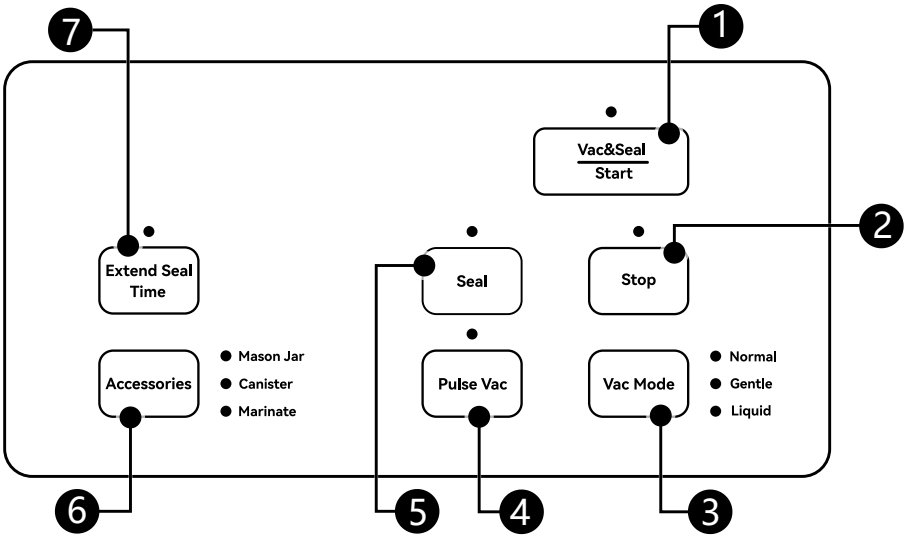

Fig. 2 — Control Panel

Button	Function
`Vac&Seal / Start`	Press this button to start the selected mode.
`Stop`	Press this button at any time during operation to stop the current process.
`Vac Mode`	**Normal** (default pressure) / **Gentle** (reduced pressure) / **Liquid** (for liquid-containing items)
`Pulse Vac` — Manual Vacuum	Press and hold to manually control vacuuming; release to pause. Once the desired vacuum level is reached, press `Seal` to seal.
`Seal`	Press this button to immediately start the sealing process.
`Accessories`	**Mason Jar** / **Canister** / **Marinate**
`Extend Seal Time`	Press before starting an operation to extend the sealing time.

05 Specifications

Parameter	Specification
Voltage	**110~120 Vac**
Frequency	**60 Hz**
Power	**190 W**
Pump	**Dual Pump**
Vacuum Pressure	**-28.3 inHg**
Heating Wire Width	**0.07 inch × 2**
Max Bag Width	**12.4 inch**
Dimensions (L × W × H)	**15 × 8.1 × 6.1 inch**
Weight	**6.6 lb**

06 Operating Instructions

6.1 How to Use the Bag Cutter

1. Open the top lid.
2. Open the cutter bracket.
3. Pull out the desired length of bag from the roll.
4. Move the bag cutter to the far left or right, then press the cutter bracket down onto the bag.
5. Press down and slide the bag cutter across the bag for a clean cut.

6.2 How to Use the Seal Function

Making a bag from a roll and sealing it:

1. Follow the bag cutter instructions above to cut a bag with two open ends.
2. Place one open end of the bag flat into the vacuum chamber.
3. Close the top lid and press the latch handle down to lock it.
4. Press the `Seal` button and wait for the machine to finish.

Sealing a bag only:

1. Place the item to be sealed into the bag, then place the bag opening into the vacuum chamber.
2. Close the top lid and press the latch handle down to lock it.
3. Press the `Seal` button and wait for the machine to finish.

6.3 How to Extend Seal Time

> To extend the sealing time, press the `Extend Seal Time` button before starting an operation so that its indicator light turns on. The extended time setting will remain active. To restore the default sealing time, press the button again before the next operation. When the machine enters standby mode or is powered off and back on, the sealing time will reset to default.

CAUTION

When the Extend Seal Time function is enabled, the smart seal adjustment feature is temporarily disabled. During continuous operation, allow at least 20 seconds between each cycle and open the top lid to let the machine cool down.

06 Operating Instructions (cont.)

6.4 How to Use the Vacuum Seal Function

Vacuum sealing solid items:

1. Place the bag opening into the vacuum chamber.
2. Close the top lid and press the latch handle down to lock it.
3. Press the `Vac Mode` button to select a mode: **Normal** or **Gentle** .
4. Press the `Vac&Seal / Start` button to begin.
5. To stop the process at any time, press the `Stop` button.

> Before using Gentle mode on valuable or delicate items, it is recommended to test with other items first to check whether the compression level is acceptable, to avoid crushing the contents.

Vacuum sealing liquids:

1. Keep the bag upright. Ensure the liquid level stays below the heating element, and leave at least 7 inches (18 cm) of space between the liquid and the bag opening.
2. Place the bag opening into the vacuum chamber.
3. Close the top lid and press the latch handle down to lock it.
4. Press the `Vac Mode` button to select **Liquid** mode.
5. Press the `Vac&Seal / Start` button to begin.

6.5 How to Use Manual Vacuum

Method 1 (Switch to Pulse Vac during automatic vacuum):

1. Press and hold the `Pulse Vac` button to vacuum.
2. Release the button to pause vacuuming.
3. Once the desired vacuum level is reached, press the `Seal` button to seal.

Method 2 (Use Pulse Vac directly):

1. Place the bag opening into the vacuum chamber.
2. Close the top lid and press the latch handle down to lock it.
3. Press and hold the `Pulse Vac` button to vacuum.
4. Release the button to pause vacuuming.
5. Once the desired vacuum level is reached, press the `Seal` button to seal.

> During manual vacuum, press and hold the button to vacuum, release to pause — the machine will hold pressure. If no further action is taken within 10 seconds, the machine will automatically release pressure and exit manual vacuum mode.

06 Operating Instructions (Accessories)

6.6 Vacuum Hose Usage

- When vacuuming mason jar adapters and valve-equipped zipper bags, use the round nozzle in orientation 1.
- When vacuuming canisters and bottle stoppers, choose orientation 1 or 2 depending on the size of the vacuum port.
- The flat nozzle 3 of the vacuum hose connects to the external vacuum port 3 on the top lid.

6.7 How to Vacuum a Mason Jar

1. Close the top lid of the machine.
2. Place the jar lid on the mason jar opening. Do not screw on the threaded ring (if applicable).
3. Attach the adapter onto the mason jar.
4. Insert the flat nozzle of the vacuum hose into the external vacuum port on the top lid.
5. Press the latch handle down to lock the top lid.
6. Press the `Accessories` button and select **Mason Jar** .
7. Place the round nozzle of the vacuum hose over the adapter's vacuum port and press down gently with your hand.
8. Press the `Vac&Seal / Start` button to begin.
9. When finished, remove the vacuum hose and adapter.

6.8 How to Vacuum a Canister

1. Before starting, confirm that the canister is compatible with this machine's vacuum hose.
2. Ensure the canister is in the vacuum-ready (Vacuum) position.
3. Insert the flat nozzle of the vacuum hose into the external vacuum port on the top lid.
4. Press the latch handle down to lock the top lid.
5. Press the `Accessories` button and select **Canister** .
6. Place the round nozzle of the vacuum hose over the canister's vacuum valve port and press down gently.
7. Press the `Vac&Seal / Start` button to begin.
8. When finished, remove the vacuum hose.

6.9 How to Marinate

1. Cover the food with marinade and place it in a vacuum canister.
2. Ensure the canister is in the vacuum-ready (Vacuum) position.
3. Insert the flat nozzle of the vacuum hose into the external vacuum port on the top lid.
4. Place the round nozzle of the vacuum hose into the canister's vacuum valve port.
5. Press the latch handle down to lock the top lid.
6. Press the `Accessories` button and select **Canister** .
7. Press the `Vac&Seal / Start` button to begin.
8. When finished, remove the vacuum hose.

6.10 Roll Bag Compartment Guide

- This machine can hold two rolls of bags at the same time (e.g., two rolls of 20 feet / 6 m or shorter).
- If using a single roll, the maximum length is 50 feet (15 m).
- The roll bag compartment accommodates rolls up to 12 inches (300 mm) wide. A dedicated slot at the bottom is designed for rolls 8 inches (200 mm) wide or narrower.

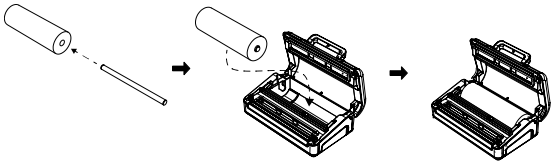

Fig. 11 — Single Roll Placement

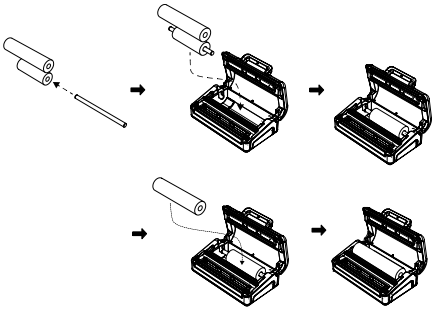

Fig. 12 — Dual Roll Placement

07 Troubleshooting

Problem	Possible Cause	Solution
Machine does not power on	Power cord not properly plugged in	Ensure the power cord is securely plugged in.
	Power cord is cracked or damaged	Disconnect power and inspect the cord. If damaged, contact a qualified technician for replacement.
	Control board or ribbon cable connector is loose	Contact a qualified technician for repair.
Incomplete vacuum	Bag opening is not fully within the sealing gasket area	Ensure the entire bag opening is within the lower vacuum chamber sealing gasket.
	Non-textured vacuum bags used	Ensure you are using vacuum bags with air-channel texture.
	Sealing gasket is damaged, flipped, or improperly installed	Inspect the sealing gasket and install it correctly.
	Bag is damaged or has pinholes	Replace with a new vacuum bag.
	Debris at the bag opening preventing a complete seal	Clean the bag opening and try again.
	Excessive heat from prolonged sealing	Open the top lid and let the machine cool down before using again.
Cannot seal or poor seal quality	Bag opening not properly placed on the heating element	Reposition the bag opening so it lies flat across the heating element.
	Moisture, particles, or debris in the seal area	Clean the seal area and try again.
	Sealing strip not installed	Install the sealing strip.
	Default seal time is insufficient	Press `Extend Seal Time` to extend the sealing time and try again.
Bag leaks after vacuum sealing	Heat tape is damaged or peeling off	Replace the heat tape promptly.
	Abnormal heating temperature causing bag to melt or seal insufficiently	Refer to the solutions for "Incomplete vacuum" and "Cannot seal" above.
	Sharp items punctured the bag	Wrap sharp edges with paper towels or puncture-proof pads and use a new bag.

Problem	Possible Cause	Solution
Accessories mode cannot vacuum	Flat nozzle of vacuum hose not fully inserted into the external vacuum port	Firmly twist and push the flat nozzle down until fully inserted.
	Latch handle not pressed down to lock the top lid	Press the latch handle down to lock the top lid and try again.
	Debris on the sealing gasket or vacuum chamber	Open the top lid, remove debris, close the lid, and try again.
Error alarm (continuous beep + flashing indicator)	Alarm after pressing Vac&Seal/Start or Seal	Check that the top lid is closed and the latch handle is pressed down and locked.
	Continuous beeping during vacuum operation	The machine cannot reach the target pressure. Check that the latch handle is locked and the bag is not damaged. Replace with a new bag and try again.

> **NOTICE**
> Some fruits and vegetables may release gases if not properly blanched before packaging, or if packed while still hot. This can cause the vacuum bag to appear loose — this is normal and does not indicate a leak.

> If the above troubleshooting steps do not resolve the issue, please contact customer support for assistance. Do not disassemble the machine yourself.

07 Troubleshooting (cont.)

What to Do If Liquid Enters the Machine

Liquid enters the vacuum chamber:

1. Immediately turn off the power and wait at least 5 minutes for the heating element to cool down.
2. Remove the drip tray and clean up the liquid.
3. Wipe dry any liquid in the vacuum chamber.
4. Place paper towels or a tray under the machine, then reconnect the power.
5. Close the top lid, press and hold the `Pulse Vac` button for 20 seconds, then press `Stop` to release air. Repeat 5 times to expel liquid from the internal tubing.
6. Open the top lid, place paper towels or a tray under the machine, and leave it in a well-ventilated area to dry for 48 hours. Do not tip the machine over during this time.

Liquid enters the heating element:

1. Do not tip the machine over. Turn off the power and wait 10 minutes for the heating element to cool and internal liquid to drain.
2. Clean and dry the drip tray, vacuum chamber, and any liquid under the machine.
3. Open the top lid, place paper towels or a tray under the machine, and leave it in a well-ventilated area to dry for 24 hours. Do not tip the machine over.
4. Place paper towels or a tray under the machine, then reconnect the power.
5. Close the top lid, press and hold the `Pulse Vac` button for 20 seconds, then press `Stop` to release air. Repeat 5 times to expel liquid from the internal tubing.
6. Open the top lid, place paper towels or a tray under the machine, and leave it in a well-ventilated area to dry for 48 hours. Do not tip the machine over during this time.

CAUTION

If the internal tubing is not cleaned regularly, it may become clogged over time, affecting vacuum performance. In this case, please contact customer support for tubing replacement.

08 Maintenance

- Ensure the work surface is flat, clean, and dry before using the machine.
- When the machine is not in use, do not lock the latch, as prolonged pressure may deform the sealing gasket and affect performance.
- Clean the sealing gasket, sealing strip, heating element, drip tray, and vacuum chamber at least once a week.
- The heating element and sealing strip remain hot after operation. Allow the machine to cool down before performing maintenance.
- Unplug the machine before cleaning.
- Use a soft brush to clean the sealing gasket, sealing strip, heating element, drip tray, vacuum chamber, and vacuum hose. Avoid using hard brushes, as they may damage the machine.
- After each day of use, remove the drip tray, clean and dry it, and wipe the vacuum chamber with a damp cloth or paper towel to remove any residual debris or dust.
- After each use, inspect the sealing gasket for significant deformation and the heat tape for damage or peeling. Replace promptly if needed.
- The drip tray and vacuum hose are not dishwasher-safe and should not be cleaned with high-temperature methods.

09 Vacuum Packaging Guide

Vacuum packaging extends the shelf life of food by removing most of the air from a sealed container and preventing air from re-entering, thereby reducing oxidation. Vacuum packaging helps preserve flavor and overall quality. It also helps inhibit the growth of aerobic microorganisms. Under certain conditions, the following may occur:

- **Mold** — Mold cannot thrive in low-oxygen environments. Vacuum packaging effectively inhibits mold growth.
- **Yeast** — Yeast requires water, sugar, and moderate temperatures to grow, and can survive with or without air. Refrigeration slows yeast growth; freezing effectively inhibits it.
- **Bacteria** — Bacteria cause unpleasant odors, discoloration, or softening. Under certain conditions, Clostridium botulinum can grow in the absence of air and cannot be detected by smell or taste.

As with any storage method, it is important to inspect food for spoilage before consumption. At temperatures of 25 °F (-4 °C) or lower, microbial growth is significantly reduced. For long-term storage, vacuum sealing followed by freezing is recommended.

NOTICE
Vacuum packaging is not a substitute for refrigeration or freezing. Any perishable food that requires refrigeration must still be kept refrigerated or frozen after vacuum packaging.

Storage Tips

- Vegetables should be blanched before vacuum packaging. Place vegetables in boiling water until cooked, then immerse in cold water. Pat dry with a towel before vacuum packaging.
- Cruciferous vegetables (broccoli, Brussels sprouts, cabbage, etc.) naturally release gases during storage. After cooking and vacuum sealing, store them in the refrigerator.
- Never vacuum-store garlic, mushrooms, or other fungi. Harmful substances may develop under vacuum conditions, posing a health risk if consumed.

09 Vacuum Packaging Guide (cont.)

Food Vacuum Storage Reference

Storage Method	Food Category	Normal Storage	Vacuum Sealed
Frozen Storage	Meat	6 months	15–20 months
	Fish & Seafood	6 months	10–12 months
	Dried Fruits & Coffee Beans	6–9 months	18–24 months
Refrigerated Storage	Meat	2–3 days	12–13 days
	Fish & Seafood	2–3 days	6–8 days
	Cooked Meat	2–3 days	10–14 days
	Eggs	2–3 days	30–50 days
	Vegetables	2–3 days	7–10 days
Room Temperature Storage	Bread	1–2 days	6–8 days
	Boxed Crackers	4–6 months	12 months
	Noodles / Pasta	5–6 months	12 months
	Rice	5–6 months	12 months
	Flour	4–5 months	12 months
	Dried Goods	3–4 months	12 months
	Coffee / Tea / Milk Powder	2–6 months	12 months

10 Brand & Warranty

Thank you for choosing Wevac Vacuum Sealer. For support, contact us at:
support@wevactech.com | www.wevactech.com

Brand Information

Brand	**WEVAC TECHNOLOGY CO., LIMITED**
Address	FLAT/RM 404A BEVERLEY COMMERCIAL CENTRE 87-105 CHATHAM ROAD SOUTH TSIM SHA TSUI KL HONG KONG
Website	www.wevactech.com
Customer Support	support@wevactech.com

Manufacturer

Manufacturer	**Guangzhou Argion Electric Appliance Co., Ltd.** 广州亚俊氏真空科技股份有限公司
Address	No. 1, Qiye Road, Nancun Town, Panyu District, Guangzhou, Guangdong, China
Website	www.argiontechnology.com

Warranty Information

This product comes with a **2-year limited warranty**. Warranty replacement service is available within 2 years from the original date of purchase. To be eligible for warranty replacement, you must:

- Have purchased the product within the past 2 years.
- Have the original order number or the email address used at the time of purchase.
- If purchased through a dealer or retail partner, provide a copy of the original receipt.

To request warranty service, send us an email at: **support@wevactech.com**

Warranty Card

Customer Name	
Address	
City / State / ZIP Code	
Phone Number	
Email Address	
Original Purchase Date	
Product Model	
Serial Number (if applicable)	
Retailer Name	