WEVAC

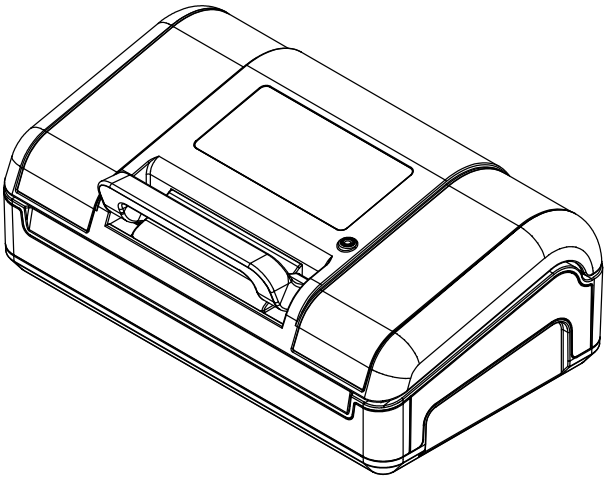

MODEL V23

VACUUM SEALER

USER MANUAL

Please read this manual carefully before use and keep it for future reference.
All illustrations of products and accessories in this manual are for reference only. Due to product updates and upgrades, actual products may differ slightly from illustrations.

CONTENTS

01 Safety Instructions 3
02 Product & Vacuum Bag Tips 4
03 Product Structure 5
04 Product Functions 6
05 Specifications 7
06 Operation Guide 8
07 Troubleshooting 12
08 Maintenance 15
09 Vacuum Packaging Properties 16
10 Brand & Warranty Information 18

01 SAFETY INSTRUCTIONS

WARNING

- This machine is for household use only. Do not use for any purpose other than its intended design.
- Do not allow children to play with the machine or power cord. Children and persons with reduced physical, sensory or mental capabilities should use the machine under adult supervision. Supervise children during use to prevent accidents.
- Small parts and vacuum bags may pose a choking hazard. Keep out of reach of children.
- Do not use the machine in high humidity, high temperature, or other unsuitable environments. Never use in the presence of flammable or explosive gases.
- Ensure the power supply voltage matches the rating on the machine nameplate.
- Do not leave the machine unattended while it is operating.
- After sealing, the seal area is very hot. Do not touch to avoid burns.
- Disconnect the power supply after use.
- When unplugging from the outlet, grasp the plug firmly. Do not pull on the power cord.
- Do not immerse the main unit or power cord in water or any other liquid.
- The power cord must be plugged directly into a properly grounded outlet that meets safety standards.
- If the plug, power cord, or main unit is damaged, stop use immediately and contact the manufacturer or authorized service center. Do not attempt to repair yourself.
- Do not let the power cord hang over the edge of the counter, where children could pull it or someone could trip.

CAUTION

- Keep this manual in a safe place.
- This machine does not require lubrication. Do not clean with organic solvents.
- When not in use for extended periods, do not engage the latch to avoid deforming the seal gasket under pressure.
- Do not dispose of this product with household waste. Recycle or dispose of according to your local regulations for electronic waste.

NOTICE

- This product is intended for household food preservation.
- Read this manual in full before first use.
- Retain your proof of purchase for warranty service.

02 PRODUCT & VACUUM BAG TIPS

- This machine is only compatible with vacuum bags that have air channel grooves.
- For items with sharp points or edges, wrap corners with puncture-resistant sheets, paper towels, or other soft materials to prevent puncturing the vacuum bag.
- Vacuum bags may be used for heating or microwave heating, but you must first cut a small vent in a corner of the bag.
- Vacuum bags used for storage can be reused, but bags used for heating or microwave heating should be used only once. Bags that have stored seafood or oily foods are not recommended for reuse.
- When placing the bag, the bag opening must lie flat across the heating element.
- When filling bags, always leave at least 2 inch (5 cm) of space between the bag opening and the food.
- When sealing liquids, sauces, or foods with liquid, avoid wetting the bag opening. Wipe the opening dry before sealing to ensure a proper seal.
- For soft, high-moisture foods that need to retain their shape after packaging, consider freezing before vacuum sealing.
- Do not place heavy objects on the lid, as this may damage the machine.

03 PRODUCT STRUCTURE

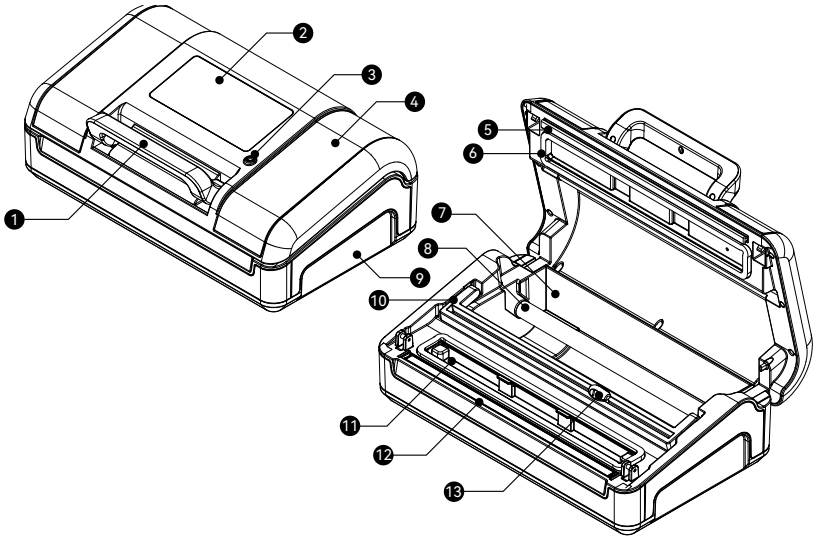

FIG. 1 — PRODUCT STRUCTURE

NO.	NAME	NO.	NAME
1	Latch Handle	8	Roll Bag Support Tube
2	Control Panel	9	Main Body
3	External Vacuum Port	10	Bag Cutter Bracket
4	Top Lid	11	Drip Tray (Vacuum Chamber Below)
5	Sealing Gasket Strip	12	Heat-resistant Tape & Heating Element
6	Sealing Ring	13	Bag Cutter
7	Roll Bag Compartment		

NOTE
After operation, the heating element is very hot. Do not touch to avoid burns!

04 PRODUCT FUNCTIONS

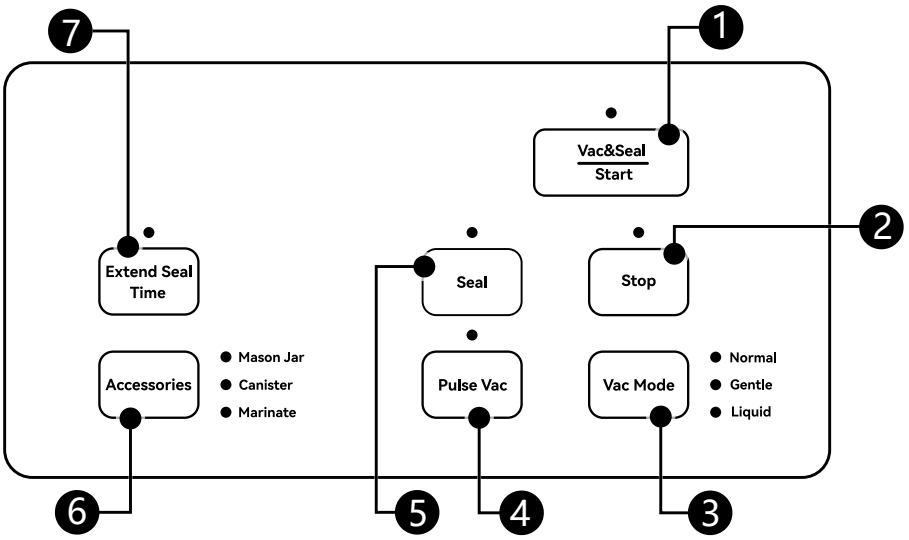

FIG. 2 — CONTROL PANEL

NO. / BUTTON	DESCRIPTION
1 `Vac&Seal / Start` Vacuum Seal / Start	Press this button to start the selected mode.
2 `Stop` Stop	Press this button during any process to stop the operation.
3 `Vac Mode` Vacuum Mode Selection	**Normal** (default pressure) / **Gentle** (light pressure) / **Liquid** (liquid items)
4 `Pulse Vac` Manual Vacuum	Press and hold for manual vacuum control; release to pause. Press Seal when desired level is reached.
5 `Seal` Seal	Press this button to seal immediately.
6 `Accessories` Accessories	**Mason Jar** / **Canister** / **Marinate**
7 `Extend Seal Time` Extend Seal Time	Press before operation to extend sealing time.

05 SPECIFICATIONS

PARAMETER	SPECIFICATION
Voltage	220~240 Vac
Frequency	50 Hz
Power	190 W
Pump	Dual Pump
Vacuum Pressure	-958 mbar
Sealing Wire Width	1.8 mm × 2
Max Bag Width	315 mm
Dimensions (L×W×H)	380 × 205 × 155 mm
Weight	3.0 kg

06 OPERATION GUIDE

6.1 HOW TO USE THE BAG CUTTER

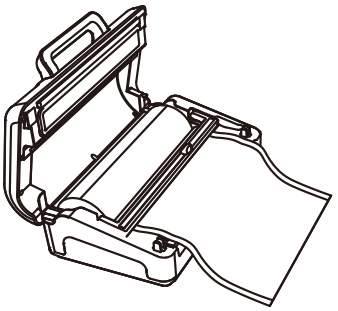

1. Open the lid.
2. Open the bag cutter holder.
3. Pull the desired length of bag from the roll.
4. Move the bag cutter to the far left or right, then press the holder down onto the bag.
5. Press the bag cutter down and slide it across the bag for a clean cut.

6.2 HOW TO USE THE SEAL FUNCTION

Making a bag from a roll and sealing:

1. Create an open-ended bag using the bag cutter steps above.
2. Place one open end of the bag flat into the vacuum chamber.
3. Close the lid and press the handle down to lock.
4. Press the `Seal` button and wait for the machine to complete.

Sealing a bag only:

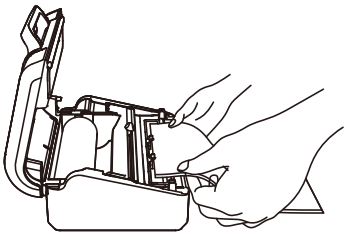

1. Place items in the bag and put the bag opening into the vacuum chamber.
2. Close the lid and press the handle down to lock.
3. Press the `Seal` button and wait for the machine to complete.

6.3 HOW TO EXTEND SEAL TIME

> To extend seal time, press the `Extend Seal Time` button before operation so its indicator lights up. The extended time setting remains in effect. To restore default seal time, press the button again before the next operation. When the machine enters sleep mode or is powered off and on again, seal time will revert to the default setting.

CAUTION

When Extend Seal Time is enabled, smart seal adjustment is temporarily disabled. Allow more than 20 seconds between consecutive operations and open the lid for cooling.

06 OPERATION GUIDE (CONT.)

6.4 HOW TO USE VACUUM SEAL

Vacuum sealing solid items:

1. Place the bag opening into the vacuum chamber.
2. Close the lid and press the handle down to lock.
3. Press the `Vac Mode` button to select **Normal** or **Gentle** mode.
4. Press the `Vac&Seal / Start` button to start.
5. To stop, press the `Stop` button.

> Before using Gentle mode for delicate items, test with other items first to ensure the compression level meets your needs and does not crush the contents.

Vacuum sealing liquids:

1. Keep the bag upright so the liquid level stays below the heating element. Leave about 7 inch (18 cm) of space between the liquid and the bag opening.
2. Place the bag opening into the vacuum chamber.
3. Close the lid and press the handle down to lock.
4. Press the `Vac Mode` button to select **Liquid** mode.
5. Press the `Vac&Seal / Start` button to start.

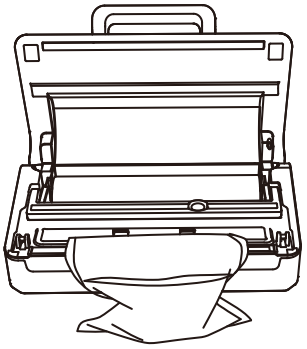

6.5 HOW TO USE MANUAL VACUUM

Method 1 (Switch to Pulse Vac during auto vacuum):

1. Hold the `Pulse Vac` button to vacuum.
2. Release the button to pause.
3. When the desired vacuum level is reached, press the `Seal` button to seal.

Method 2 (Direct Pulse Vac mode):

1. Place the bag opening into the vacuum chamber.
2. Close the lid and press the handle down to lock.
3. Hold the `Pulse Vac` button to vacuum.
4. Release the button to pause.
5. When the desired vacuum level is reached, press the `Seal` button to seal.

> During manual vacuum, holding the button runs the pump and releasing pauses it (pressure is maintained). If no action is taken within 10 seconds, the machine will automatically release pressure and exit manual vacuum mode.

06 OPERATION GUIDE (ACCESSORIES)

6.6 VACUUM HOSE USAGE

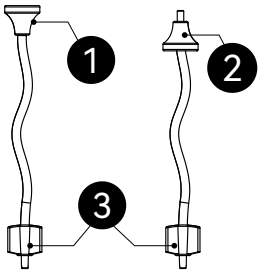

- For Mason jar adapters and valve zipper bags, use the round nozzle in orientation 1.
- For vacuum canisters and bottle stoppers, choose orientation 1 or 2 depending on the valve size.
- The flat nozzle 3 on the vacuum hose connects to the external vacuum port 3 on the machine lid.

6.7 HOW TO VACUUM MASON JARS

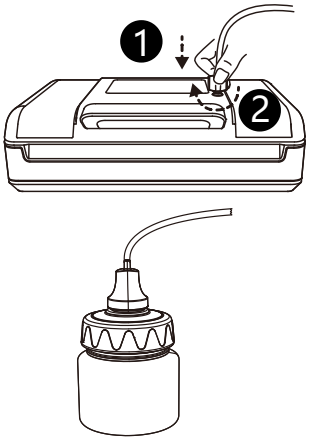

1. Close the machine lid.
2. Place the lid on the Mason jar mouth without screwing on the ring (if present).
3. Attach the adapter to the Mason jar.
4. Insert the vacuum hose flat nozzle into the external vacuum port on the machine lid.
5. Press the handle down to lock the lid.
6. Press the `Accessories` button and select **Mason Jar** .
7. Cover the adapter vacuum port with the vacuum hose round nozzle and press gently with your hand.
8. Press the `Vac&Seal / Start` button to start.
9. When done, remove the vacuum hose and adapter.

6.8 HOW TO VACUUM CANISTERS

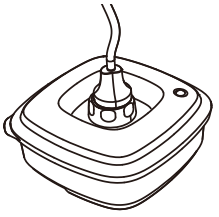

1. Before use, confirm the canister is compatible with this machine's vacuum hose.
2. Confirm the canister is in Vacuum mode.
3. Insert the vacuum hose flat nozzle into the external vacuum port on the machine lid.
4. Press the handle down to lock the lid.
5. Press the `Accessories` button and select **Canister** .
6. Cover the canister valve vacuum port with the vacuum hose round nozzle and press gently.
7. Press the `Vac&Seal / Start` button to start.
8. When done, remove the vacuum hose.

06 OPERATION GUIDE (CONT.)

6.9 HOW TO MARINATE

1. Cover food with marinade and place in the vacuum canister.
2. Confirm the canister is in Vacuum mode.
3. Insert the vacuum hose flat nozzle into the external vacuum port on the machine lid.
4. Insert the vacuum hose round nozzle into the valve vacuum port.
5. Press the handle down to lock the lid.
6. Press the `Accessories` button and select **Canister** .
7. Press the `Vac&Seal / Start` button to start.
8. When done, remove the vacuum hose.

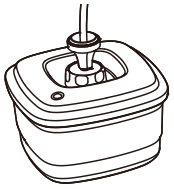

6.10 ROLL BAG COMPARTMENT GUIDE

- This machine can hold two rolls at once (e.g., two rolls up to 20 ft / 6 m each).
- When using a single roll, maximum length is 50 ft (15 m).
- The roll compartment accepts rolls up to 12 inch (300 mm) wide. A dedicated slot is provided for rolls up to 8 inch (200 mm) wide.

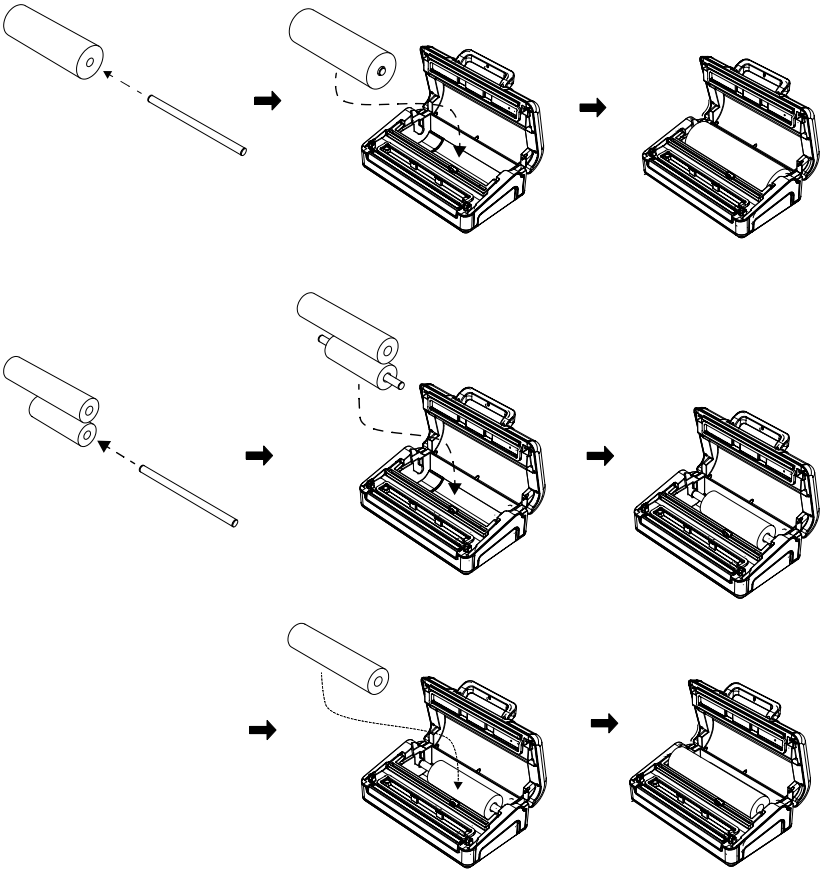

07 TROUBLESHOOTING

PROBLEM	POSSIBLE CAUSE	SOLUTION
Will not power on	Power cord not properly plugged in	Ensure the power cord is properly inserted.
	Power cord damaged or frayed	Unplug and inspect the power cord. If damaged, have it replaced by a qualified technician.
	Control board or panel cable connector loose	Contact a qualified technician for repair.
Poor vacuum / air remains	Bag opening not fully inside the seal gasket	Ensure the entire bag opening is inside the lower vacuum chamber seal gasket.
	Using non-grooved vacuum bags	Use vacuum bags with air channel grooves.
	Seal gasket damaged, flipped, or incorrectly installed	Check the seal gasket and install correctly.
	Bag punctured or has pinholes	Replace with a new vacuum bag.
	Debris on bag opening causing incomplete seal	Clean the bag opening and try again.
	Seal time too long, causing overheating	Open the lid and let the machine cool before using again.
Will not seal or poor seal	Bag opening not correctly placed on heating element	Reposition the bag opening so it lies flat across the heating element.
	Moisture, particles, or debris on seal area	Clean the seal area and try again.
	Seal bar not installed	Install the seal bar.
	Default seal time insufficient	Press `Extend Seal Time` and try again.
Bag leaks after vacuum seal	High-temperature tape damaged or detached	Replace the high-temperature tape promptly.
	Abnormal heating causing bag melt or insufficient seal	See solutions for poor vacuum and will not seal.
	Sharp items punctured the bag	Wrap sharp edges with paper towels or puncture-resistant sheets and use a new bag.

NOTE
Some fruits and vegetables release gas if not properly blanched before packaging, or when hot. This can cause the vacuum bag to appear loose. This is normal and not a leak.

If the above solutions do not resolve the issue, contact customer service. Do not disassemble the machine yourself.

07 TROUBLESHOOTING (ACCESSORIES & ALARMS)

PROBLEM	POSSIBLE CAUSE	SOLUTION
Accessories mode will not vacuum	Vacuum hose flat nozzle not fully inserted into external port	Firmly twist and press the flat nozzle until fully inserted.
	Lid handle not pressed down to lock	Press the handle down to lock the lid and try again.
	Debris on seal gasket or vacuum chamber	Open the lid, remove debris, close, and try again.
Error alarm (continuous beep + fast flashing indicator)	Alarm when pressing Vac&Seal/Start or Seal	Check that the lid is closed and the handle is pressed down to lock.
	Continuous beeping during vacuum	Machine cannot reach target pressure. Check handle lock and bag for damage. Try a new bag.

07 TROUBLESHOOTING (CONT.)

RECOVERY PROCEDURE IF LIQUID ENTERS THE MACHINE

If liquid enters the vacuum chamber:

1. Turn off power immediately. Wait at least 5 minutes for the heating element to cool.
2. Remove the liquid tray and wipe dry.
3. Wipe the liquid from the vacuum chamber.
4. Place kitchen paper or a tray under the machine and power on again.
5. Close the lid, hold the `Pulse Vac` button for 20 seconds, then press `Stop` to release. Repeat 5 times to expel liquid from internal tubing.
6. Open the lid, place kitchen paper or a tray under the machine, and let it air dry in a ventilated area for 48 hours. Do not tilt the machine during this time.

If liquid enters the heating element:

1. Do not tilt the machine. Turn off power and wait 10 minutes for the heating element to cool and internal liquid to drain.
2. Clean and wipe liquid from the drip tray, vacuum chamber, and bottom of the machine.
3. Open the lid, place kitchen paper or a tray under the machine, and let it air dry in a ventilated area for 24 hours. Do not tilt the machine during this time.
4. Place kitchen paper or a tray under the machine and power on again.
5. Close the lid, hold the `Pulse Vac` button for 20 seconds, then press `Stop` to release. Repeat 5 times to expel liquid from internal tubing.
6. Open the lid, place kitchen paper or a tray under the machine, and let it air dry in a ventilated area for 48 hours. Do not tilt the machine during this time.

CAUTION

If not cleaned regularly, internal tubing may become clogged and affect vacuum performance. Contact customer service for tubing replacement.

08 MAINTENANCE

- Ensure the work surface is flat, clean, and dry.
- When not in use, do not engage the latch to avoid compressing the seal gasket and affecting performance.
- Clean the seal gasket, seal bar, heating element, liquid tray, and vacuum chamber weekly.
- The heating element and seal bar remain hot after use. Allow the machine to cool before maintenance.
- Unplug the machine before cleaning.
- Use a soft brush to clean the seal gasket, seal bar, heating element, liquid tray, vacuum chamber, and vacuum hose. Avoid stiff brushes to prevent damage.
- After each day's use, remove and clean the liquid tray, wipe dry, and use a damp cloth or paper towel to remove debris and dust from the vacuum chamber.
- After each use, check if the seal gasket is severely deformed or if the high-temperature tape is damaged or detached. Replace if needed.
- The liquid tray and vacuum hose are not dishwasher safe.

09 VACUUM PACKAGING PROPERTIES

Vacuum packaging extends food life by removing most of the air from a sealed container and preventing air from re-entering, thereby reducing oxidation. It helps preserve flavor and overall quality. It also helps inhibit the growth of aerobic microorganisms. Under certain conditions, the following may occur:

- **Mold** — Mold cannot grow in low-oxygen environments. Vacuum packaging inhibits mold growth.
- **Yeast** — Yeast needs water, sugar, and moderate temperature to grow. It can survive with or without air. Refrigeration slows yeast growth; freezing effectively inhibits it.
- **Bacteria** — Causes off odors, discoloration, or softening. Under the right conditions, Clostridium botulinum can grow without air and cannot be detected by smell or taste.

As with any storage method, it is important to check food for spoilage before eating. At -4°C or lower, microbial growth can be significantly reduced. For long-term storage, vacuum seal and keep frozen.

> **NOTICE**
> Vacuum packaging does not replace refrigeration or freezing. Any perishable food that requires refrigeration must remain refrigerated or frozen after vacuum packaging.

STORAGE GUIDE

- Vegetables must be blanched before vacuum packaging. Boil in water, then immerse in cold water, and pat dry with a towel before vacuum sealing.
- Cruciferous vegetables (broccoli, sprouts, cabbage, etc.) naturally release gas during storage. After cooking and vacuum sealing, store in the refrigerator.
- Never vacuum store garlic or mushrooms. Vacuuming can produce harmful substances that may affect health if consumed.

09 VACUUM PACKAGING PROPERTIES (CONT.)

VACUUM FRESHNESS DURATION REFERENCE

STORAGE METHOD	FOOD CATEGORY	REGULAR STORAGE	VACUUM PACKAGED
Frozen	Meat	6 months	15–20 months
	Fish & Seafood	6 months	10–12 months
	Nuts & Coffee Beans	6–9 months	18–24 months
Refrigerated	Meat	2–3 days	12–13 days
	Fish & Seafood	2–3 days	6–8 days
	Cooked Meat	2–3 days	10–14 days
	Eggs	2–3 days	30–50 days
	Vegetables	2–3 days	7–10 days
Room Temperature	Bread	1–2 days	6–8 days
	Boxed Crackers	4–6 months	12 months
	Noodles	5–6 months	12 months
	Rice	5–6 months	12 months
	Flour	4–5 months	12 months
	Dried Goods	3–4 months	12 months
	Coffee / Tea / Powdered Milk	2–6 months	12 months

10 BRAND & WARRANTY INFORMATION

Thank you for purchasing WEVAC Vacuum Sealer. If you have any questions, please contact us at: support@wevactech.com | www.wevactech.com

BRAND INFORMATION

Brand	**WEVAC TECHNOLOGY CO., LIMITED**
Address	FLAT/RM 404A BEVERLEY COMMERCIAL CENTRE 87-105 CHATHAM ROAD SOUTH TSIM SHA TSUI KL HONG KONG
Website	www.wevactech.com
Customer Support	support@wevactech.com

AUTHORIZED MANUFACTURER

Manufacturer	**广州亚俊氏真空科技股份有限公司** Guangzhou Argion Electric Appliance Co., Ltd.
Address	No. 1, Qiye Road, Nancun Town, Panyu District, Guangzhou, Guangdong, China
Website	www.argiontechnology.com

WARRANTY INFORMATION

This product comes with a **2-year limited warranty**. Warranty replacement is available for 2 years from the original purchase date. To qualify for warranty replacement, you must:

- Have purchased the product within the past 2 years.
- Have the original order number or the email used at purchase.
- If purchased through a dealer or retail partner, provide a copy of the original receipt.

Email us to apply for warranty service: **support@wevactech.com**

WARRANTY CARD

Customer Name	
Address	
City / State / Postal Code	
Phone Number	
Email Address	
Original Purchase Date	
Product Model	
Serial Number (if applicable)	
Merchant Name	