WEVAC

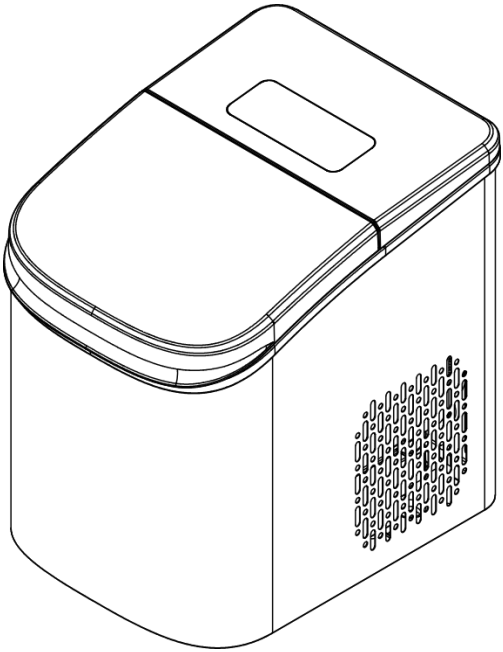

MODEL IMT050

Ice Maker

User Manual

CONTENTS

CH.01 — Safety	3–4
CH.02 — Before Use	5
CH.03 — Product Structure	6
CH.04 — Control Panel	7
CH.05 — Specifications	8
CH.06 — Operation	9
CH.07 — Cleaning & Maintenance	10
CH.08 — Troubleshooting	11
CH.09 — Brand & Warranty	12

SAFETY INSTRUCTIONS

For your safety, please read all instructions in this manual before using this electrical appliance and always follow these safety precautions:

WARNING

- This product is for household use only. Do not use for any unintended purpose.
- Do not allow children to play with this product or its power cord. Children and persons with limited mobility or cognitive ability should use it under adult supervision.
- Small parts may pose a choking hazard. Keep away from children.
- Do not use this product in high-humidity or high-temperature environments. Never use in the presence of flammable or explosive gases.
- Ensure the power supply voltage matches the rating on the product nameplate.
- Disconnect the power after use.
- When unplugging, grip the plug itself — do not pull the power cord.
- Do not immerse the unit or power cord in water or any other liquid.
- The power cord must be plugged directly into a properly rated electrical outlet.
- If the plug, power cord, or unit is damaged, stop using it immediately and contact the manufacturer or an authorized service center. Do not attempt self-repair.
- Do not let the power cord hang over the edge of a counter — children may pull it, causing tipping or injury.
- Never touch the product's electrical components with wet hands or bare feet.
- The power supply connected to this product must have a residual-current device (RCD/GFCI).
- The outlet must comply with local regulations. Safety regulations require mandatory grounding of this product.
- Before cleaning, maintenance, or replacing parts, always disconnect the power supply.
- Never insert screwdrivers or other objects into the ventilation openings.
- Only authorized technicians may disassemble, inspect, or repair this product.
- In case of fire, do not use water — use a CO_2 fire extinguisher.
- Do not use mechanical means or any method other than those recommended by the manufacturer to accelerate defrosting.
- Do not damage the refrigerant circuit.
- Warning: Flammable materials — risk of fire.
- Refrigerant waste must be disposed of at an authorized waste processing center. Keep away from open flames.
- Do not store aerosol cans or other explosive substances containing flammable propellants inside this product.
- Keep all ventilation openings clear. Keep the product away from heat sources or steam-generating appliances.

CAUTION

- Keep the product upright during transport. Tilting may cause damage.
- After transport, let the product stand for 4 hours to allow the refrigerant to stabilize before powering on.
- Wear gloves when servicing the motor or internal refrigeration system.
- Do not block the ventilation openings to ensure proper operation.
- Do not place non-food items inside the product chamber.
- This product is for indoor use only.
- This product is designed to make ice from drinking water. Do not use it for any other purpose.

NOTICE

- Product noise level is below 50 dB(A).
- This product's climate class is SN, suitable for ambient temperatures of 10°C–32°C / 50°F–89.6°F.

BEFORE USE

PLACEMENT REQUIREMENTS

— Place the product on a sturdy, flat, dry countertop.
— Ensure at least 120 mm (4.7") ventilation clearance on all sides.
— Keep away from heat sources (ovens, stovetops, etc.) and direct sunlight.

WATER QUALITY

— Use drinking water for ice making. The purer the water, the clearer the ice.
— For optimal clarity, use water with low mineral content (TDS < 200 mg/L).
— Suitable sources: purified water, RO-filtered water, deeply filtered water, low-TDS mineral water.
— **Do NOT** use colored, flavored, carbonated, or gas-saturated beverages (tea, juice, coffee, milk, soda, etc.) — these may contaminate or damage the product.

FIRST USE

— Remove all packaging materials after unboxing.
— Wipe the interior with a damp cloth, then dry thoroughly.
— Run the cleaning cycle once before first use (see CH.07).
— The first 5 ice-making cycles are a cool-down phase — ice size will gradually increase as water temperature drops. This is normal.

PRODUCT STRUCTURE

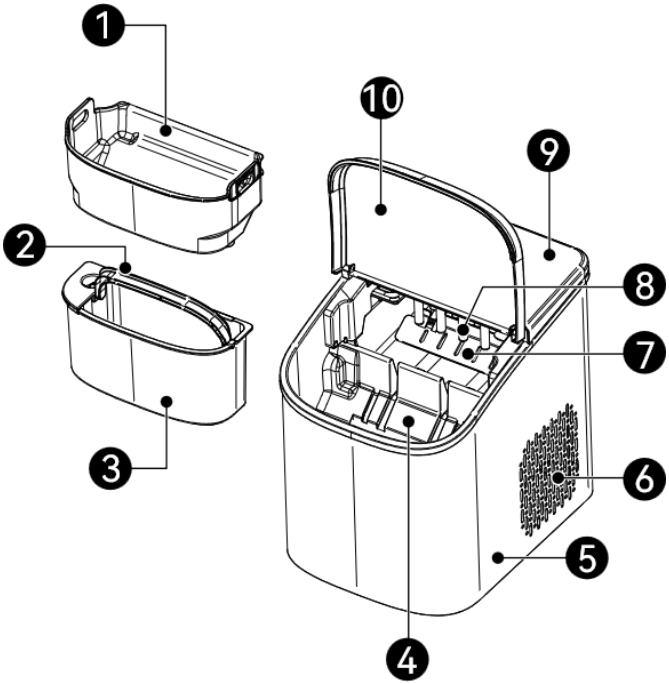

NO.	NAME	NO.	NAME
1	Lid	5	Water Tank Handle
2	Ice Basket	6	Control Panel
3	Ice Mold	7	Drain Plug
4	Water Tank		

CONTROL PANEL

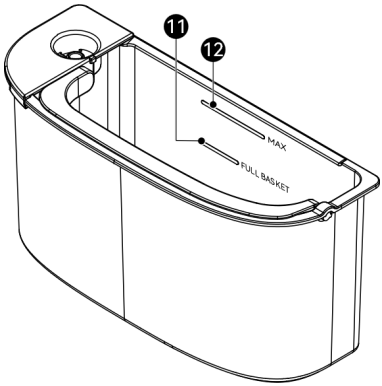

NO. / BUTTON	DESCRIPTION
1 Power Power	Press to turn on; long-press to turn off.
2 Make Ice Make Ice	Cycle through ice sizes (S / M / L); unit starts automatically.
3 Clean Clean	Start the automatic cleaning cycle.
4 ICE FULL ICE FULL	Indicator (green) — ice basket full; unit pauses.
5 ADD WATER ADD WATER	Indicator (red) — water tank low; unit pauses; refill immediately.

SPECIFICATIONS

PARAMETER	SPECIFICATION
Voltage	220~240 Vac
Frequency	50 Hz
Ice-Making Power	110 W
Defrost Power	130 W
Dimensions (W×D×H)	235 × 305 × 321 mm
Net Weight	7 kg / 15.4 lb
Ice Capacity (24h)	6.9~7.4 kg
Drainage	Manual Drain
Ice Size S	Φ19 × 24 mm
Ice Size M	Φ21 × 25 mm
Ice Size L	Φ22 × 27 mm
Ventilation Clearance	≥ 120 mm / 4.7"
Refrigerant	R600a
Water Tank Capacity	MAX 1.0 L / MIN 0.75 L
Ice Cycle	S: 9pcs/8min, M: 9pcs/10min, L: 9pcs/11.5min
Operating Environment	5~32℃, ≤85% RH
Noise Level	≤ 50 dB(A)

OPERATION GUIDE

MAKING ICE

1. Remove the water tank, fill with drinking water up to the water line, and place it back inside the unit.
2. Plug in the power cord. Press the **Power** button — the indicator lights up white and the unit turns on.
3. Press the **Make Ice** button to select an ice size (S / M / L). The unit starts making ice automatically.
4. Wait for the ice to form. Bullet ice will drop into the ice basket automatically.
5. Open the lid, remove the ice basket, and collect the ice. Replace the basket and the unit resumes automatically.

NOTICE

- Press **Make Ice** during operation to switch ice sizes.
- Long-press **Power** to stop ice-making and turn off the unit.
- When the basket is full, the **ICE FULL** indicator lights green and the unit pauses. Remove ice or wait for it to melt — the unit resumes automatically.
- When the tank is low, the **ADD WATER** indicator lights red. Refill promptly.
- You cannot make multiple sizes simultaneously, but you can switch sizes mid-cycle.
- Occasional opacity during continuous ice-making is normal due to water quality, temperature, and ambient conditions.

CLEANING & MAINTENANCE

AUTO-CLEAN (ICE MOLD & TRAY)

1. Fill the water tank to the water line.
2. With the unit powered on, press the **Clean** button. The indicator lights white and the unit cleans automatically.
3. When cleaning is complete, the unit stops automatically and the indicator turns off.

DRAINING

1. Unplug the power cord and place the unit near a sink.
2. Remove the drain plug from the bottom of the unit and let all water drain out.
3. Once drained, replace the drain plug securely.

DAILY MAINTENANCE

- Regularly rinse the interior with clean water — we recommend **cleaning before each daily use**.
- Wipe the exterior with a soft, damp cloth. Do not use abrasive or corrosive cleaners.
- Follow the auto-clean steps to clean the ice mold and tray.

LONG-TERM STORAGE

- Run a cleaning cycle.
- Drain all water from the unit.
- Wipe the interior dry and leave the lid open for natural air-drying.
- Unplug the power cord and store in a dry, ventilated area.

TROUBLESHOOTING

PROBLEM	POSSIBLE CAUSE	SOLUTION
Unit won't turn on	Power not connected or outlet has no power	Check the power connection and ensure the outlet is working.
Won't drain	Drain plug not removed or drain hole blocked	Check that the drain plug at the bottom is removed; check for blockages.
Not making ice	Water tank low (ADD WATER indicator red)	Fill the water tank to the water line.
Not making ice	Mold only frosts, no ice forming (pump issue)	Fill water to the line, let stand for 30 minutes, then restart. Check through the window if water is being pumped to the tray.
Stops mid-cycle	Ice basket full (ICE FULL indicator green)	Remove ice or wait for it to melt. The unit will resume automatically.
Stops mid-cycle	Water tank low (ADD WATER indicator red)	Refill the water tank promptly. The unit will resume automatically.
First 5 batches are small	Water temperature is still high (cool-down phase)	This is normal. Ice size will increase as water temperature drops.
Poor ice quality	Insufficient ventilation or high ambient temperature	Ensure ≥120 mm clearance on all sides; move the unit to a cool, ventilated area.
Ice is not clear	High mineral content in water or temperature effects	Use purified water with TDS < 200 mg/L. Occasional opacity is normal during continuous use.

DISCLAIMER

The manufacturer, distributors, and brand owners shall not be held liable for any damage or quality issues resulting from operations not in accordance with this manual.

BRAND & WARRANTY INFORMATION

Thank you for purchasing the WEVAC Ice Maker. If you have any questions, please contact us at: support@wevactech.com | www.wevactech.com

BRAND INFORMATION

Brand	**WEVAC TECHNOLOGY CO., LIMITED**
Address	FLAT/RM 404A BEVERLEY COMMERCIAL CENTRE, 87-105 CHATHAM ROAD SOUTH, TSIM SHA TSUI, KOWLOON, HONG KONG
Website	www.wevactech.com
Customer Support	support@wevactech.com

AUTHORIZED MANUFACTURER

Manufacturer	**广州亚俊氏真空科技股份有限公司** Guangzhou Argion Electric Appliance Co., Ltd.
Address	No. 1 Qiye Road, Nancun Town, Panyu District, Guangzhou, Guangdong, China
Website	www.argiontechnology.com

WARRANTY INFORMATION

This product comes with a **2-year limited warranty**. Warranty replacement service is available within 2 year(s) from the original date of purchase. To be eligible for warranty replacement, you must:

- Have purchased the product within the past 2 year(s).
- Have the original order number or the email address used at the time of purchase.
- If purchased through a dealer or retail partner, provide a copy of the original receipt.

Send us an email to request warranty service: **support@wevactech.com**

WARRANTY CARD

Customer Name	
Address	
City / State / ZIP	
Phone Number	
Email Address	
Original Purchase Date	
Product Model	
Serial Number (if applicable)	
Retailer Name	