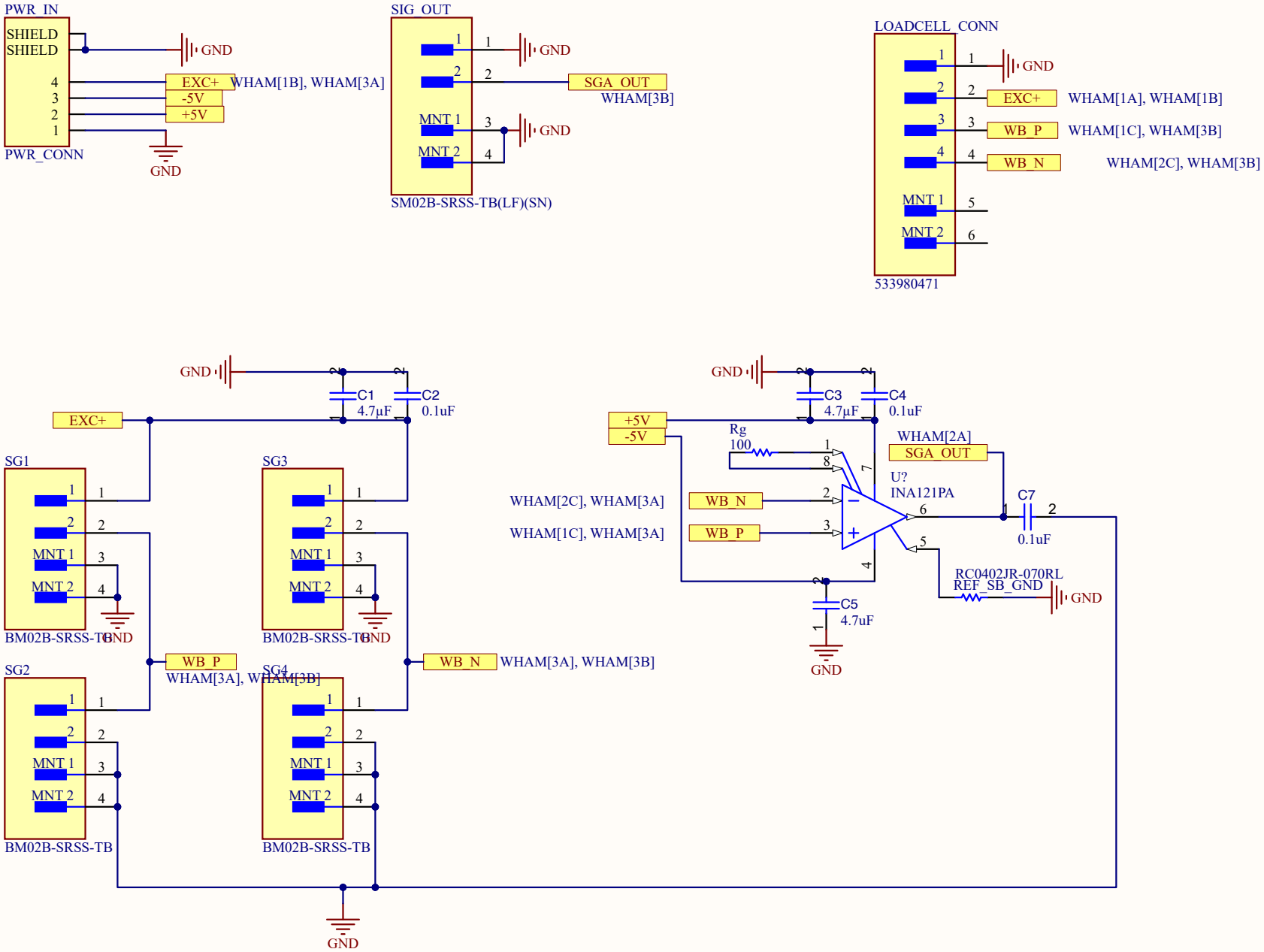

Title	WHeatstone bridge AMplifier (WHAM)	
Size A	Number	Revision
Date: 2/12/2024		Sheet of
File: C:\Users\..\WHAM.SchDoc		Drawn By: