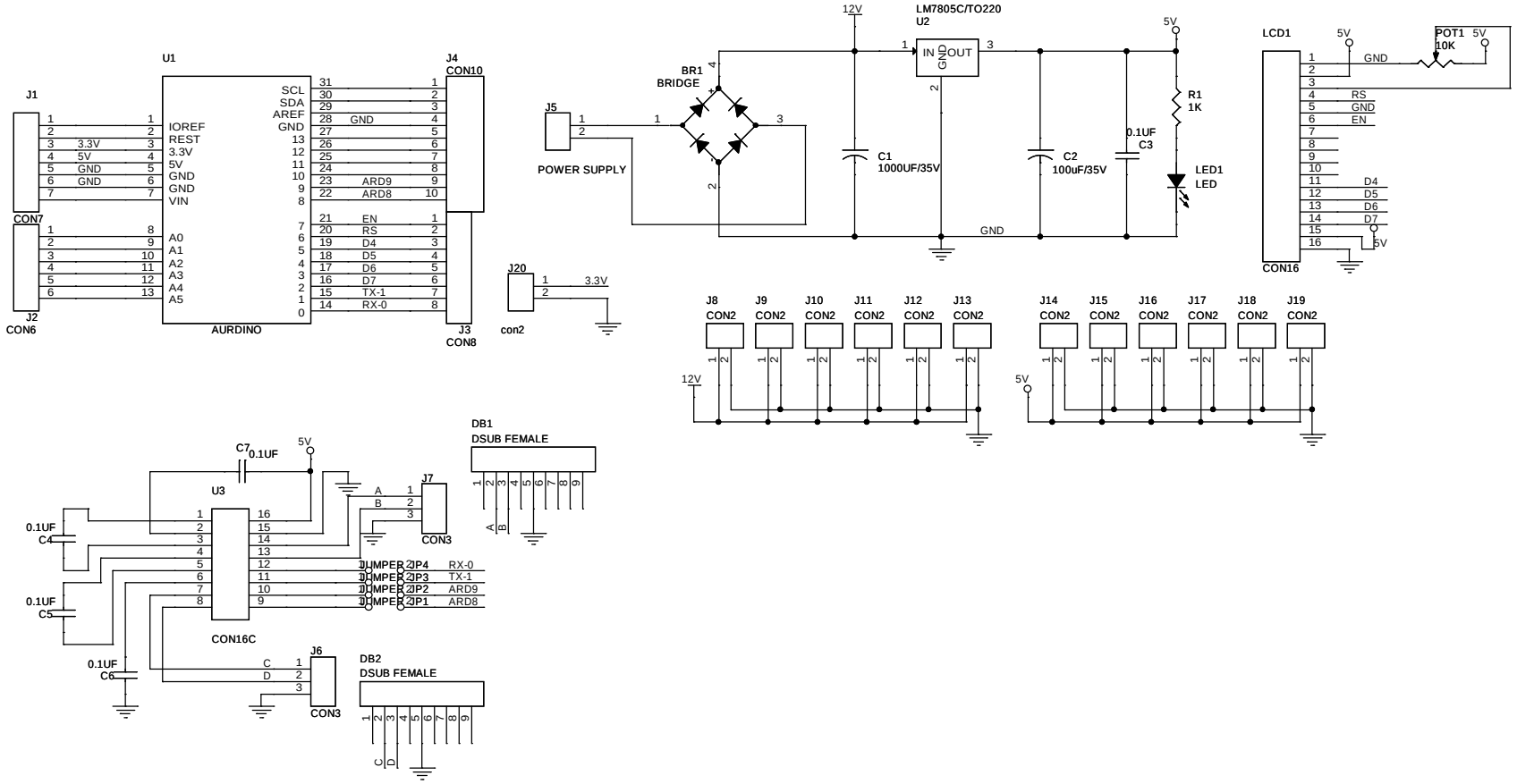

Title	<Title>	
Size B	Document Number <Doc>	Rev <RevCod
Date: Thursday, December 27, 2018	Sheet 1 of 1	