0782 Load Cell

Globally Approved
for Accuracy and Safety

Vehicle Weighing
Use the 0782 load cell in new truck, railroad track and other heavy capacity weighbridge applications or as a replacement for cells in an old weighbridge to enhance its performance. The 0782 is ideally suited to this application.

Tank Weighing
The capacity range from 20t to 300t allows the weighing of big tanks and silos with ease. The stainless steel design (20t–200t), hermetic sealing and IP68 protection provides the best reliability in tank weighing applications.

GAGEMOUNT Module
The optional METTLER TOLEDO GAGEMOUNT (20t–100t) weigh module adds suspension, checking and anti-tiping to your 0782 load cell and includes top and bottom mounting plates to simplify installation. Available in nickel plated mild steel or stainless steel.

0782 High Capacity Load Cell

Every 0782 high capacity load cell features:
- OIML C3 and NTEP IIILM 10.000d approvals (20t–100t)
- ATEX Zone1/2 and 21/22 approvals (20t–100t)
- FM Class I,II,III Div 1 approvals (20t–100t)
- Stainless steel (20t–200t)
- Hermetically sealed design
- IP68 protection class

The 0782 is approved for use in various applications in Europe, Asia, America and almost everywhere else in the world. If an approval is required, the 0782 probably already complies.
The 0782 load cell is even approved for hazardous areas (20t–100t).

METTLER TOLEDO

0782 Load Cell Specifications

Parameter		unit of measure	Specification					
Model No:			0782					
Rated Capacity (R.C.)		t (klb nominal)	20 (44)	30 (66)	50 (110)	100 (220)	200 (441)	300 (661)
Rated Output		mV/V @R.C.	2 ± 0.1%					
Zero load Output		%R.C.	≤ 1					
Combined Error [1) 2)]		%R.C.	≤ 0.018				≤ 0.05	≤ 0.06
Repeatability Error		%A.L. [3)]	≤ 0.01				≤ 0.02	
Creep, 30 minute		%A.L.	≤ 0.0167				≤ 0.03	≤ 0.04
Min. Dead Load Output Return (DR), 30 min		%A.L.	≤ 0.0167				≤ 0.03	≤ 0.04
Temperature Effect on	Min Dead load Output	%R.C./°C (../°F)	≤ 0.002 (0.001)					
	Sensitivity [2)]	%A.L./°C (../°F)	≤ 0.0009 (0.0005)				≤ 0.002 (0.001)	
Temperature Range	Compensated	°C (°F)	–10 ~ +40 (+14 ~ +104)					
	Operating	°C (°F)	–30 ~ +65 (–22 ~ + 150)					
	Safe Storage	°C (°F)	–40 ~ +80 (–40 ~ + 176)					
OIML / European Approval [4)]	OIML Cert. No.		R60/2000-NL-01.04					
	European Cert. No.		NMi TC5844					
	Class		C3					
	n_{max}		3000					
	Y		6666					
	P_{LC}		0.7					
	Humidity Symbol		none					
	Min. dead load	kg (lb)	0 (0)					
	Z		3000					
NTEP Approval [4)]	Number		01-004					
	Class		III L M					
	n_{max}		10000					
	V_{min}	kg (lb)	1.4 (3.0)	2.1 (4.5)	3.5 (7.5)	7.0 (15.0)		
	Min. dead load	kg (lb)	50 (100)					
ATEX Approval [4)]	Number, cat. 2		KEMA 02ATEX1249 X				[7)]	
	Number, cat. 3		KEMA 06ATEX0122					
	Rating		II 2 GD EEx ib IIC T4-T6 IP68 T60°C					
			II 3 GD EEx nL IIC T6 T60°C IP68					
			II 3 GD EEx nA II T6 T60°C IP68					
	Entity Parameters		[4)]					
Factory Mutual Approval [4)]	Number, USA		3013511				[7)]	
	Rating		IS/I,II,III/1/ABCDEFG/T4					
	Entity Parameters		Vmax=20V, Imax=600mA, Pi=1.25W, Ci=9nF, Li=65µH					
	System Drawing No, USA		142730					
Excitation Voltage	Recommended	V AC/DC	5~15					
	Maximum	V AC/DC	20					
Terminal Resistance	Excitation	Ω	1160 ± 10				1160 ± 15	
	Output	Ω	1000 ± 3					
Insulation Resistance @50VDC		MΩ	> 5000					
Breakdown Voltage		V AC	> 500					
Material	Spring Element		stainless steel					4340
	Enclosure		stainless steel					
	Cable entry fitting		stainless steel					
	Cable		PVC					
Protection	Type		welded					
	IP Rating		IP 68					
	NEMA Rating		NEMA 6/6P					
Load Limit	Safe	%R.C.	125					
	Ultimate	%R.C.	300					
Safe Dynamic Load		%R.C.	70					
Fatigue Life		cycles @R.C.	>1,000,000					
Direction of Loading			compression					
Restoring Force [5)]		%A.L./mm (../in) [3)]	0.8 (19)		2 (52)		1.6 (40)	2.5 (63)
Max Horizontal Travel [6)]		± mm (in)	4 (0.16)			5 (0.20)	6 (0.24)	
Deflection @ R.C., nominal		mm (in)	0.25 (0.010)				0.32 (0.013)	0.42 (0.017)
Weight, nominal		kg (lb)	2.8 (6.2)	3 (6.6)	3.3 (7.3)	4.5 (9.9)	12.5 (27.6)	21.7 (48)
Cable	Length	m (ft)	13 (42.5)				20 (66)	30 (98)
	Diameter	mm (in)	5.8 (0.23)					
Barometric Pressure Effect on Zero Load Output		kg/kPa (lb/in.Hg)	3 +(6.6)	4.5 (9.9)	7.5 (16.5)	15 (33)	30 (66)	45 (99)
Drawing No.	Dimensions		12202672					12203541
	To-Scale		12202671					

1) Error due to the combined effect of non-linearity and hysteresis
2) Typical values only. The sum of errors due to Combined Error and Temperature Effect on Sensitivity comply with the requirements of OIML R60 and NIST HB44
3) A.L. = Applied Load
4) See certificate for complete information
5) % of Applied Load (A.L.) per mm (in) displacement of the top button relative to the bottom button
6) Maximum horizontal displacement of the top button relative to the bottom button
7) In process, consult factory

©09/2009

0782 Load Cell Dimensional Drawings mm [inch]

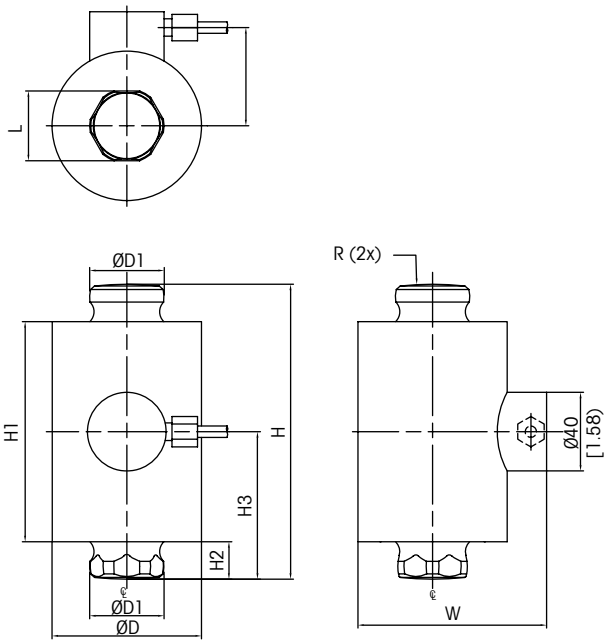

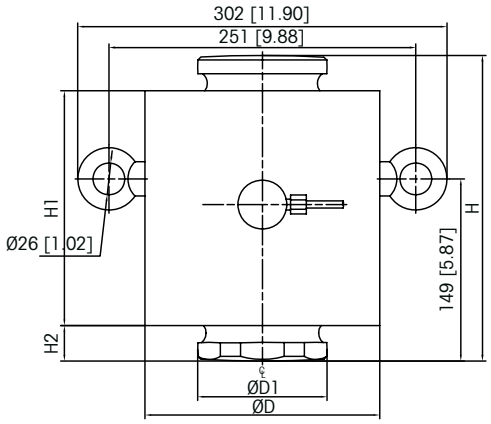

300t only

Capacity	Dimensions and Locations									
	D	D1	H	H1	H2	H3	L	L1	R	W
20–30t [33–66 klb]	76 [2.99]	37.8 [1.49]	150 [5.91]	112 [4.41]	19 [0.75]	75 [2.95]	33.5 [1.40]	50 [1.97]	160 [6.30]	96 [3.78]
50t [110 klb]	76 [2.99]	37.8 [1.49]	150 [[5.91]	112 [4.41]	19 [0.75]	75 [2.95]	35.5 [1.40]	50 [1.97]	305 [12.0]	96 [3.78]
100t [220 klb]	102 [4.02]	53.8 [2.12]	150 [5.91]	112 [4.41]	19 [0.75]	75 [2.95]	50.6 [1.99]	64 [2.52]	305 [12.0]	123 [4.84]
200t [440 klb]	158 [6.22]	80 [3.15]	195 [7.68]	145 [5.71]	25 [0.98]	93 [3.66]	75.25 [2.96]	93 [3.66]	400 [5.75]	180 [7.09]
300t [660 klb]	192 [7.56]	106 [4.17]	250 [9.84]	192 [7.56]	29 [1.14]	128 [5.04]	99.20 [3.91]	110 [4.33]	900 [35.4]	213 [8.39]

0782 Load Cell Receivers mm [inch] 20t–50t

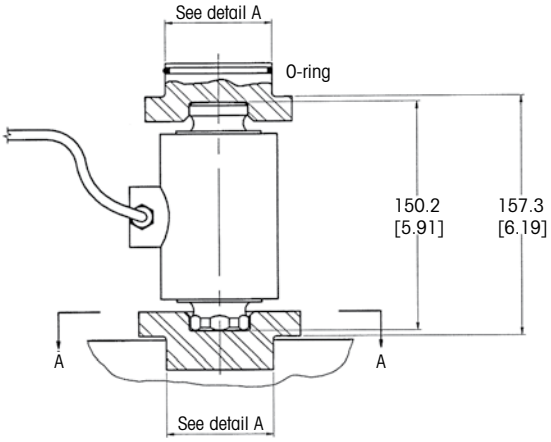

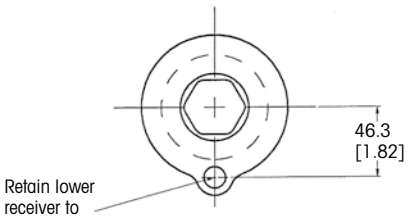

Retain lower receiver to lower mounting plate with .500 DIA roll pin or equivalent

Section A–A
only item 2

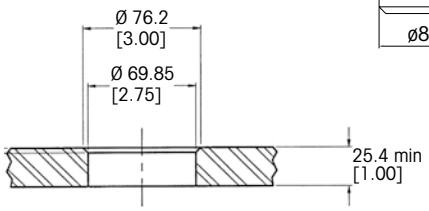

Detail A
Receiver mounting plate top & bottom

0782 Load Cell Receivers mm [inch] 100t

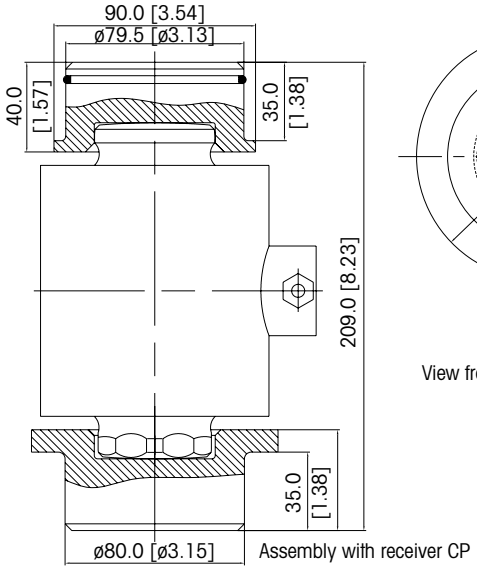

Assembly with receiver CP

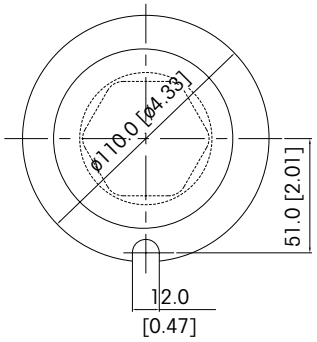

View from the assembly bottom

0782 Load Cell Order Information

Description	Item No.
Load Cell 0782 – 20t	**71201708**
Load Cell 0782 – 30t	**71201709**
Load Cell 0782 – 50t	**71201710**
Load Cell 0782 – 100t	**71201711**
Load Cell 0782 – 200t	**71210093**
Load Cell 0782 – 300t	**71210169**
Upper Receiver – up to 50t	**61039191**
Lower Receiver – up to 50t	**61039190**
0782 Bottom Gasket	**68000443**
Receiver Kit SS 0782 – 100t	**72209873**

Bolded entries are stocked

0782 Load Cell Cable Colours

Colour	Function
Green	+ Excitation
Black	– Excitation
White	+ Signal
Red	– Signal
Yellow	+ Sense
Blue	– Sense
Yellow (long)	Shield

Full Connectivity

Our sensors and instruments are professional communicators. METTLER TOLEDO supplies you with various data communication interfaces that allow you to communicate with your PLCs, MES or ERP systems.

Global Approvals

The 0782 is provided with all listed approvals. No need to think about options and additional charges. Simplifies the conduct of global business, order processing and service-part stocking.

ServiceXXL® Tailored Services

Worldwide Services

Use METTLER TOLEDO service including fast parts availability from our local supply or one of our logistics centers in Europe, Asia and America. Trained technicians can assist in professional service, installation and approval worldwide.

Weighing Electronics

METTLER TOLEDO offers a complete family of electronics from simple weighing to application solutions for filling, stock control, batching, formulation, counting, checkweighing.

Quality certificate ISO9001
Environment certificate ISO14001

www.mt.com

Visit for more information

Subject to technical changes.
©09/2009 Mettler-Toledo AG
Printed in Switzerland MTSI 44099801
MarCom Industrial