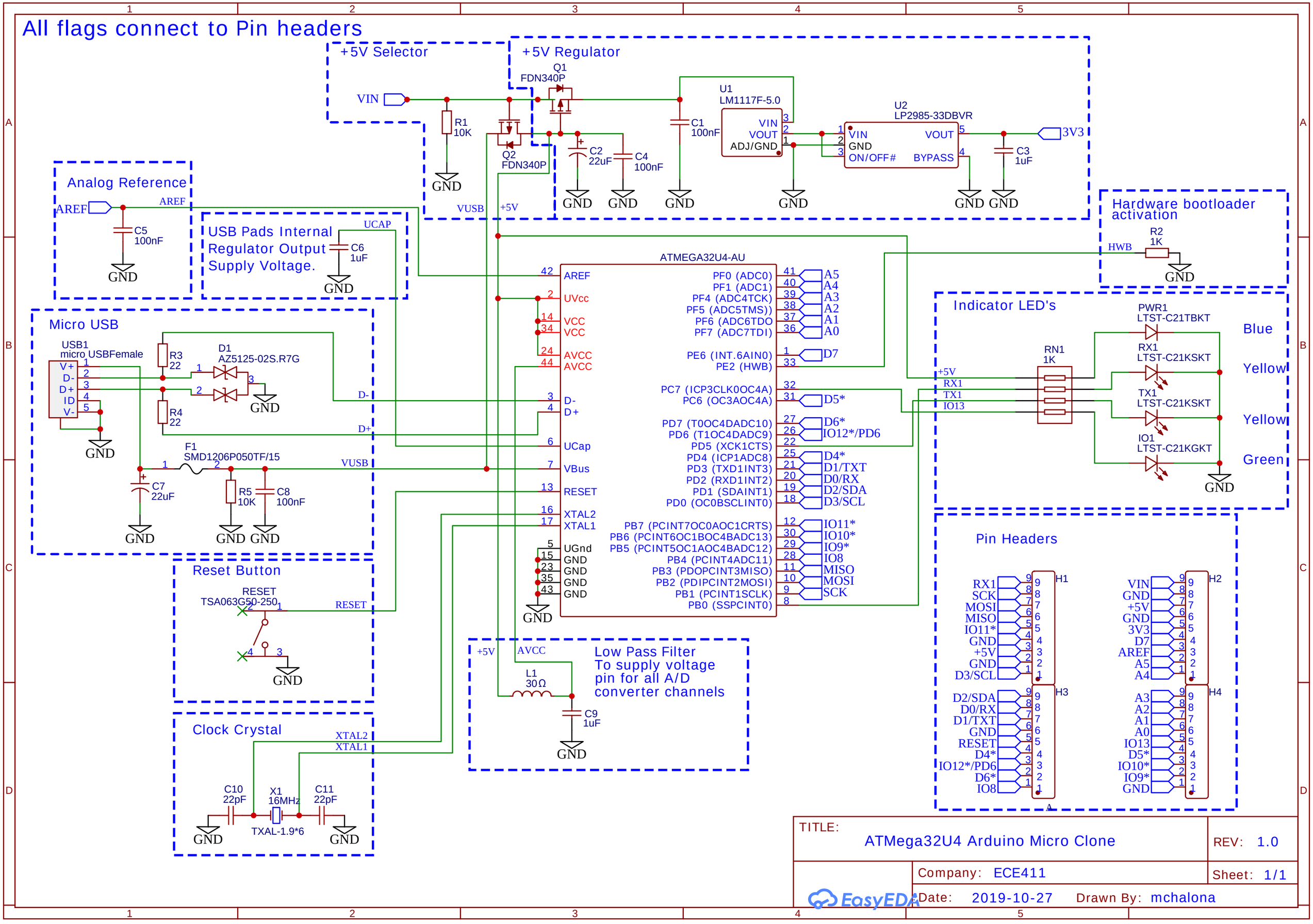
All flags connect to Pin headers
+5V Selector
VIN
R1
10K
Q1
FDN340P
Q2
FDN340P
VUSB
+5V
+5V Regulator
C2
22uF
C4
100nF
C1
100nF
U1
LM1117F-5.0
VIN
VOUT
ADJ/GND
U2
LP2985-33DBVR
VIN
GND
ON/OFF#
VOUT
BYPASS
C3
1uF
3V3
GND
Analog Reference
AREF
C5
100nF
USB Pads Internal
Regulator Output
Supply Voltage.
UCAP
C6
1uF
Hardware bootloader
activation
HWB
R2
1K
ATMEGA32U4-AU
AREF
UVcc
VCC
VCC
AVCC
AVCC
D-
D+
UCap
VBus
RESET
XTAL2
XTAL1
UGnd
GND
GND
GND
GND
PF0 (ADC0)
PF1 (ADC1)
PF4 (ADC4TCK)
PF5 (ADC5TMS))
PF6 (ADC6TDO
PF7 (ADC7TDI)
PE6 (INT.6AIN0)
PE2 (HWB)
PC7 (ICP3CLK0OC4A)
PC6 (OC3AOC4A)
PD7 (T0OC4DADC10)
PD6 (T1OC4DADC9)
PD5 (XCK1CTS)
PD4 (ICP1ADC8)
PD3 (TXD1INT3)
PD2 (RXD1INT2)
PD1 (SDAINT1)
PD0 (OC0BSCLINT0)
PB7 (PCINT7OC0AOC1CRTS)
PB6 (PCINT6OC1BOC4BADC13)
PB5 (PCINT5OC1AOC4BADC12)
PB4 (PCINT4ADC11)
PB3 (PDOPCINT3MISO)
PB2 (PDIPCINT2MOSI)
PB1 (PCINT1SCLK)
PB0 (SSPCINT0)
A5
A4
A3
A2
A1
A0
D7
D5*
D6*
IO12*/PD6
D4*
D1/TXT
D0/RX
D2/SDA
D3/SCL
IO11*
IO10*
IO9*
IO8
MISO
MOSI
SCK
Micro USB
USB1
micro USBFemale
V+
D-
D+
ID
V-
R3
22
R4
22
D1
AZ5125-02S.R7G
F1
SMD1206P050TF/15
C7
22uF
R5
10K
C8
100nF
Indicator LED's
PWR1
LTST-C21TBKT
RX1
LTST-C21KSKT
TX1
LTST-C21KSKT
IO1
LTST-C21KGKT
RN1
1K
+5V
RX1
TX1
IO13
Blue
Yellow
Yellow
Green
Reset Button
RESET
TSA063G50-250
Clock Crystal
XTAL2
XTAL1
C10
22pF
X1
16MHz
C11
22pF
TXAL-1.9*6
Low Pass Filter
To supply voltage
pin for all A/D
converter channels
AVCC
L1
30Ω
C9
1uF
Pin Headers
H1
RX1
SCK
MOSI
MISO
IO11*
GND
+5V
GND
D3/SCL
H2
VIN
GND
+5V
GND
3V3
D7
AREF
A5
A4
H3
D2/SDA
D0/RX
D1/TXT
GND
RESET
D4*
IO12*/PD6
D6*
IO8
H4
A3
A2
A1
A0
IO13
D5*
IO10*
IO9*
GND
TITLE:
ATMega32U4 Arduino Micro Clone
REV: 1.0
Company: ECE411
Sheet: 1/1
Date: 2019-10-27
Drawn By: mchalona
EasyEDA