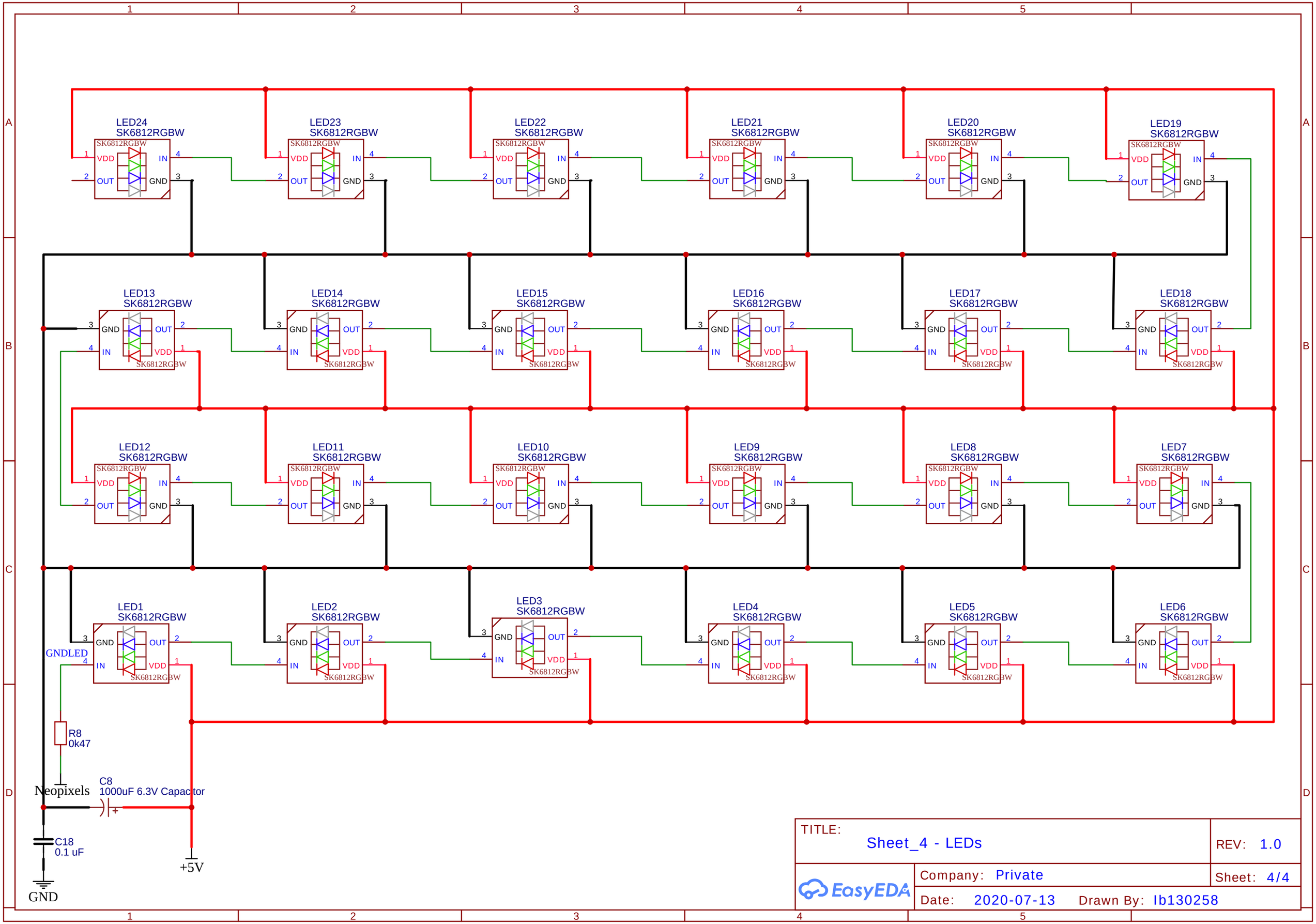
LED24
SK6812RGBW
LED23
SK6812RGBW
LED22
SK6812RGBW
LED21
SK6812RGBW
LED20
SK6812RGBW
LED19
SK6812RGBW
LED13
SK6812RGBW
LED14
SK6812RGBW
LED15
SK6812RGBW
LED16
SK6812RGBW
LED17
SK6812RGBW
LED18
SK6812RGBW
LED12
SK6812RGBW
LED11
SK6812RGBW
LED10
SK6812RGBW
LED9
SK6812RGBW
LED8
SK6812RGBW
LED7
SK6812RGBW
LED1
SK6812RGBW
LED2
SK6812RGBW
LED3
SK6812RGBW
LED4
SK6812RGBW
LED5
SK6812RGBW
LED6
SK6812RGBW
VDD
OUT
IN
GND
GNDLED
R8
0k47
Neopixels
C8
1000uF 6.3V Capacitor
C18
0.1 uF
+5V
GND
TITLE:
Sheet_4 - LEDs
REV: 1.0
Company: Private
Sheet: 4/4
Date: 2020-07-13
Drawn By: Ib130258
EasyEDA