دانشگاه صنعتی امیرکبیر
(پلی تکنیک تهران)

Electrical and Electronic Circuits

chapter 7. RLC Circuits

Afarghadan@aut.ac.ir

عظیم فرقدان

مهر ۱۴۰۳

Objectives of the Lecture

- Application of RL and RC circuits
- Second order circuits: RLC
  - Parallel RLC circuit without source
  - Series RLC circuit without source
  - Complete response in the presence of source and initial conditions
  - How to calculate initial conditions

The Rl and RC Circuit

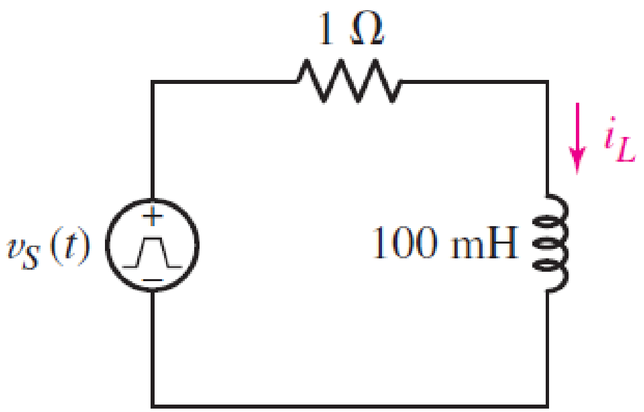

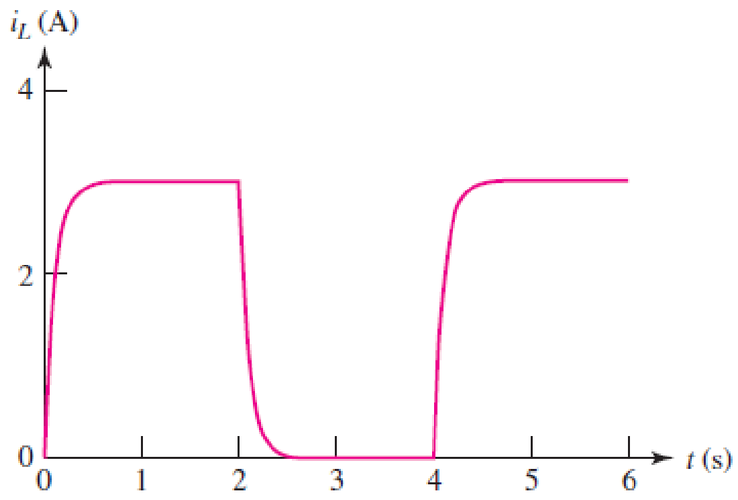

$$i_L(t) = \frac{V_0}{R}\left(1 - e^{-Rt/L}\right)u(t)$$

Application in delay analysis of integrated circuits

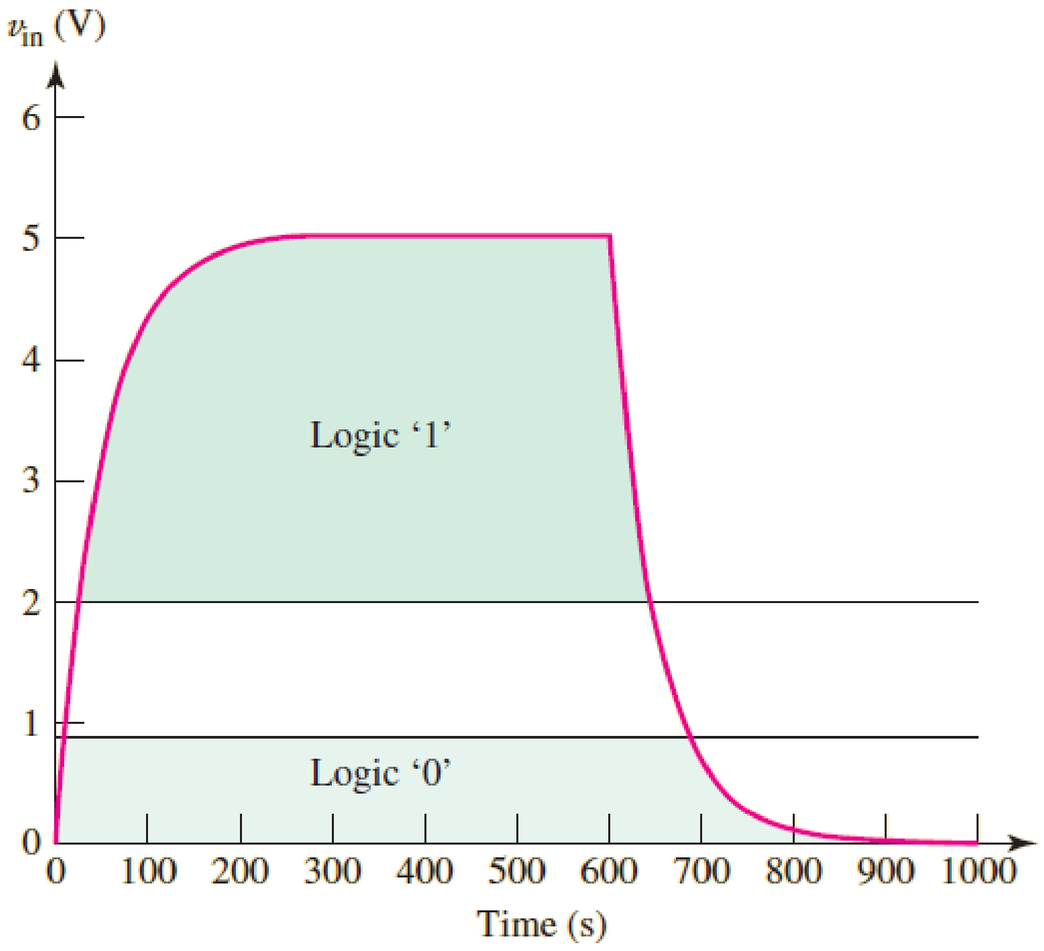

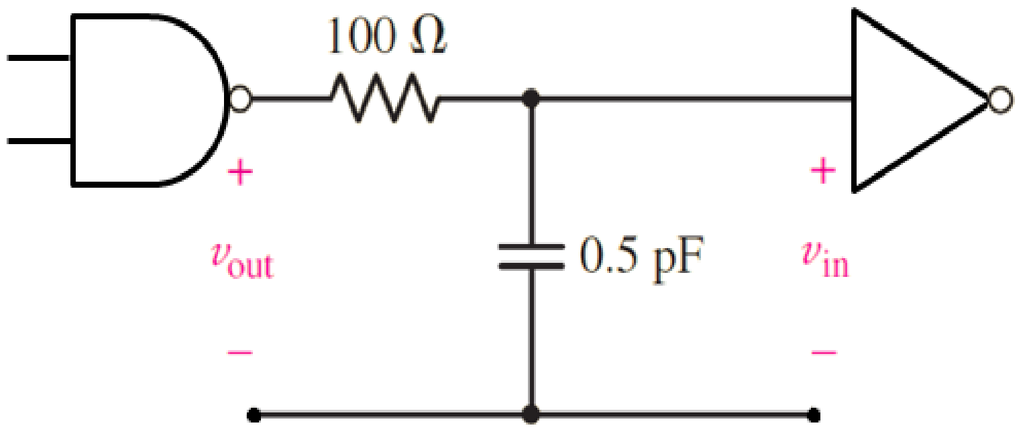

- The parasitic resistance and capacitor of the wire connecting two logic gates increases the delay.
- Maximum allowed frequency:

$$f_{max} = \frac{1}{2 \times 5\tau} = 2Ghz$$

Application as a frequency filter

- A low-pass filter

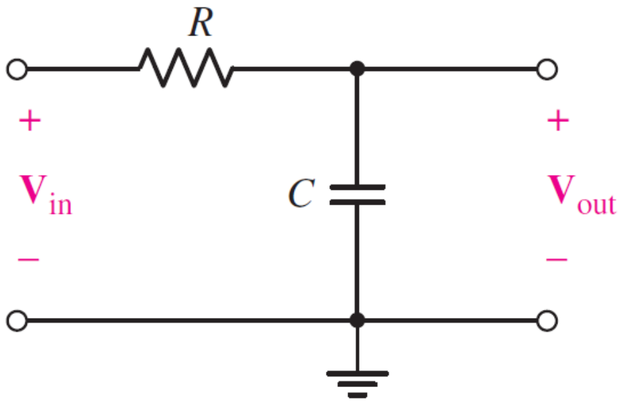

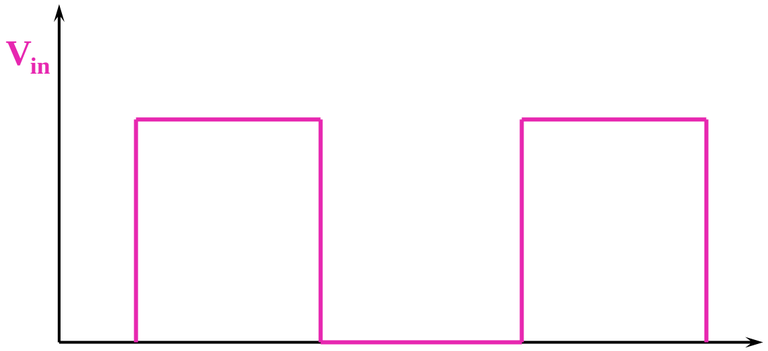

Low frequency

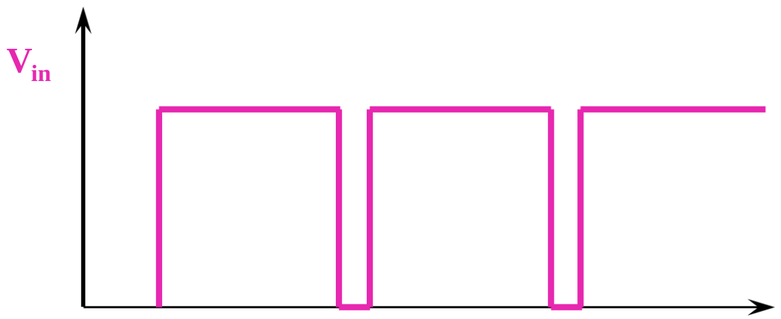

High frequency

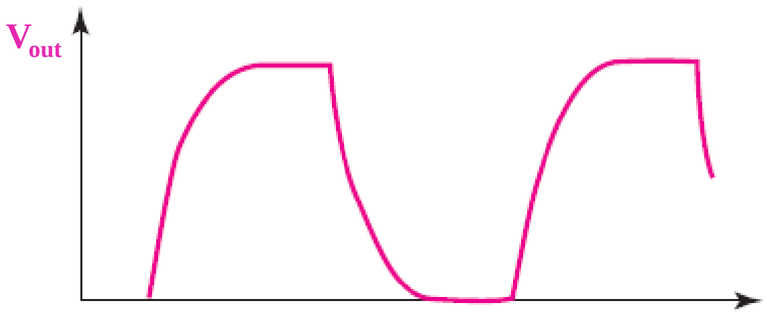

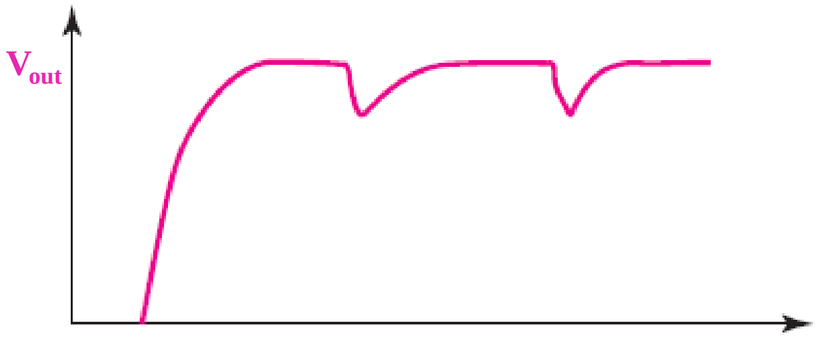

Application as a frequency filter: noise removal

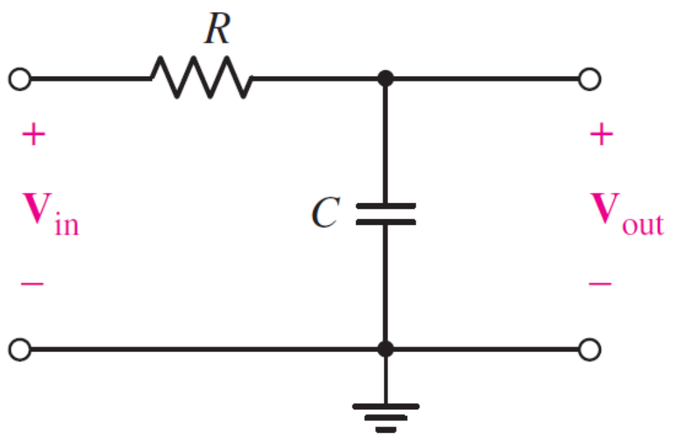

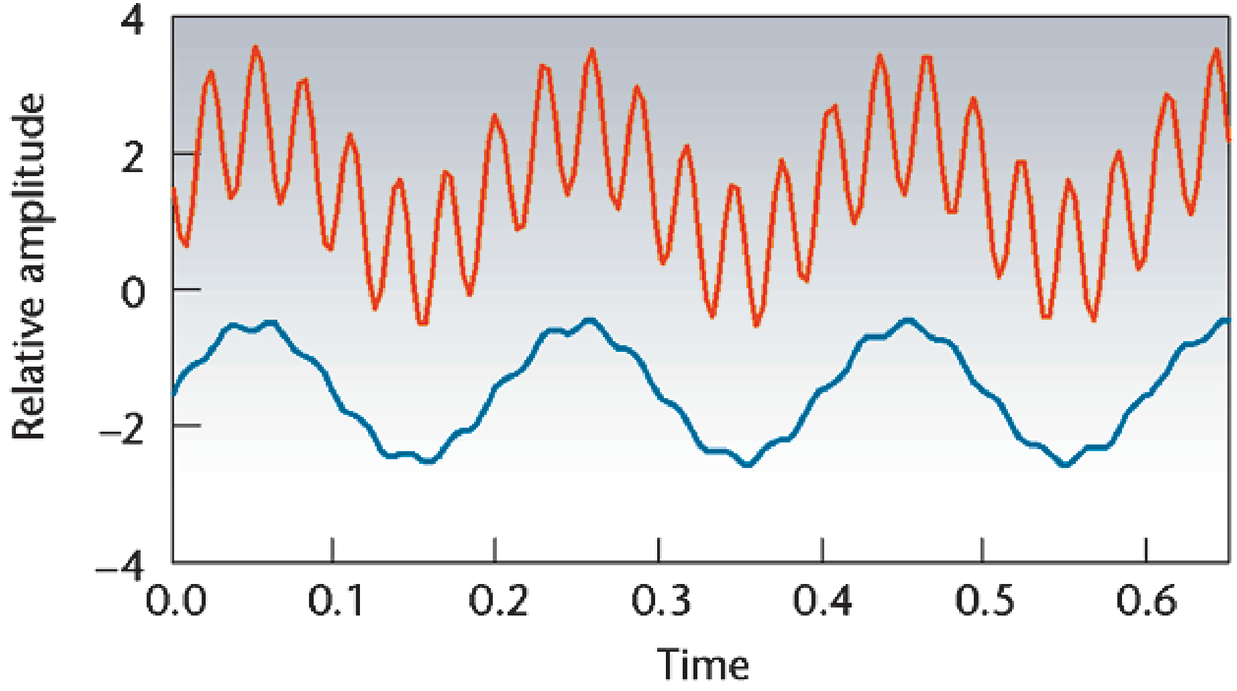

The RLC circuit

- An RLC circuit has both an inductor and a capacitor.
- If it has only one inductor and one capacitor, the circuit will be second order.
- Of course, a second-order circuit can be made with two capacitors or two inductors.
- RLC circuits have many different applications:
- Oscillator: A circuit that produces an alternating pulse (to make a clock)
- Frequency filter: For example, to remove noise
- Analog radio receiver and...
- It is also possible to model the behaviour of car suspension system, elevator, airplane, temperature controller, etc. using an RLC circuit.

The Source-Free RLC Parallel Circuit

Applying KCL differentiate to show:

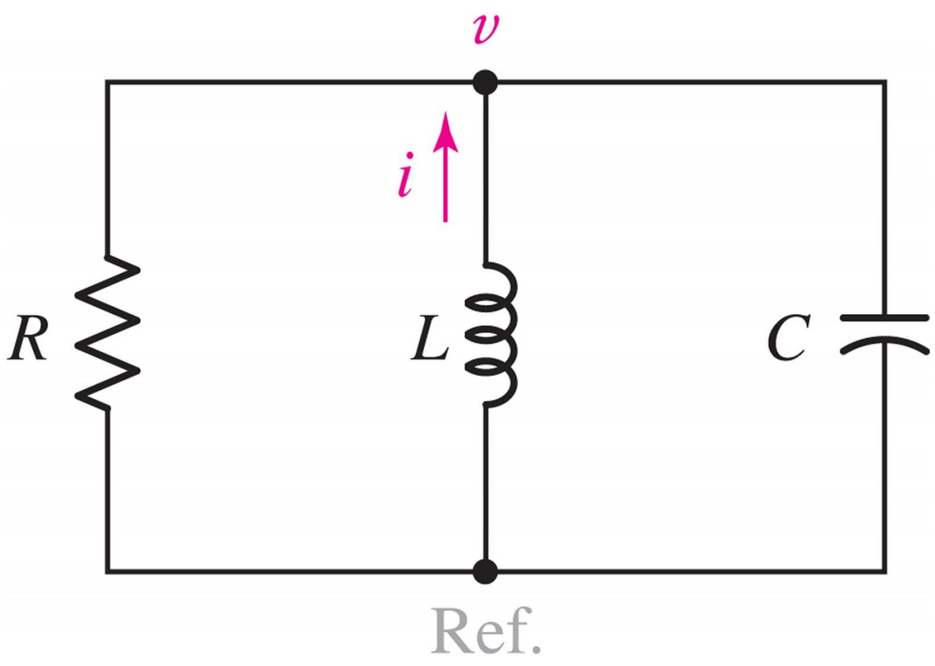

$$C\frac{d^2v}{dt^2}+\frac{1}{R}\frac{dv}{dt}+\frac{1}{L}v=0$$

Solving the Differential Equation

To solve, assume $v = Ae^{st}$.

The solution must then satisfy:

$$Cs^2 + \frac{1}{R}s + \frac{1}{L} = 0$$

which is called the *characteristic equation*.

If s_1 and s_2 are the solutions, then the natural response is

$$v(t) = A_1 e^{s_1 t} + A_2 e^{s_2 t}$$

Exploring the Solution

The solutions to the characteristic equation are:

$$s_1, s_2 = -\frac{1}{2RC} \pm \sqrt{\left(\frac{1}{2RC}\right)^2 - \frac{1}{LC}}$$

Define ω_0 *the resonant frequency*:

$$\omega_0 = 1/\sqrt{LC}$$

and α *the damping coefficient*:

$$\alpha = \frac{1}{2RC}$$

Exploring the Solution

With these definitions, the solutions can be expressed as:

$$s_1 = -\alpha + \sqrt{\alpha^2 - \omega_0^2}$$

$$s_2 = -\alpha - \sqrt{\alpha^2 - \omega_0^2}$$

The constants A_1 and A_2 are determined by the initial conditions.

Types of Responses

- If $\alpha > \omega_0$ the solutions are real, unequal and the response is termed ***overdamped***.
  - The response does not have an oscillatory state. Like dropping a pendulum in a container of grease, or dropping a very stiff spring.
- If $\alpha = \omega_0$ the solutions are real and equal and the response is termed ***critically damped***.
  - The circuit is on the verge of oscillating, but it is not yet oscillating.
- If $\alpha < \omega_0$ the solutions are complex conjugates and the response is termed ***underdamped.***
  - The response of the circuit is in the form of oscillatory damping. Like dropping a pendulum

Overdamped Parallel RLC ($\alpha > \omega_0$)

Both roots are real and distinct.

$$s_1 = -\alpha + \sqrt{\alpha^2 - \omega_0^2}$$

$$s_2 = -\alpha - \sqrt{\alpha^2 - \omega_0^2}$$

The normal response form is as follows.

$$v(t) = A_1 e^{s_1 t} + A_2 e^{s_2 t}$$

Overdamped Parallel RLC

Show that $v(t) = 84(e^{-t} - e^{-6t})$ when $i(0^+)=10$ A and $v(0^+)=0$ V.

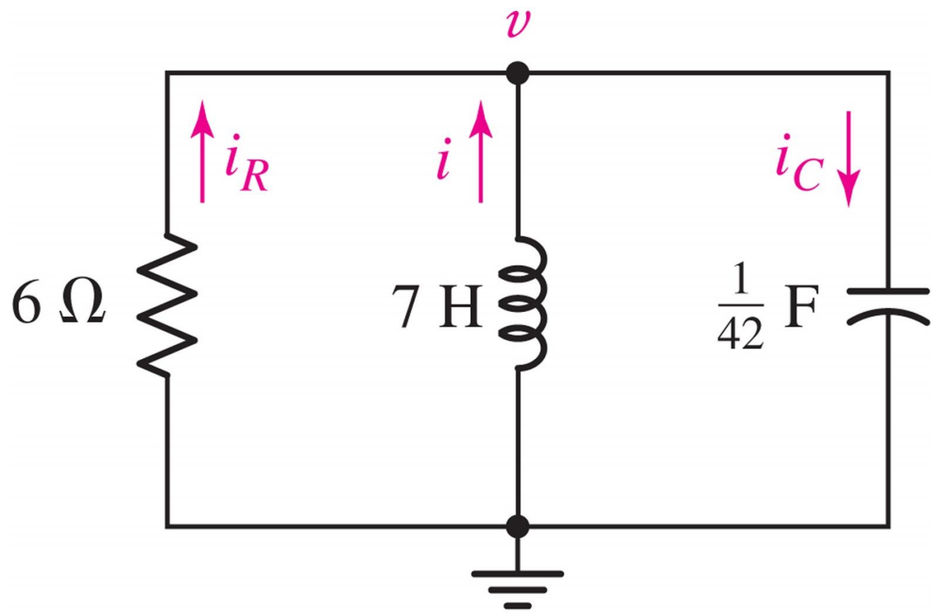

Graphing the Response

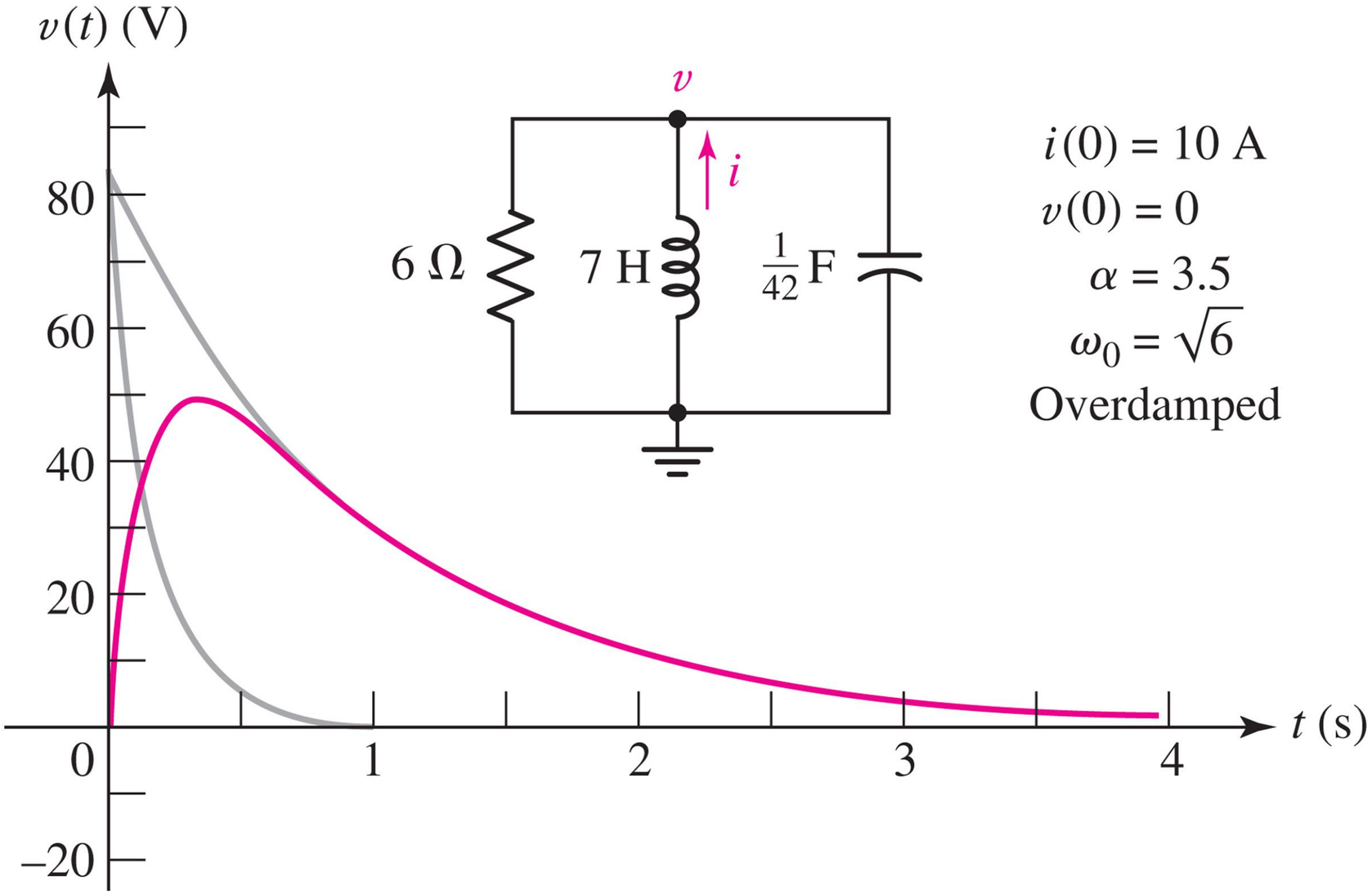

$i(0) = 10$ A

$v(0) = 0$

$\alpha = 3.5$

$\omega_0 = \sqrt{6}$

Overdamped

Example 2: overdamped RLC Circuit

Show that $v_C(t) = 80e^{-50{,}000t} - 20e^{-200{,}000t}$ V for t>0.

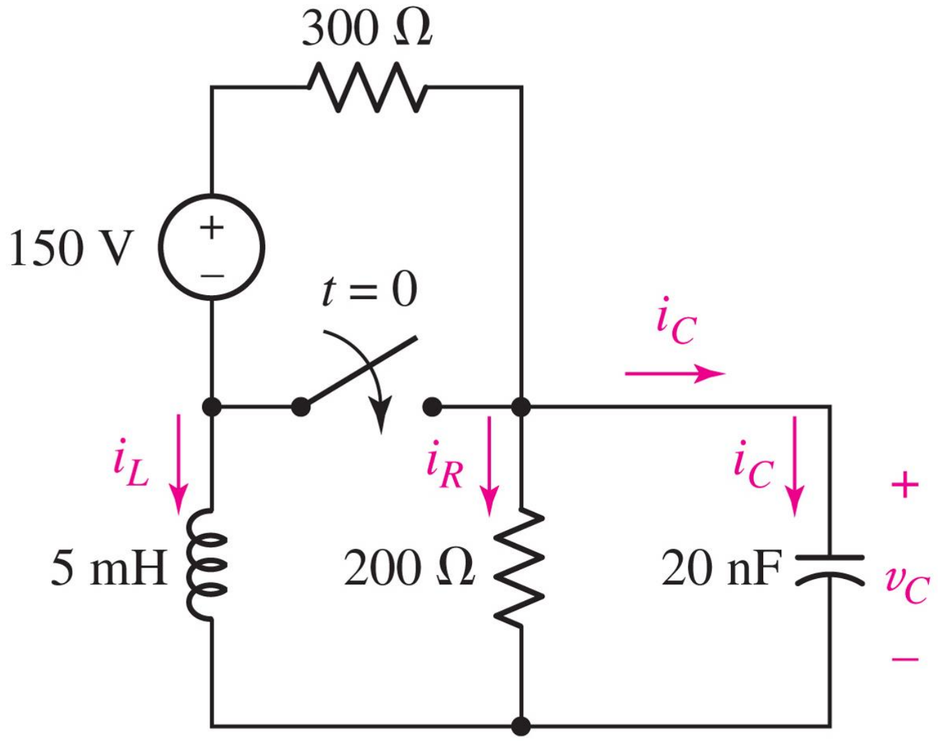

Critical Damping ($\alpha=\omega_0$)

A double real root:

$$s_1 = -\alpha + \sqrt{\alpha^2 - \omega_0^2}$$

$$s_2 = -\alpha - \sqrt{\alpha^2 - \omega_0^2}$$

$$s_1 = s_2 = -\alpha$$

The normal response form is as follows:

$$v(t) = e^{-\alpha t}\left(A_1 t + A_2\right)$$

Critical Damping ($\alpha=\omega_0$)

Find R_1 such that the circuit is critically damped for $t>0$ and R_2 so that $v(0)=2\ V$.

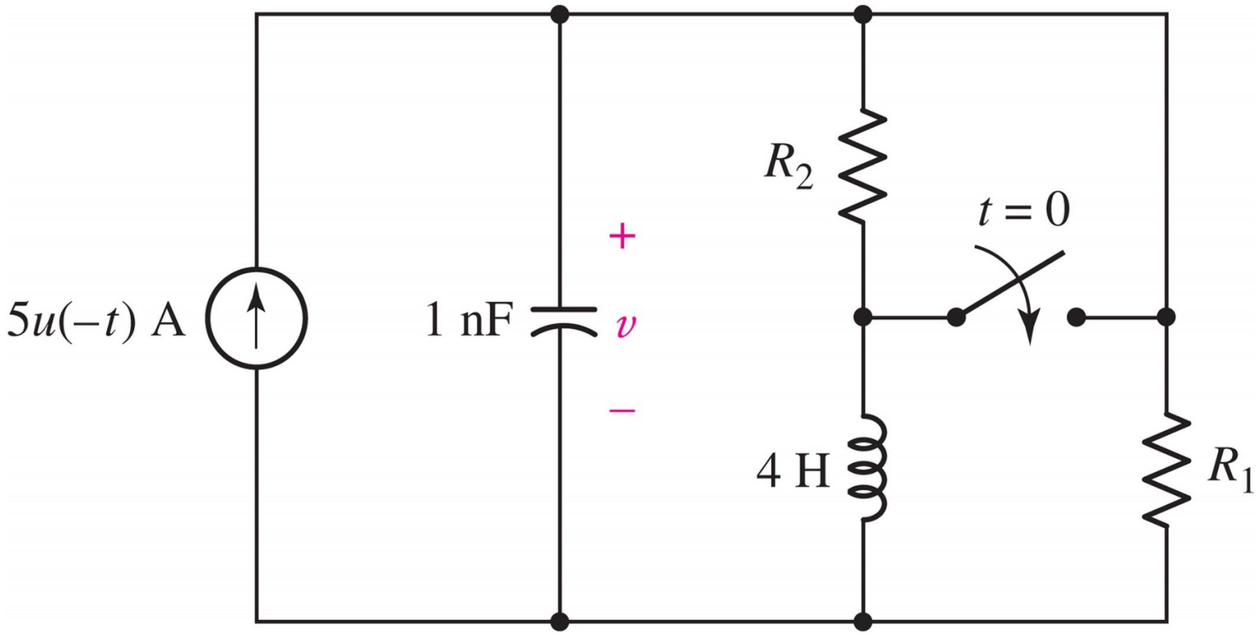

Answer: $R_1 = 31.63\ k\Omega$, $R_2=0.4\Omega$

The Underdamped Response ($\alpha<\omega_0$)

If $\alpha<\omega_0$, define:

$$\omega_d = \sqrt{\omega_0^{\,2} - \alpha^2}$$

$$s_1 = -\alpha + \sqrt{\alpha^2 - \omega_0^2}$$

$$s_2 = -\alpha - \sqrt{\alpha^2 - \omega_0^2}$$

and the solution is

$$v(t) = e^{-\alpha t}\left(A_1 e^{j\omega_d t} + A_2 e^{-\omega_d t}\right)$$

or equivalently

$$v(t) = e^{-\alpha t}\left(B_1 \cos(\omega_d t) + B_2 \sin(\omega_d t)\right)$$

Example: Underdamped Response

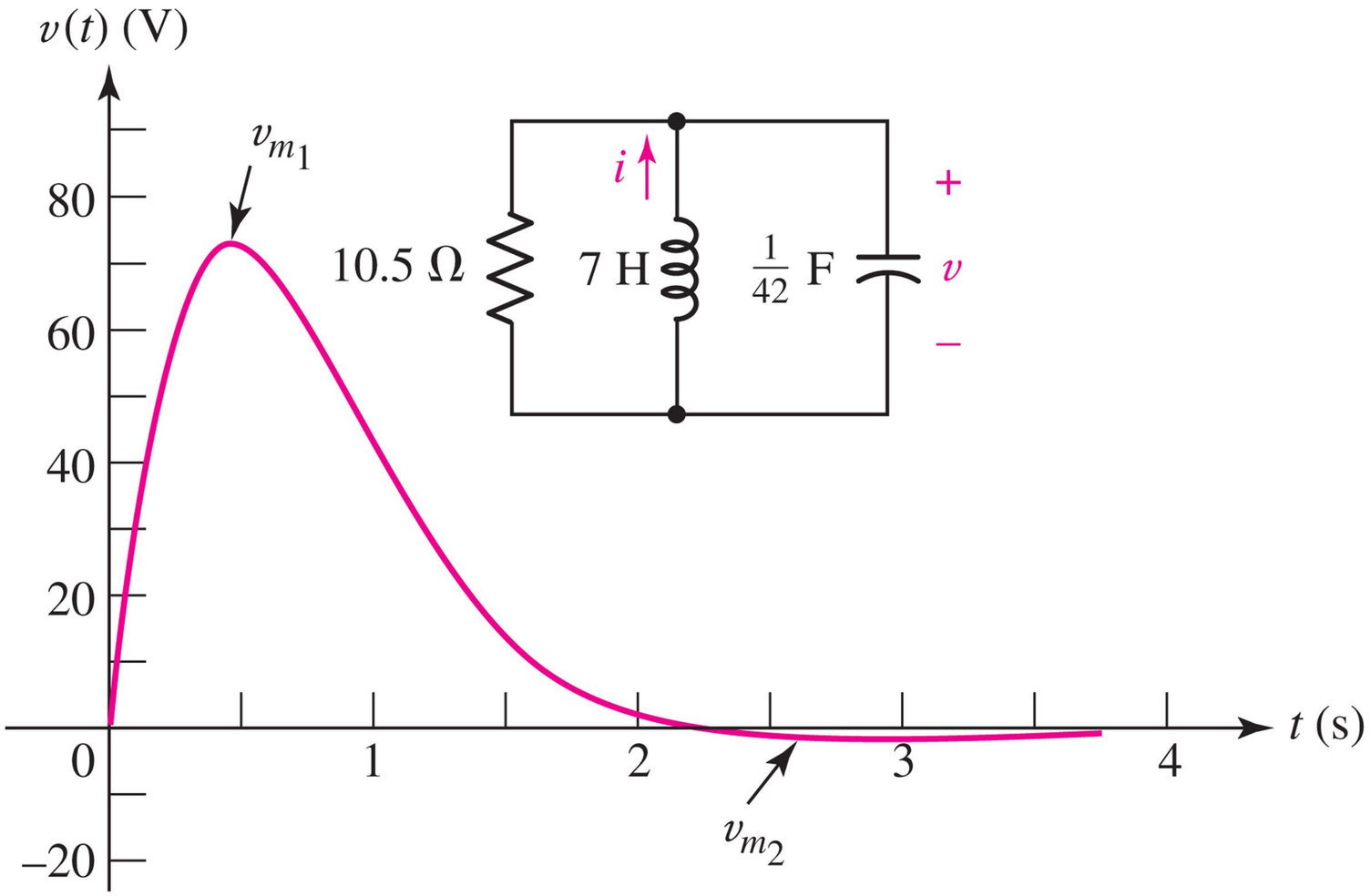

$$v(t) = 210\sqrt{2}e^{-2t}\sin\sqrt{2}t$$

Comparing the Responses

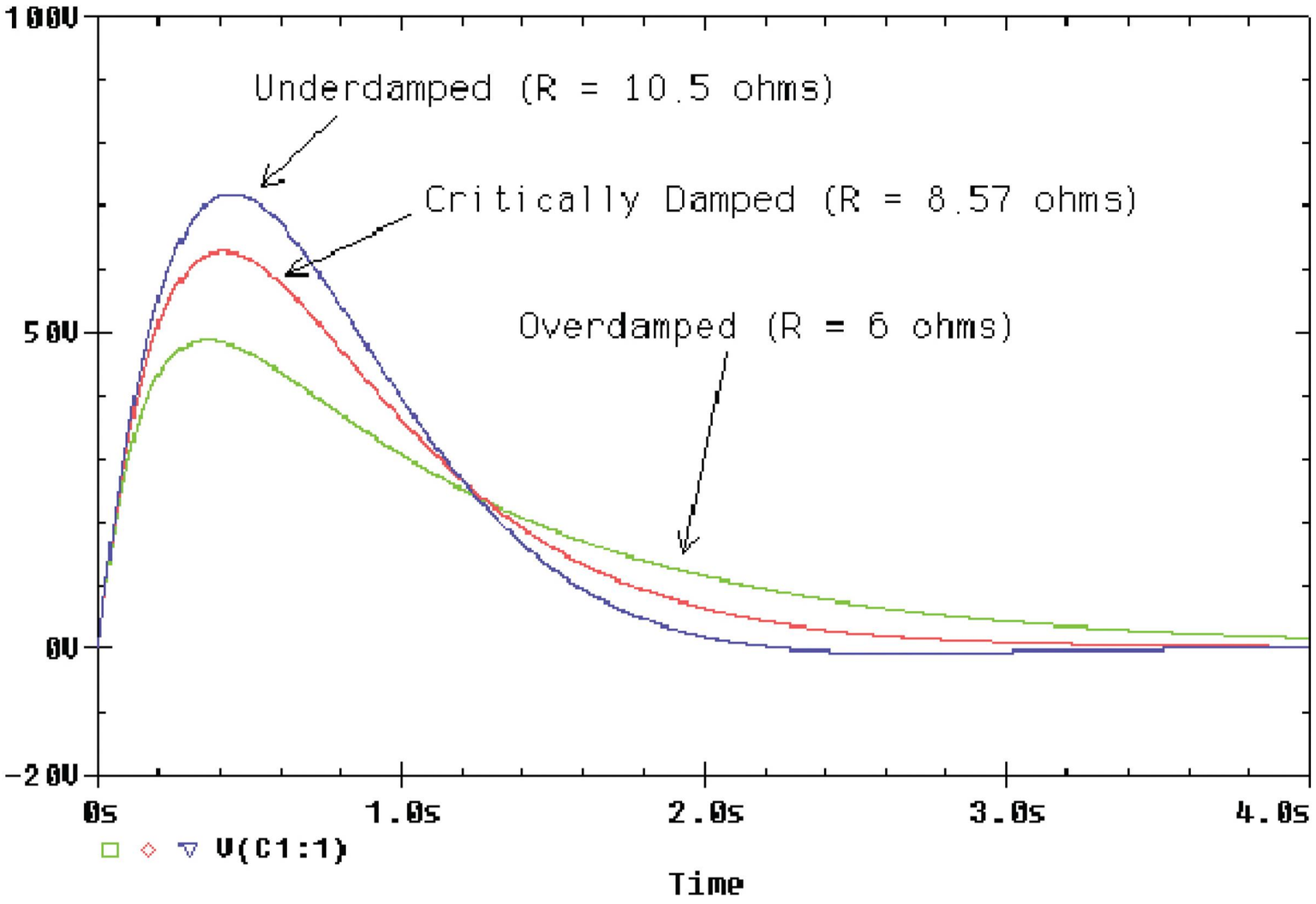

Determining the Response: Underdamped Example

Show for $t>0$

$$i_L = e^{-1.2t}(2.027 \cos 4.75t + 2.561 \sin 4.75t)$$

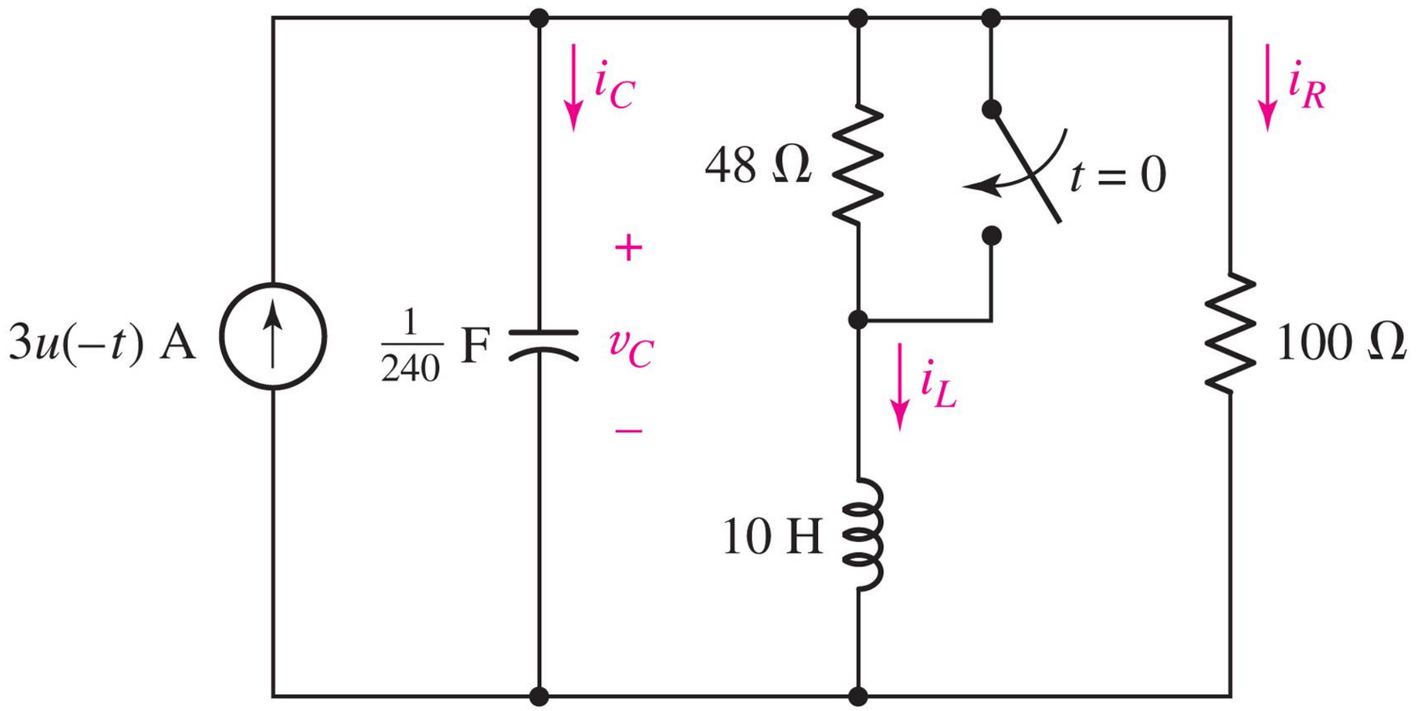

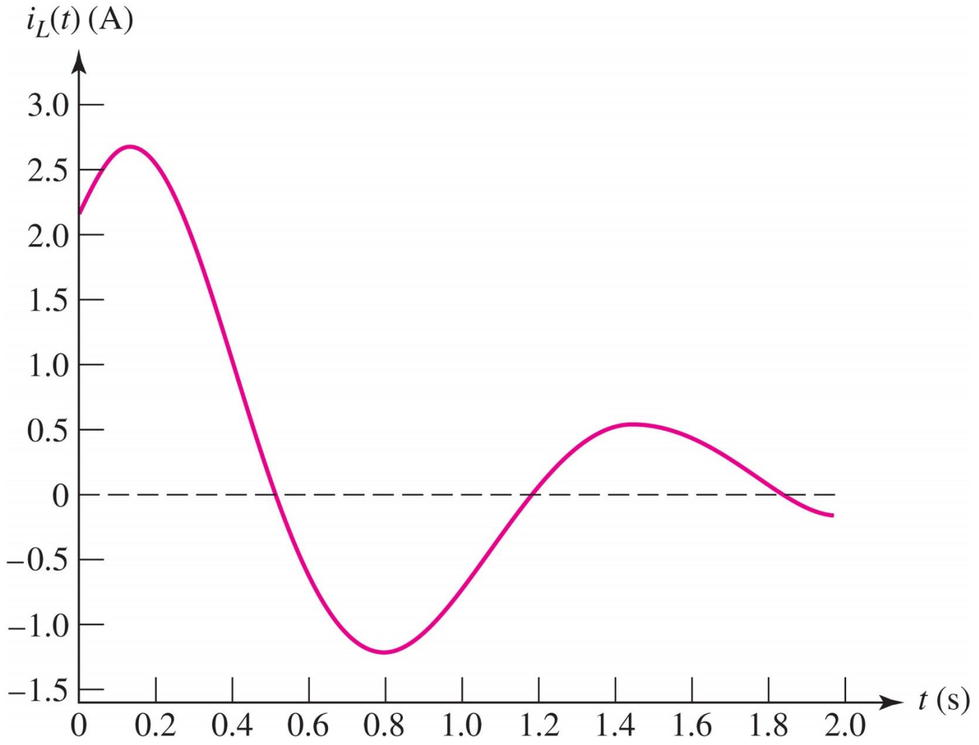

Source-Free Series RLC Circuit

For the series RLC circuit,

$$L\frac{d^2i}{dt^2}+R\frac{di}{dt}+\frac{1}{C}i=0$$

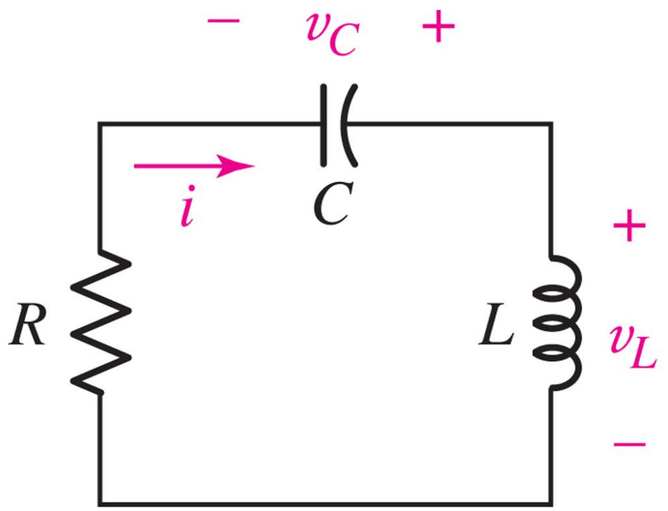

This circuit is the dual of the parallel RLC circuit.

Series RLC Differential Equation

The characteristic equation is:

$$Ls^2 + Rs + \frac{1}{C} = 0$$

Where:

$$s_1, s_2 = -\frac{R}{2L} \pm \sqrt{\left(\frac{R}{2L}\right)^2 - \frac{1}{LC}}$$

Series RLC Circuit Solution

Define $\omega_0 = 1/\sqrt{LC}$ and $\alpha = \dfrac{R}{2L}$

$$s_1 = -\alpha + \sqrt{\alpha^2 - \omega_0^2}$$

$$s_2 = -\alpha - \sqrt{\alpha^2 - \omega_0^2}$$

Then if

$\alpha > \omega_0$ (overdamped):

$$v(t) = A_1 e^{s_1 t} + A_2 e^{s_2 t}$$

$\alpha = \omega_0$ (critically damped):

$$v(t) = e^{-\alpha t}\left(A_1 t + A_2\right)$$

$\alpha < \omega_0$ (underdamped):

$$v(t) = e^{-\alpha t}\left(B_1 \cos(\omega_d t) + B_2 \sin(\omega_d t)\right)$$

Energy transfer between inductor and capacitor in parallel RLC circuit

Underdamped (R=100 Ω) $C = 100nF, L = 7\mu H$

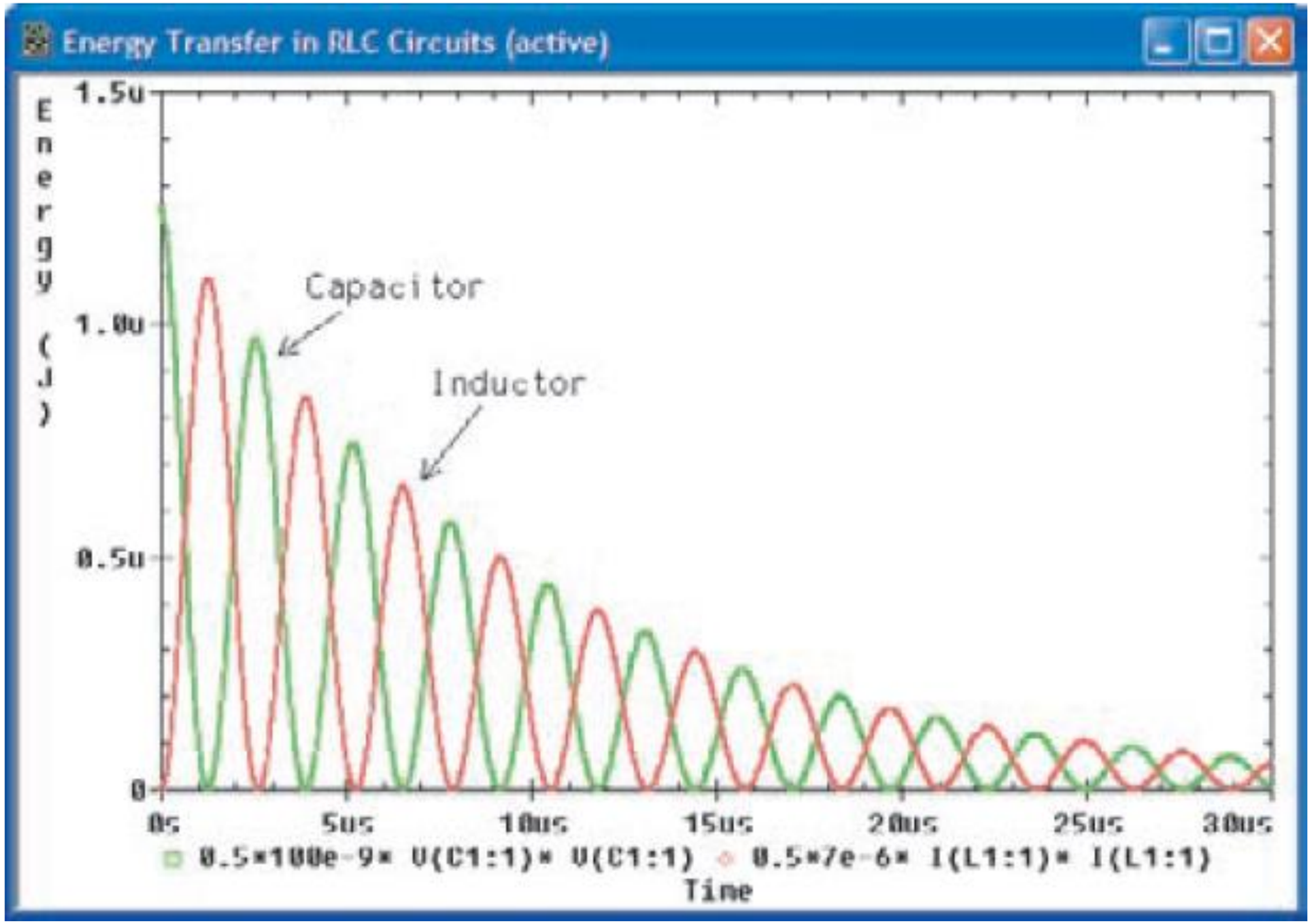

Energy transfer between inductor and capacitor in parallel RLC circuit

critically damped (R=100 Ω) $C = 100nF, L = 7\mu H$

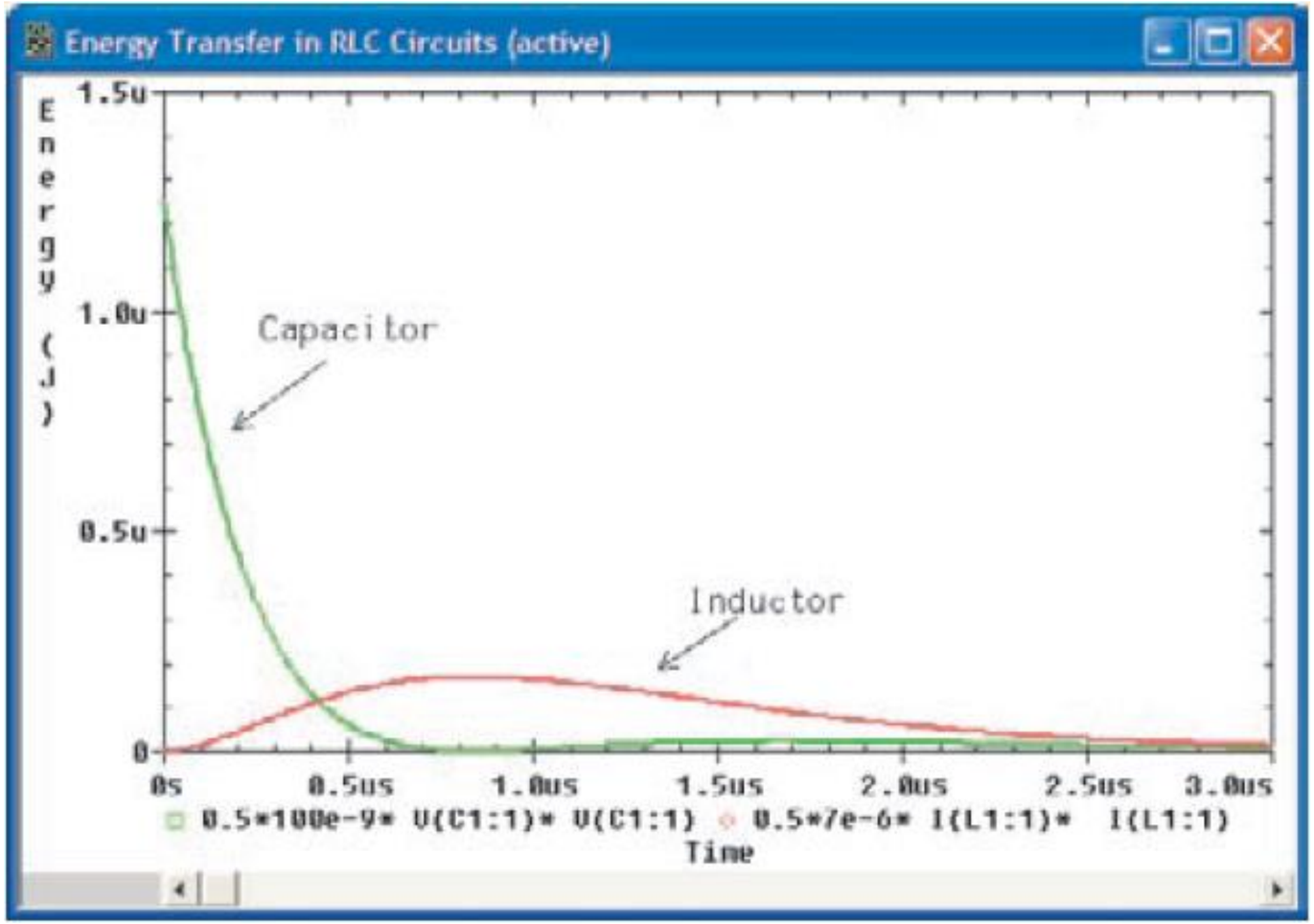

Energy transfer between inductor and capacitor in parallel RLC circuit

Overdamped (R=100 Ω) $C = 100nF, L = 7\mu H$

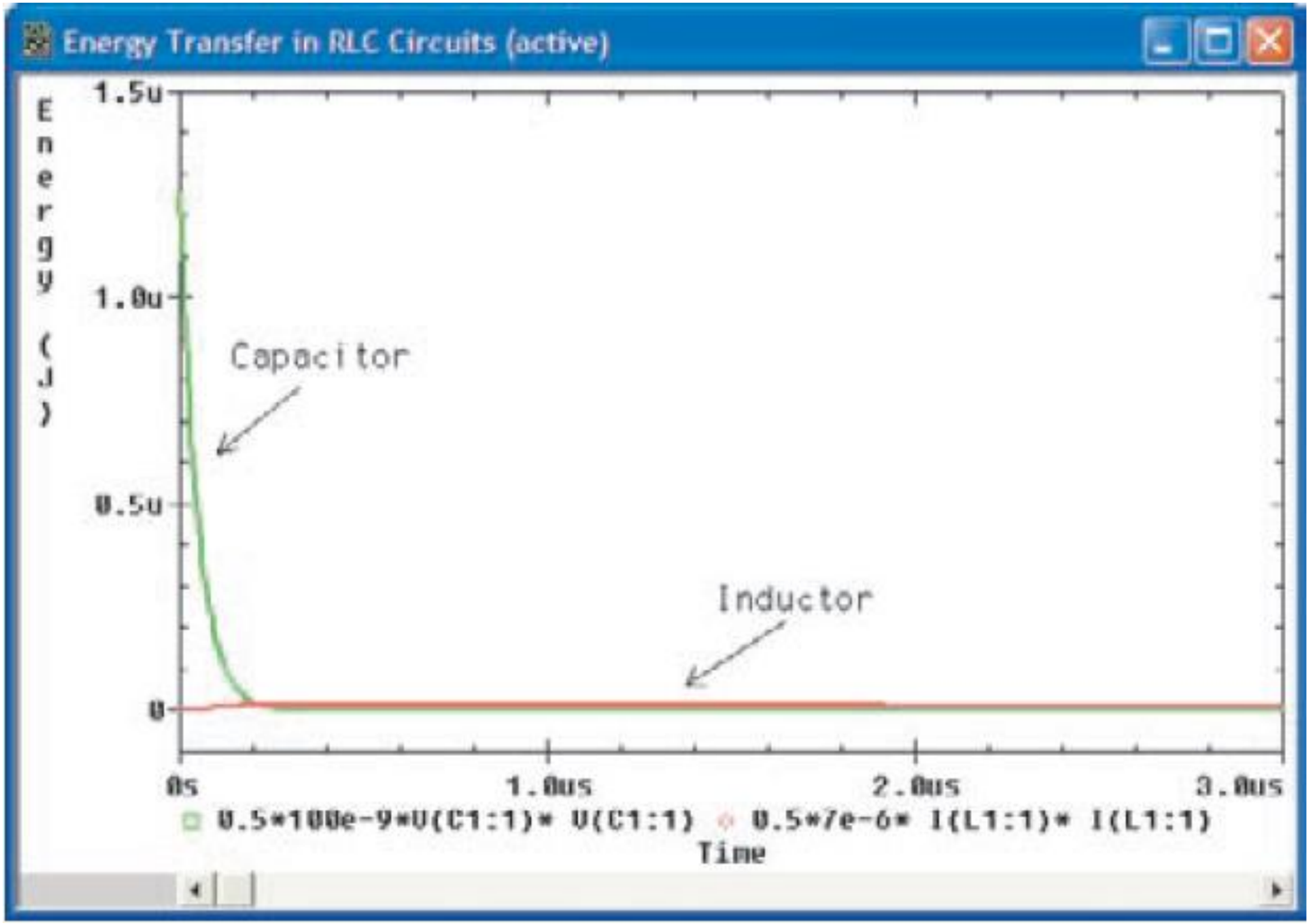

Summary of Source free RLC Circuits

نوع	وضعیت	شرط	α	ω_0	فرم پاسخ طبیعی
موازی	Overdamped	$\alpha > \omega_0$	$\frac{1}{2RC}$	$\frac{1}{\sqrt{LC}}$	$A_1 e^{s_1 t} + A_2 e^{s_2 t}$ $s_{1,2} = -\alpha \pm \sqrt{\alpha^2 - \omega_0^2}$
سری			$\frac{R}{2L}$		
موازی	Critically damped	$\alpha = \omega_0$	$\frac{1}{2RC}$	$\frac{1}{\sqrt{LC}}$	$e^{-\alpha t}(A_1 t + A_2)$
سری			$\frac{R}{2L}$		
موازی	Underdamped	$\alpha < \omega_0$	$\frac{1}{2RC}$	$\frac{1}{\sqrt{LC}}$	$e^{-\alpha t}(B_1 cos\omega_d t + B_2 sin\omega_d t)$ $\omega_d = \sqrt{\omega_0^2 - \alpha^2}$
سری			$\frac{R}{2L}$		

The Complete response

The response of RLC circuits with DC sources and switches will consist of the natural response and the forced response:

$$v(t) = v_f(t)+v_n(t)$$

The complete response must satisfy both the initial conditions $v(0^+)$ and $\frac{dv}{dt}(0^+)$ or the forced response.

For example in the presence of DC sources:

A natural response : $v_n(t) = Ae^{s_1 t} + Be^{s_2 t}$

Full answer: $v(t) = K + Ae^{s_1 t} + Be^{s_2 t}$

Applying the basic conditions: $v(0^+) = V_f + A + B,\ \frac{dv}{dt}(0^+) = As_1 + Bs_2$

Example: Initial Conditions

Find the labeled voltages and currents at $t=0^-$ and $t=0^+$.

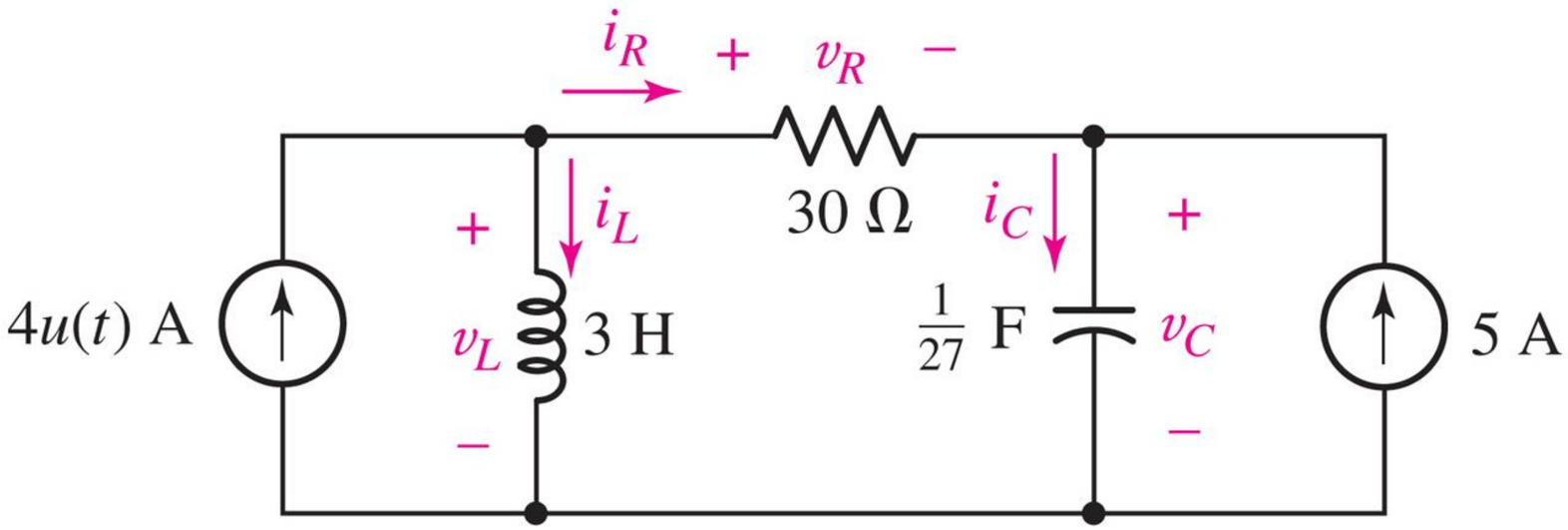

Answer:

$i_R(0^-) = -5$ A	$v_R(0^-) = -150$ V	$i_R(0^+) = -1$ A	$v_R(0^+) = -30$ V
$i_L(0^-) = 5$ A	$v_L(0^-) = 0$ V	$i_L(0^+) = 5$ A	$v_L(0^+) = 120$ V
$i_C(0^-) = 0$ A	$v_C(0^-) = 150$ V	$i_C(0^+) = 4$ A	$v_C(0^+) = 150$ V

Example: Initial Slopes

Find the first derivatives of the labeled voltages and currents at $t=0^+$.

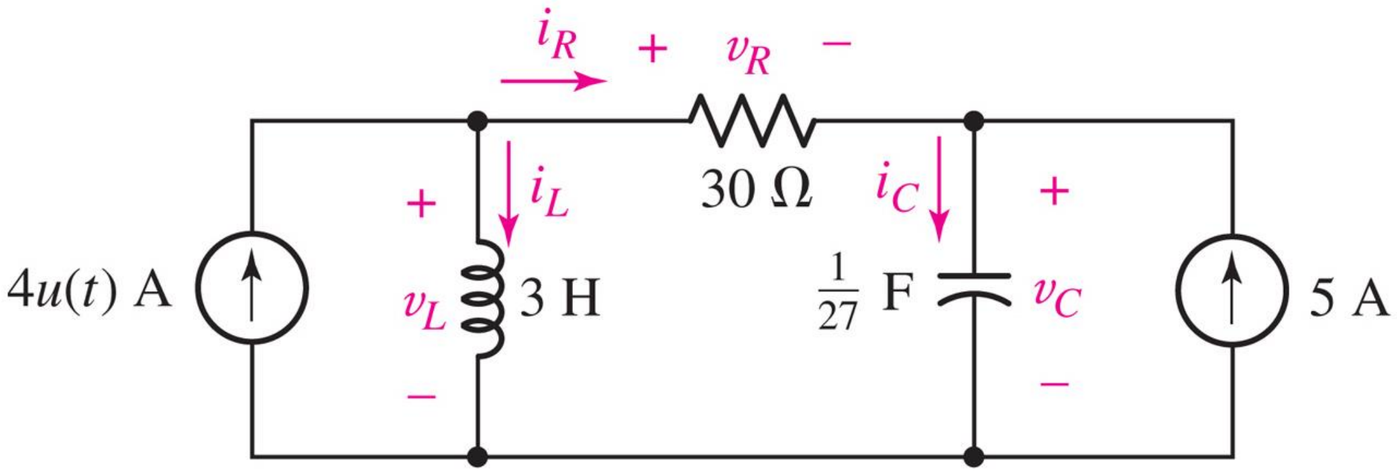

Answer:

$di_R/dt(0^+) = -40$ A/s $\qquad$ $dv_R/dt(0^+) = -1200$ V/s

$di_L/dt(0^+) = 40$ A/s $\qquad$ $dv_L/dt(0^+) = -1092$ V/s

$di_C/dt(0^+) = -40$ A/s $\qquad$ $dv_C/dt(0^+) = 108$ V/s

Example: Complete Response

Show that for t>0

$$v_C(t) = 150 + 13.5(e^{-t} - e^{-9t}) \text{ volts}$$

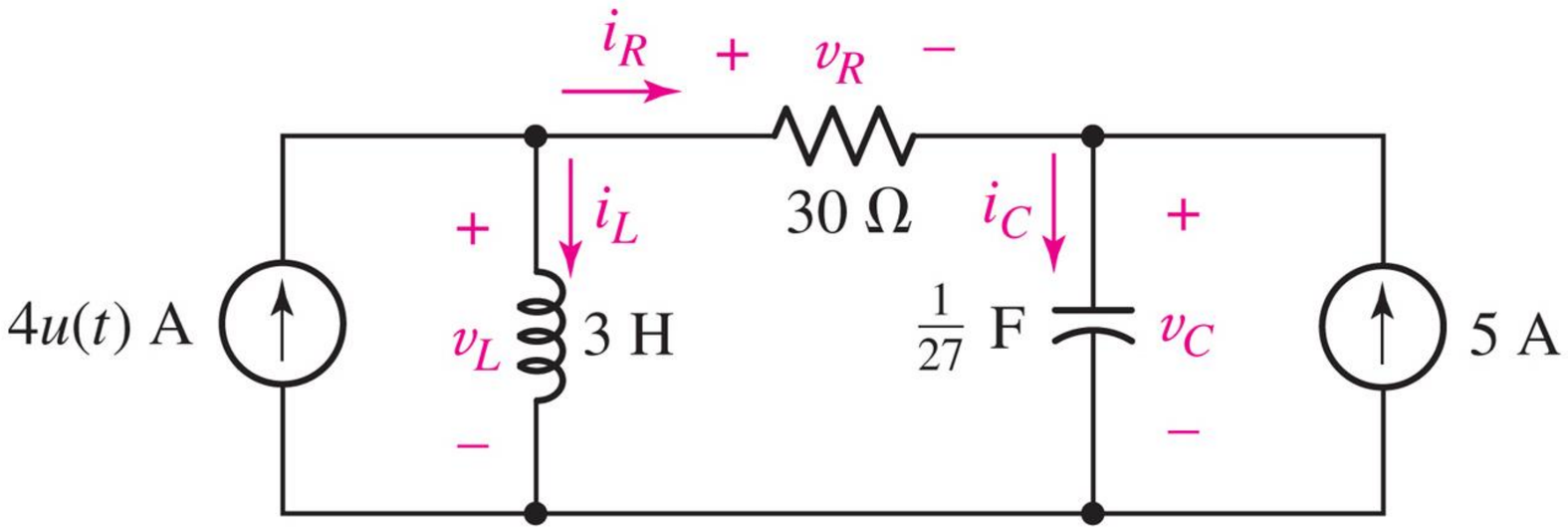

The Lossless LC Circuit

- The resistor in the RLC circuit serves to dissipate initial stored energy.
- When this resistor becomes 0 in the series RLC or infinite in the parallel RLC, the circuit will oscillate.

Example: for t>0, if i(0)=-1/6 A and v(0)=0 V

$$v(t) = 2 \sin 3t$$

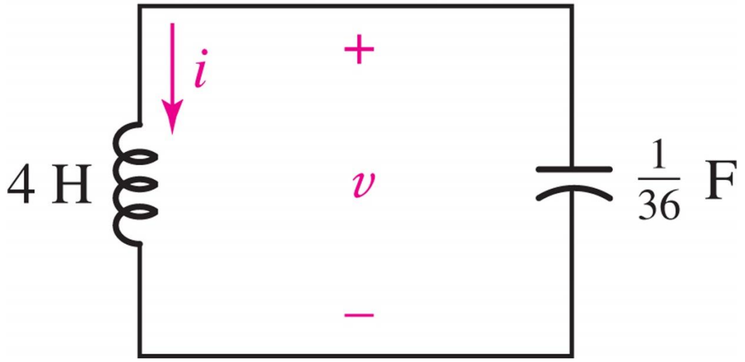

Practice 1

Show that:

$$v_C(t) = -e^{-0.8t}(5\cos 9.97t + 0.4\sin 9.97t)V$$

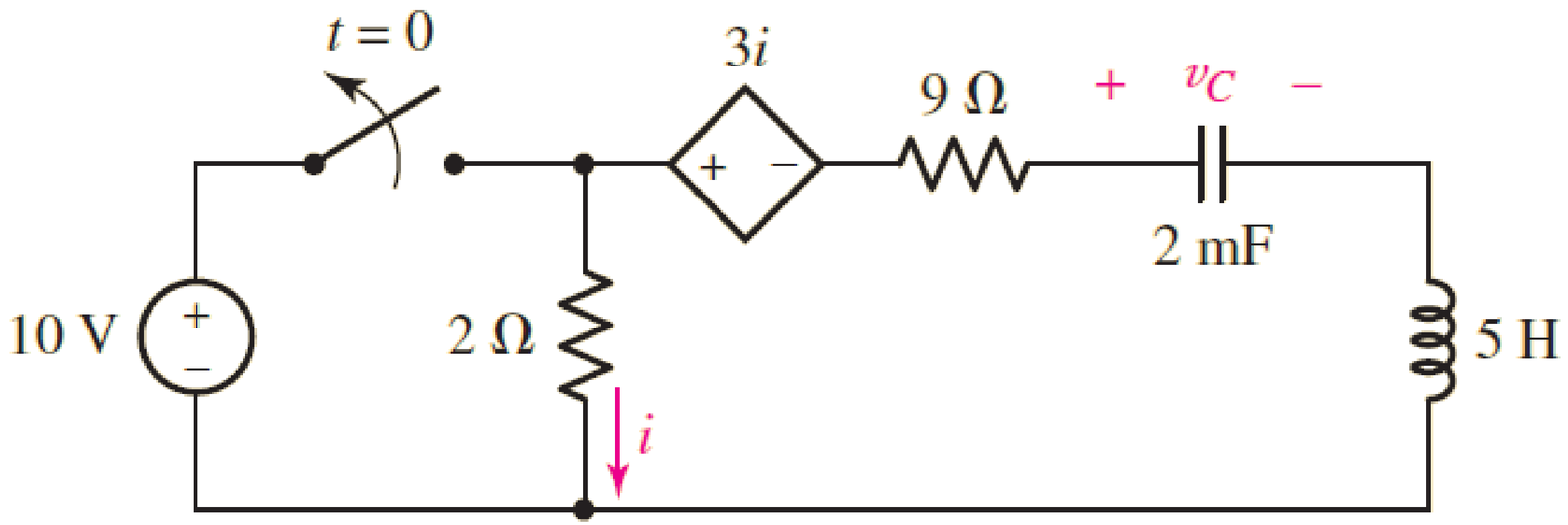

Practice 2

The key is closed at time t=0. Find R, L and C such that:

$$v(t) = 5e^{-400t}\cos(300t)$$

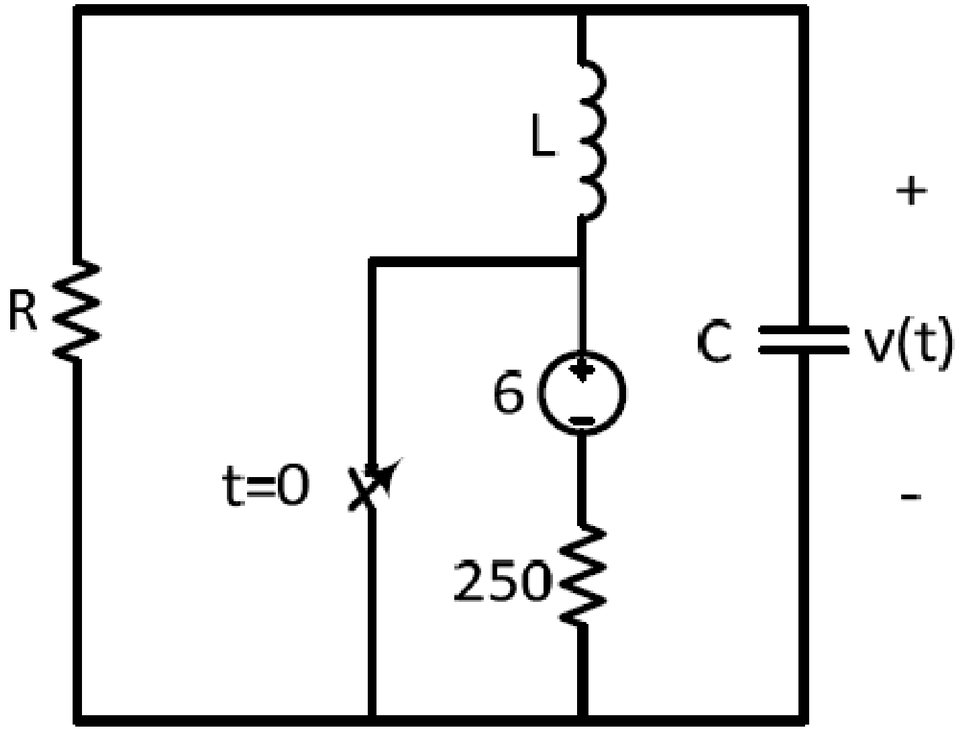

Practice 3

Find $vc(t)$.

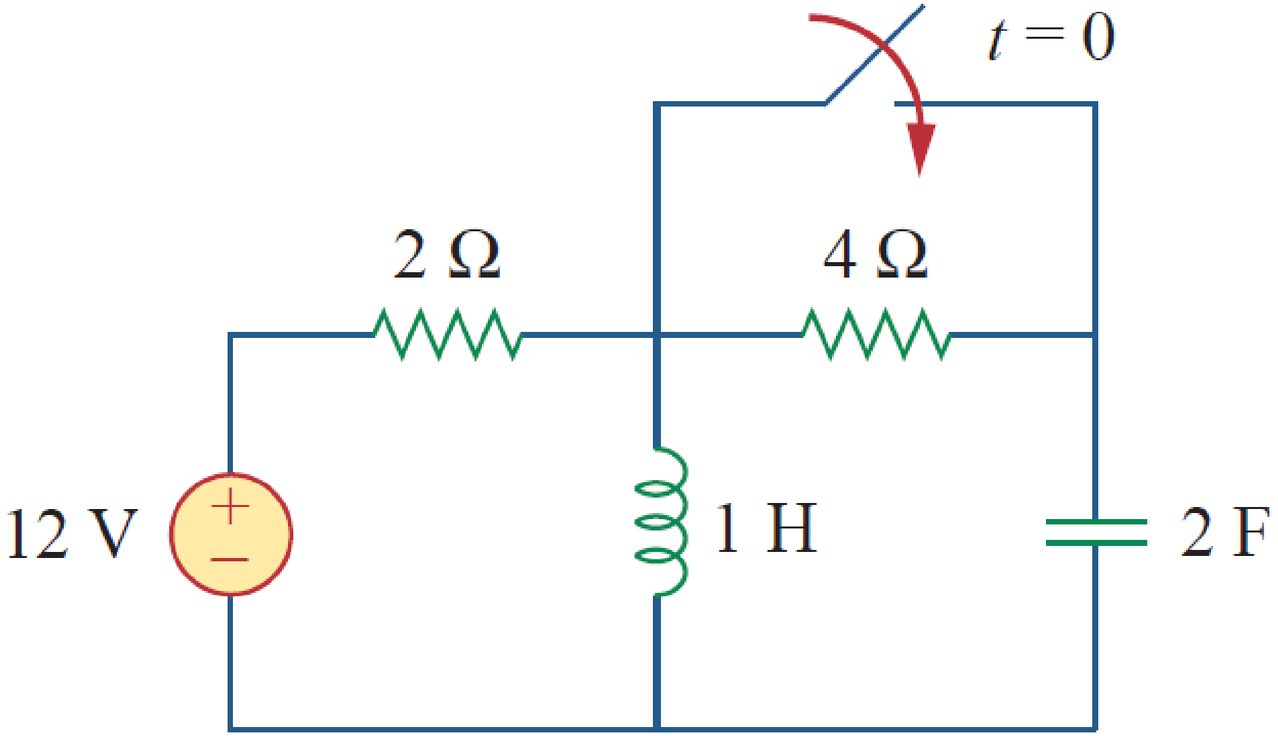

Thanks

دانشگاه صنعتی امیرکبیر
(پلی تکنیک تهران)

Electrical and Electronic Circuits

chapter 8. Sinusoidal Steady State Analysis

Afarghadan@aut.ac.ir

عظیم فرقدان

مهر ۱۴۰۳

Objectives of the Lecture

- Introduction: Sinusoidal Waves and Complex Numbers
- Force Response to Sinusoidal Input
- The Concept of the Phasor

The Rl and RC Circuit

If we know that the only independent sources in our circuit are **sinusoidal**, and we know that all transients are gone (steps, switches, pulses)…

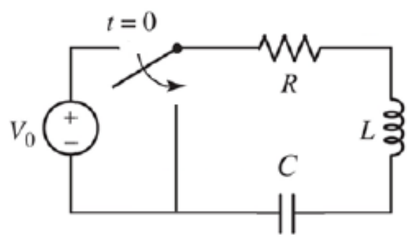

$$\alpha = \frac{R}{2L}, \quad \omega_0 = \frac{1}{\sqrt{LC}}$$

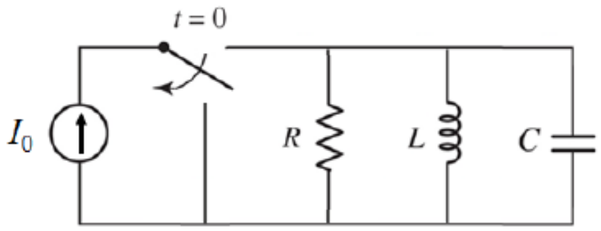

$$\alpha = \frac{1}{RC}, \quad \omega_0 = \frac{1}{\sqrt{LC}}$$

NOT NECESSARY

$\alpha > \omega_0$	$\alpha = \omega_0$	$\alpha < \omega_0$
OVERDAMPED	**CRITICALLY DAMPED**	**UNDERDAMPED**
$x(t) = X_1 e^{c_1 t} + X_2 e^{c_2 t} + X_3$	$x(t) = e^{-\alpha t}(X_1 t + X_2) + X_3$	$x(t) = e^{-\alpha t}\begin{bmatrix} X_1 \cos(\omega_d t) \\ + X_2 \sin(\omega_d t) \end{bmatrix} + X_3$

…we may instead solve the circuit **algebraically** (e.g. nodal, mesh) without determining initial conditions, final conditions, etc.

Sinusoidal Waves

Amplitude V_m

Argument ωt

Angular Frequency ω

Period T

Frequency f

$$v(t) = V_m \cdot \sin(\omega t + \phi_0) \ , \quad \phi_0 = 0$$

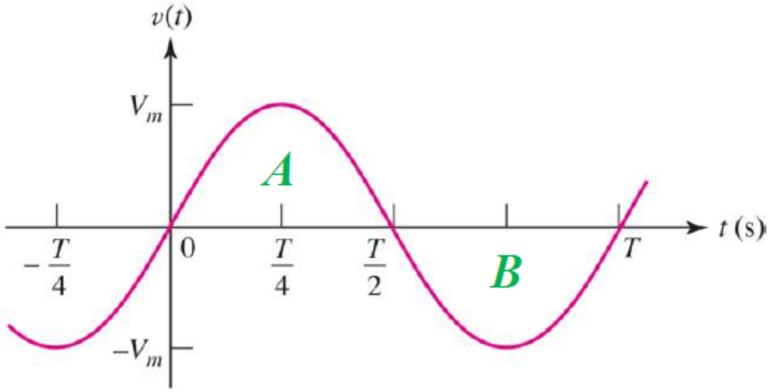

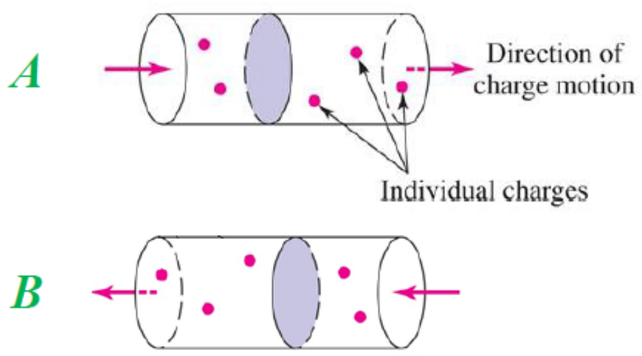

V_m = amplitude (in Volts), ϕ_0 = phase (in radians)

ω = frequency (in radians/second)

T = period (in seconds)

f = frequency (in cycles/second) = $1/T = \omega / 2\pi$

$$V_m \cdot \sin(\omega t + \phi_0) = V_m \cdot \cos(\omega t + \phi_0 - \pi/2)$$

Sinusoidal Waves

$$v(t) = V_m \sin(\omega t + \phi) \qquad T = \frac{2\pi}{\omega} \qquad f = \frac{1}{T}$$

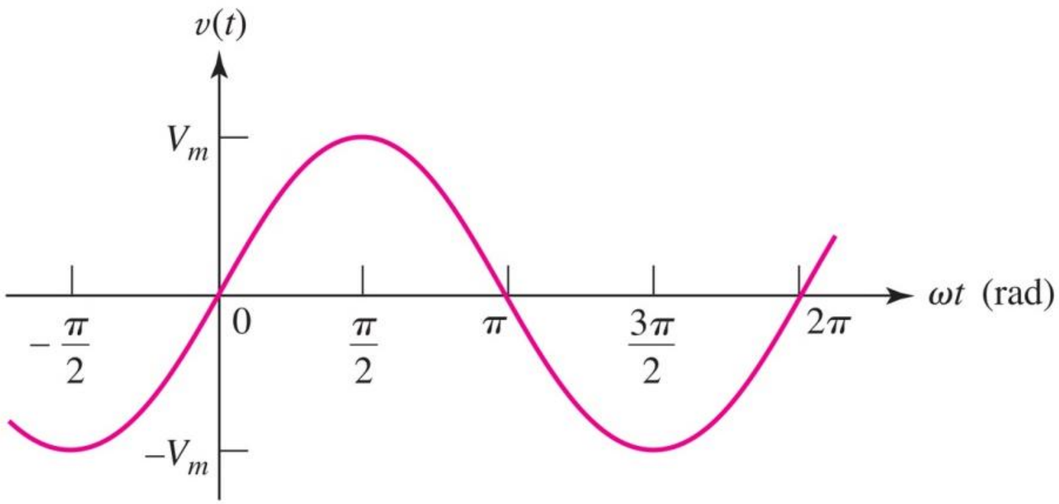

where

V_m is the amplitude of the sinusoid

w is the angular frequency in radians/s

ϕ is the phase angle in degrees

$wt + \phi$ is the argument of the sinusoid

T is the period of a sinusoid in seconds

f is the frequency with units of Hz (cycles per second)

Phase of the Sinusoidal Wave

In the more general case, a sinusoidal wave includes a phase θ.

$$v(t) = V_m \sin(\omega t + \theta)$$

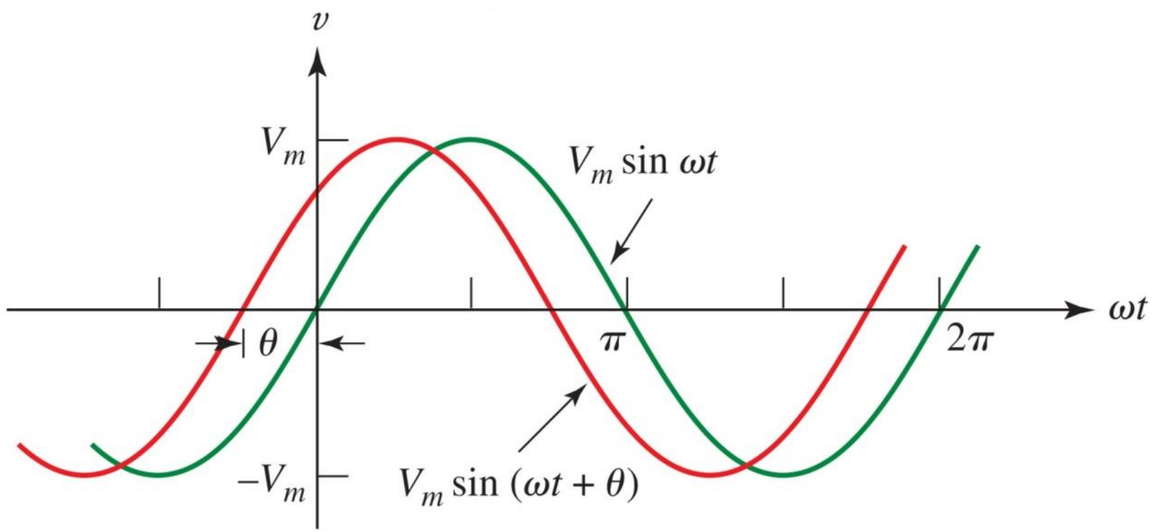

We say that the new wave leads the original wave by a phase of θ.

We say that the original wave lags behind the new wave by a phase of θ.

Complex numbers

- A complex number z can be written in rectangular form as

❖ $a + bj \leftrightarrow Ae^{j\theta}$

❖ $A = \sqrt{a^2 + b^2},\ \theta = \tan^{-1}\frac{b}{a}$

❖ $a = A\cos\theta\,,\quad b = A\sin\theta$

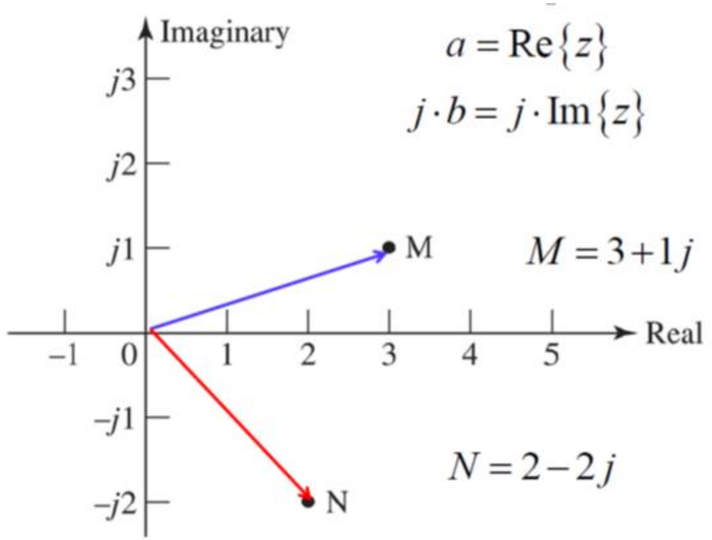

- The complex number z can also be written in polar or exponential form as $z = A\measuredangle\theta = Ae^{j\theta}$

✓ $2\measuredangle 45° = 2e^{j45} = 2\cos 45 + j2\sin 45 = \sqrt{2} + \sqrt{2}j$

✓ $\frac{1}{1+2j} = \frac{1\measuredangle 0}{\sqrt{5}\measuredangle \tan^{-1} 2} = \frac{1}{\sqrt{5}}\measuredangle -\tan^{-1} 2$

Multiplication and Division

- ✓ Subtraction with Rectangular Coordinates

If $Z = X + Y$ and $X = a + jb$ and $Y = c + jd$

$Z = (a - c) + j(b - d) \rightarrow Re\,(Z) = (a - c)$ and $Im(Z) = (b - d)$

- ✓ Multiplication and Division

If $V = v\angle f$ and $I = i\angle q$

$P = VI = vi\,\angle(f + q)$ and $Z = V/I = v/i\,\angle(f - q)$

Forced Response to Sinusoidal Input

- In many applications, when the input is sinusoidal, the transient (natural) response is not of interest; instead, we are primarily concerned with finding the steady-state (forced) response.

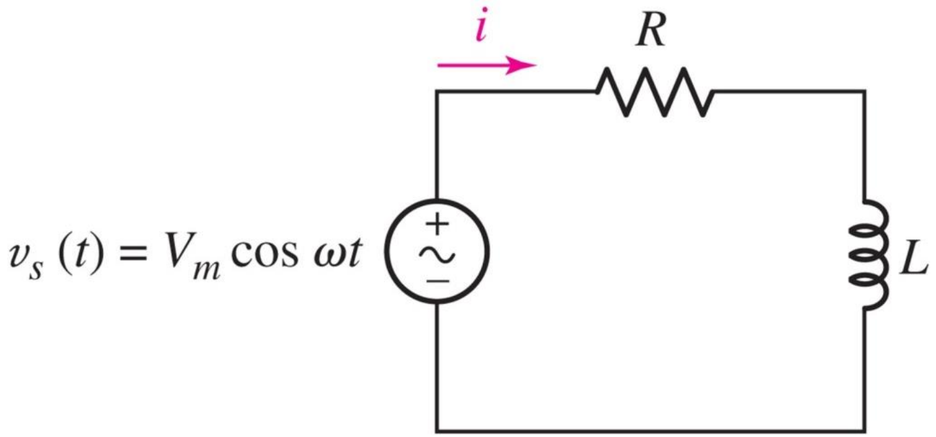

- Here, we seek a method to simplify obtaining this response.

- ✓ We apply KVL (Kirchhoff's Voltage Law):

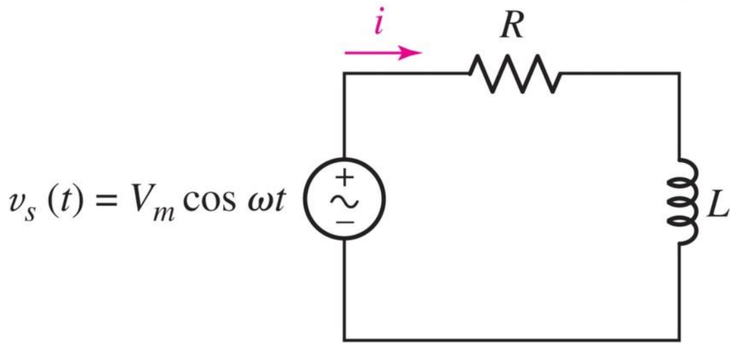

$$L\frac{di}{dt} + Ri = V_m \cos(\omega t)$$

- ✓ The forced response is of the same form as the input.

$$i(t) = I_1 \cos \omega t + I_2 \sin \omega t$$

- ✓ By substituting into the differential equation, the coefficients are determined.

$$i(t) = \frac{RV_m}{R^2 + \omega^2 L^2} \cos \omega t + \frac{\omega L V_m}{R^2 + \omega^2 L^2} \sin \omega t$$

Conclusion?

- ✓ The forced response to a sinusoidal input can be obtained as before by solving the differential equation.

- ✓ Is there a way to avoid differential equations and rely solely on algebraic calculations to find the forced sinusoidal response?

- ✓ Yes, by using the concept of the phasor!

- Main problem: finding the steady-state response of circuit N to a sinusoidal input.

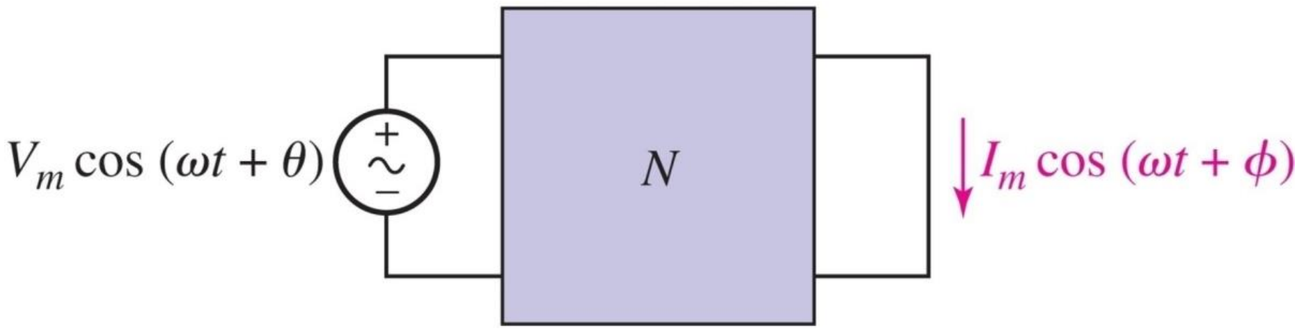

- Alternative approach: let us determine the response of the circuit to the following exponential input:

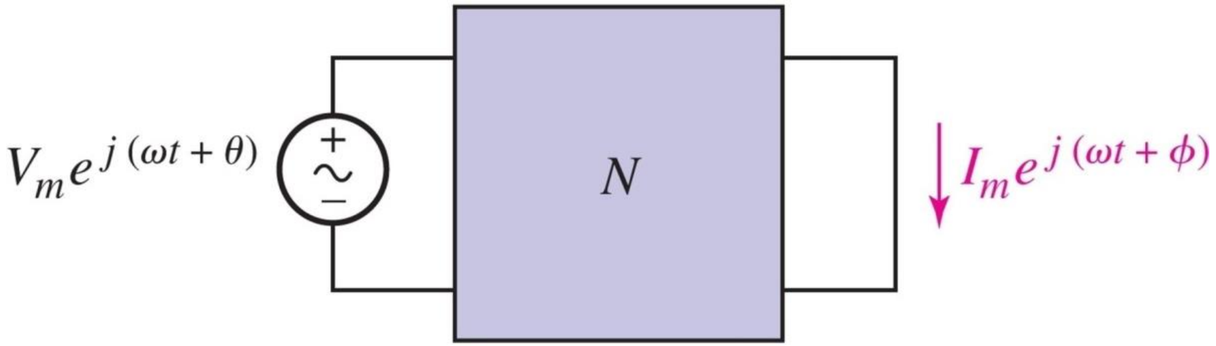

Forced Response to Complex Exponential Input

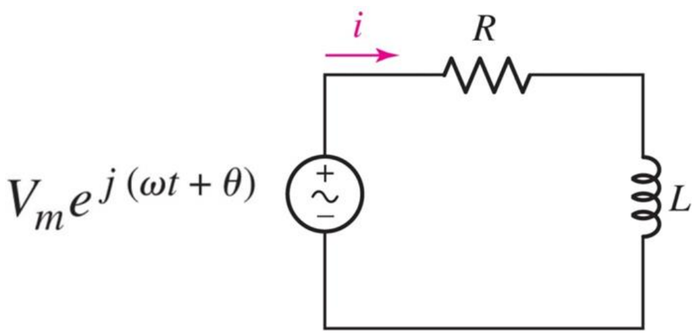

1. By applying KVL, we have:

$$L\frac{di}{dt} + Ri = v_s$$

2. The forced response is of the same form as the output.

$$i(t) = I_m e^{j(\omega t+\phi)}$$

3. Substituting into the differential equation:

- $j\omega L I_m e^{j(\omega t+\phi)} + R I_m e^{j(\omega t+\phi)} = V_m e^{j(\omega t+\theta)}$
- $j\omega L I_m e^{j\phi} + R I_m e^{j\phi} = V_m e^{j\theta}$
- $I_m e^{j\phi} = \frac{V_m e^{j\theta}}{R+j\omega L} \rightarrow I_m = \frac{V_m}{\sqrt{R^2+\omega^2 L^2}}, \quad \phi = \theta - \tan^{-1}\frac{\omega L}{R}$
- $i(t) = Re\left[I_m e^{j(\omega t+\phi)}\right] = \frac{V_m}{\sqrt{R^2+\omega^2 L^2}}\cos(\omega t + \theta - \tan^{-1}\frac{\omega L}{R})$

The concept of phasor

- ✓ In the sample circuit shown, we arrive at the following relationship:

$$I_m e^{j\phi} = \frac{V_m e^{j\theta}}{R + j\omega L}$$

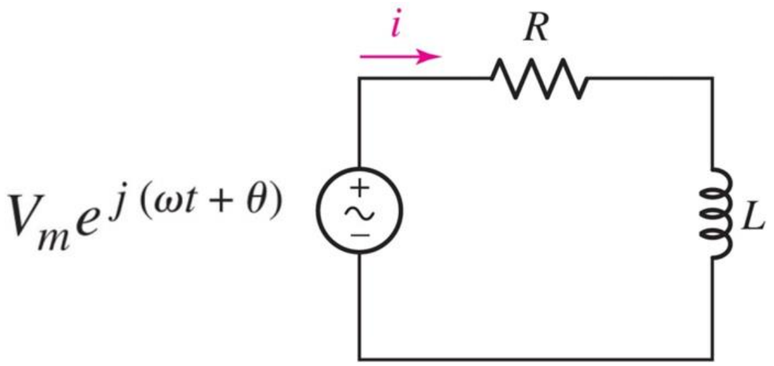

- ✓ A complex number with a magnitude of V_m and an angle θ, represented as $V_m e^{j\theta}$, is referred to as a phasor.
- ✓ Similarly, the phasor for the current is $I_m e^{j\phi}$.
- ✓ The relationship between the phasors in the circuit is an algebraic relationship, not a differential one!

Sinusoidal vs. Complex Representation

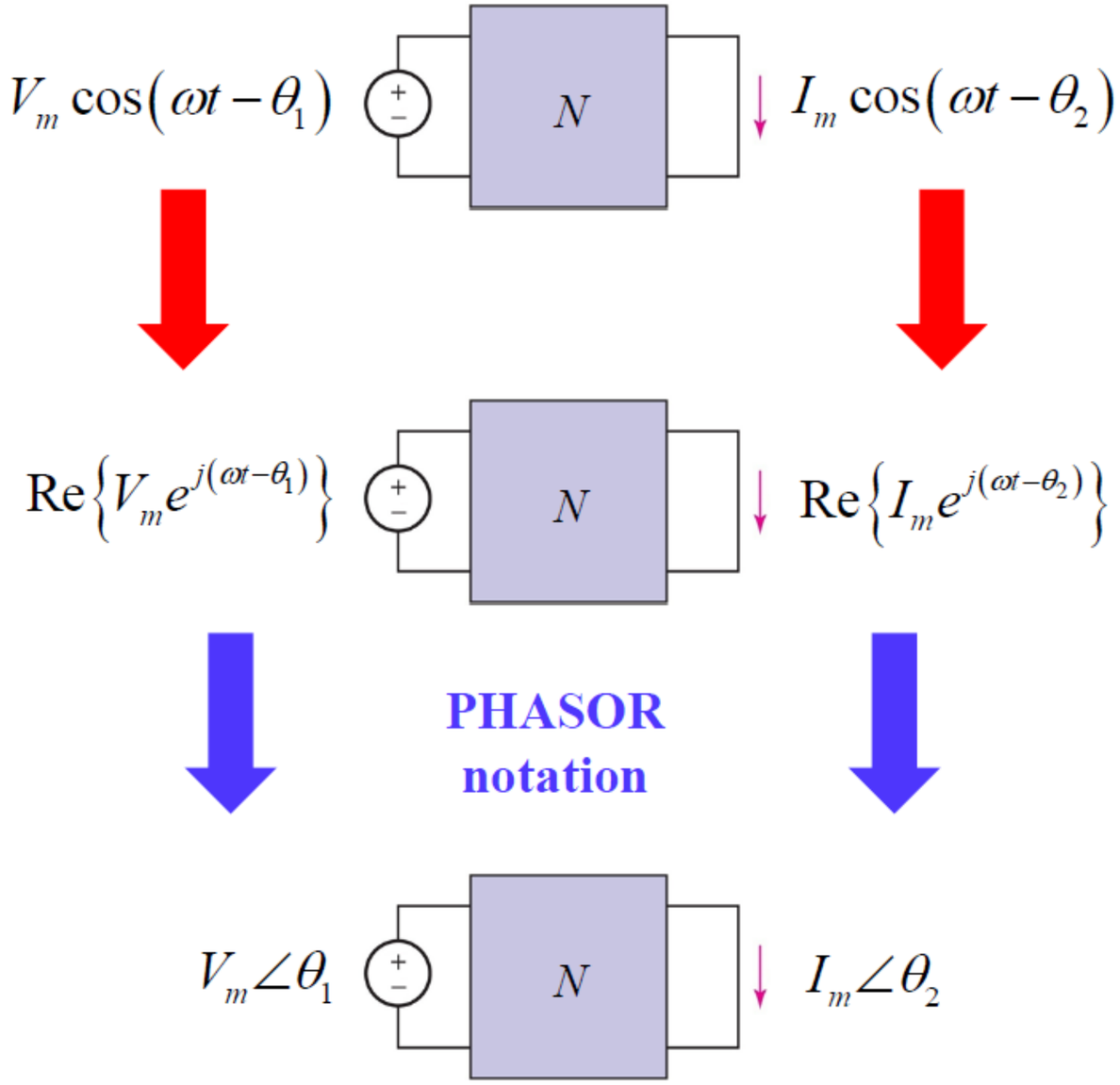

The phasor of the resistor

The voltage phasor and current phasor of a resistor also follow Ohm's Law.

Thus, the phasor of the resistor is simply R.

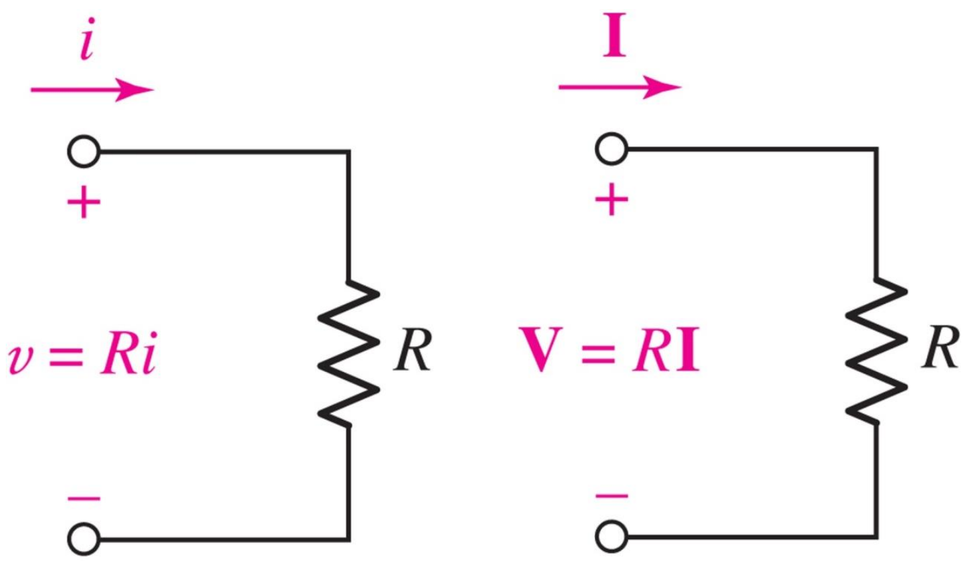

The phasor of the inductor

The differential relationship between the current and voltage of an inductor in the time domain transforms into an algebraic relationship in the phasor domain.

The phasor of the inductor is $j\omega L$, and its voltage and current phasors satisfy Ohm's law.

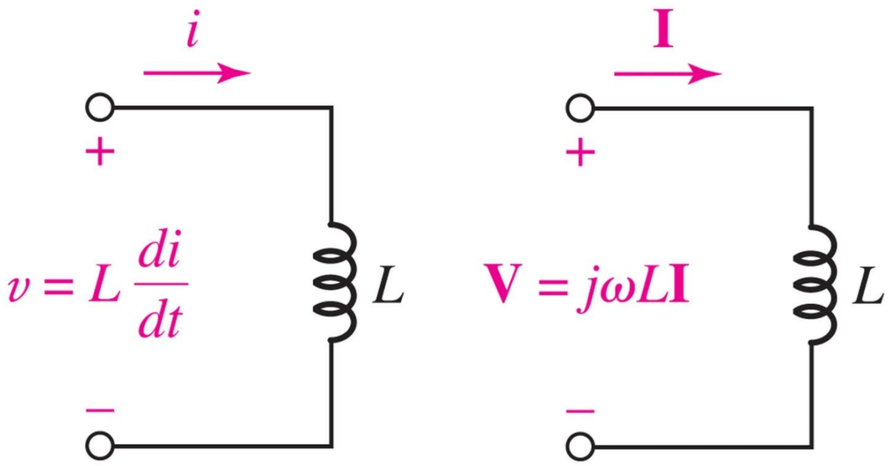

The phasor of the capacitor

The phasor of the capacitor is $\frac{1}{j\omega C}$, and the relationship between its voltage and current in the phasor domain, like that of the inductor and resistor, follows Ohm's law.

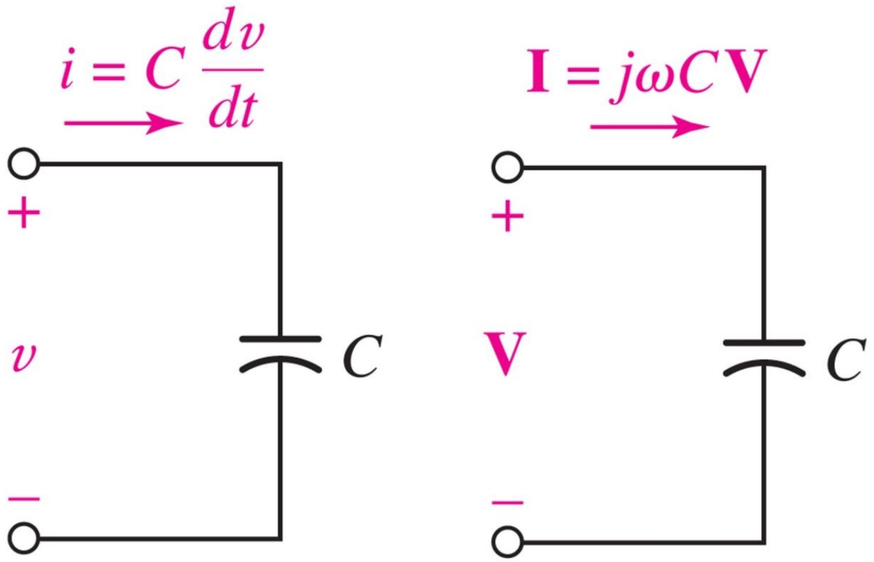

Summery

Time Domain

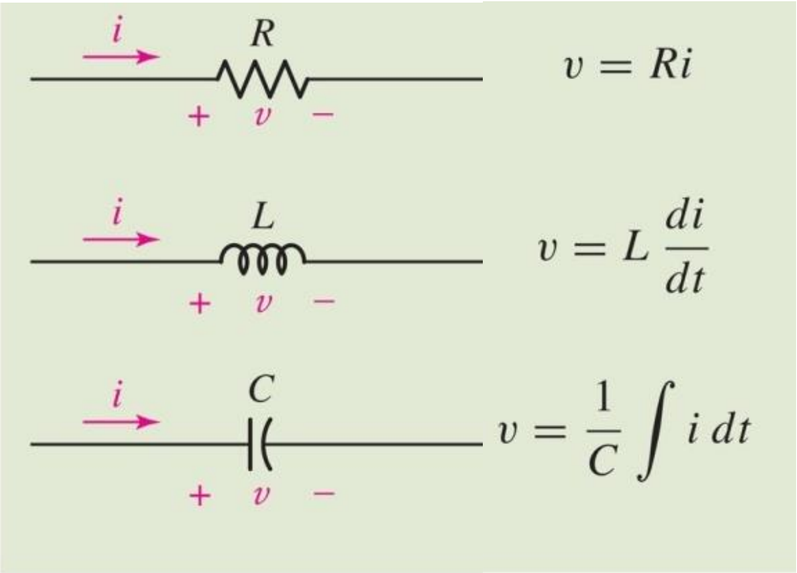

Differential calculations with real numbers

Phasor Domain

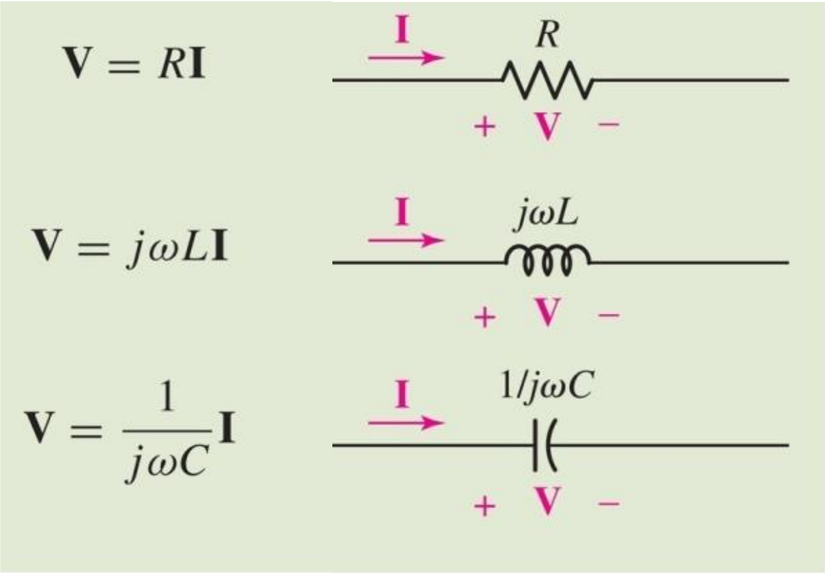

Algebraic calculations with complex numbers

Kirchhoff's laws for phasors

- The KVL relationship also holds for voltage phasors in a loop.

$$\mathbf{V}_1 + \mathbf{V}_2 + \cdots + \mathbf{V}_N = 0$$

- Similarly, the KCL relationship holds for current phasors at a node.

$$\mathbf{I}_1 + \mathbf{I}_2 + \cdots + \mathbf{I}_N = 0$$

Impedance

- ✓ The ratio of the voltage phasor to the current phasor is called impedance.

$$Z_R = R \qquad Z_L = j\omega L \qquad Z_C = 1/j\omega C$$

- ✓ Impedance is equivalent to resistance in the phasor domain.

- ✓ Impedance is a complex number and is measured in ohms.
- ✓ The real part of impedance is called resistance, and the imaginary part is called reactance.

Series and parallel impedances can be combined in the same way as resistances.

Admittance

- The inverse of impedance is called admittance.

$$Y_R = 1/R \qquad Y_L = 1/j\omega L \qquad Y_C = j\omega C$$

- Admittance is equivalent to conductance.

- Admittance is a complex number, and its unit is Siemens.

- The real part of admittance is called conductance, and the imaginary part is called susceptance.

Summary of the Phasor Method

1. Determine the impedance of all elements based on the source frequency.

$$Z_R = R \qquad Z_L = j\omega L \qquad Z_C = 1/j\omega C$$

1. Replace the source values with their corresponding phasors.

2. Analyze the circuit in the phasor domain as if it were a resistive circuit, and find the phasors for all currents and voltages in the circuit.

3. Converting phasors back to the time domain: Multiply the desired phasor by $e^{j\omega t}$ and take the real part as the final response.

Example 1: Using Phasors

Find the steady-state response of the voltage across the capacitor.

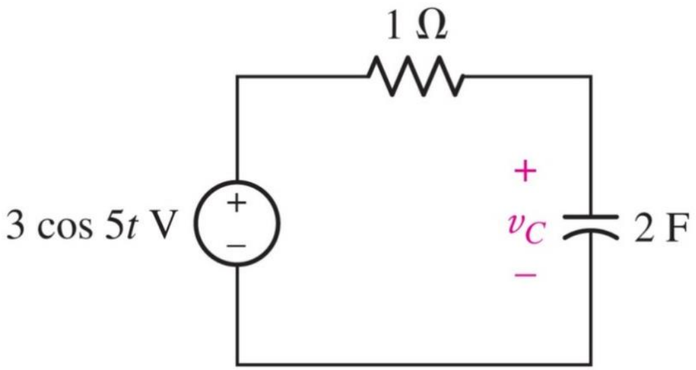

$$V_s = 3\measuredangle 0, \qquad Z_R = 1, \qquad Z_C = \frac{1}{j\omega C} = \frac{1}{10j} = -0.1j$$

$$V_c = \frac{-0.1j}{1-0.1j} \times 3 = \frac{3}{1+10j} = \frac{3\measuredangle 0}{\sqrt{101}\measuredangle \tan^{-1} 10} = 0.298\measuredangle -84.3$$

$$v_C(t) = Re\left[0.298e^{j(5t-84.3)}\right] = 0.298\cos(5t-84.3)$$

Example 2: Calculation of Equivalent Impedance

Determine the equivalent impedance of the circuit below at a frequency of 5 rad/s.

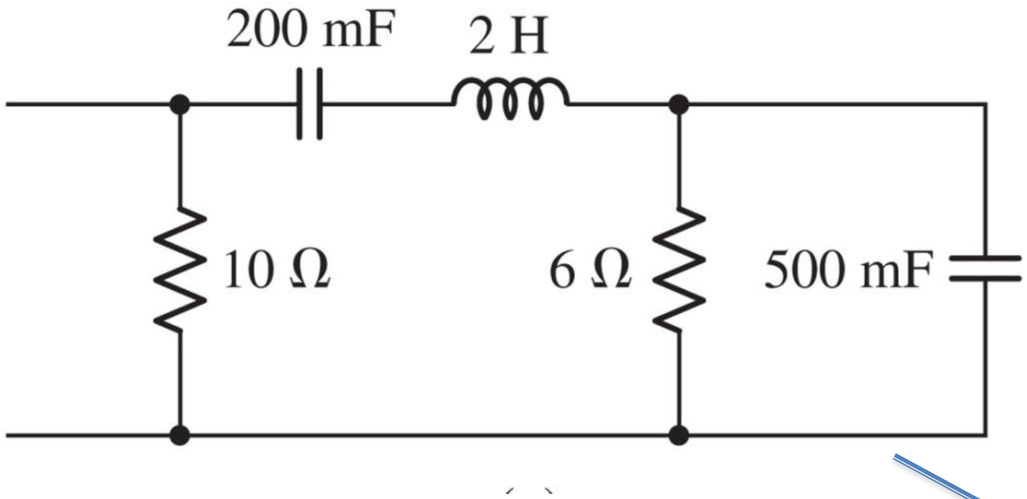

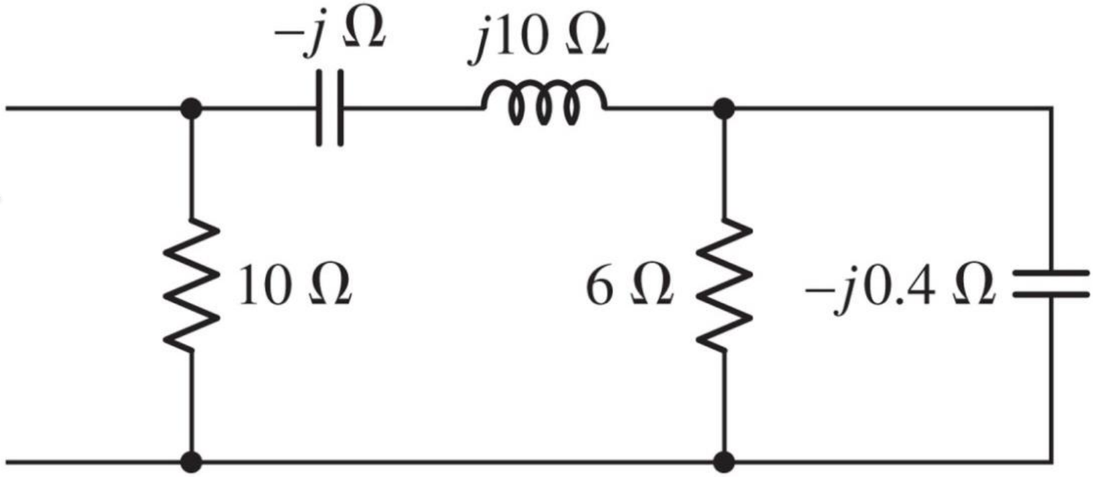

Answer: 4.255 + j4.929 Ω

Example 3: Node Analysis

Determine the phasors for the voltages V1 and V2.

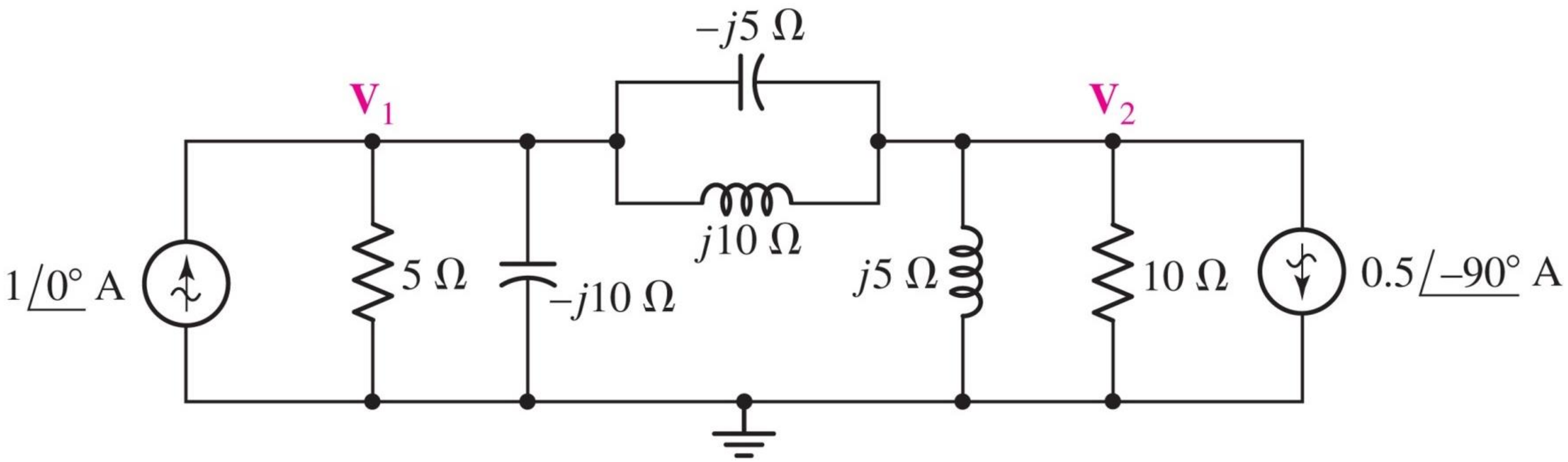

Example 4: Mesh Analysis

Determine the currents i1(t)i_1(t)i1(t) and i2(t)i_2(t)i2(t).

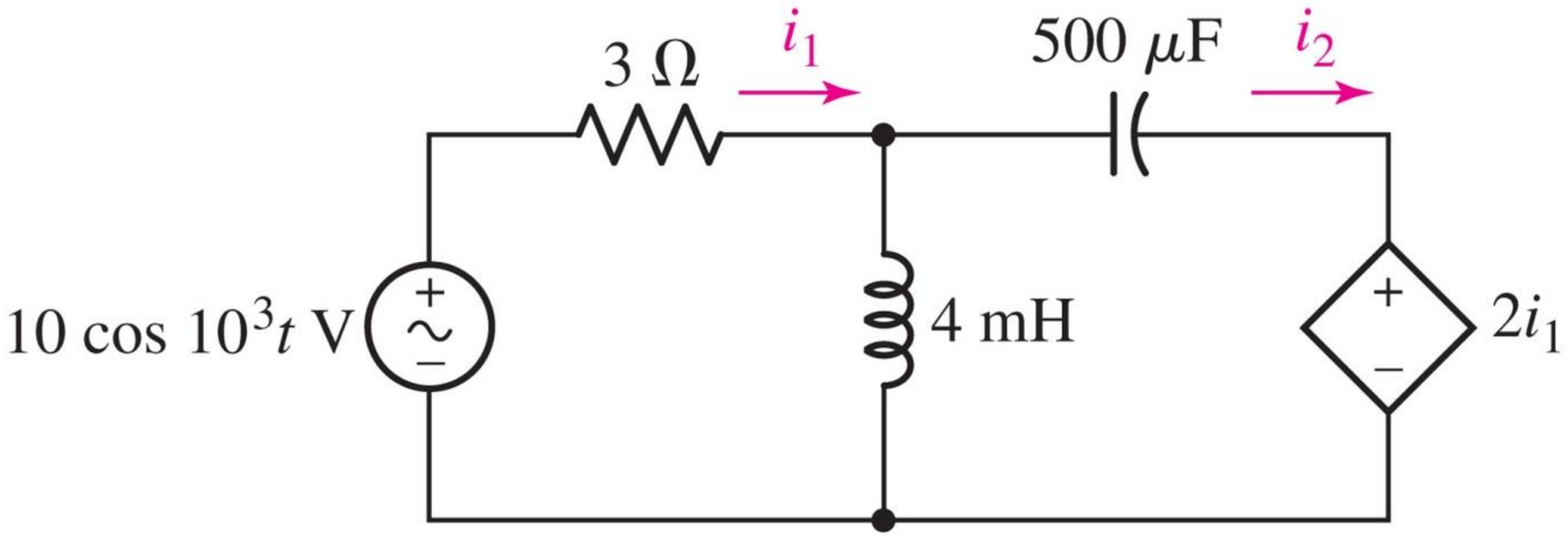

Answer: i_3(t) = 1.333 sin t V

Example 5: Superposition Theorem

The principle of superposition is also valid for phasors. Use this principle to determine the voltage V1

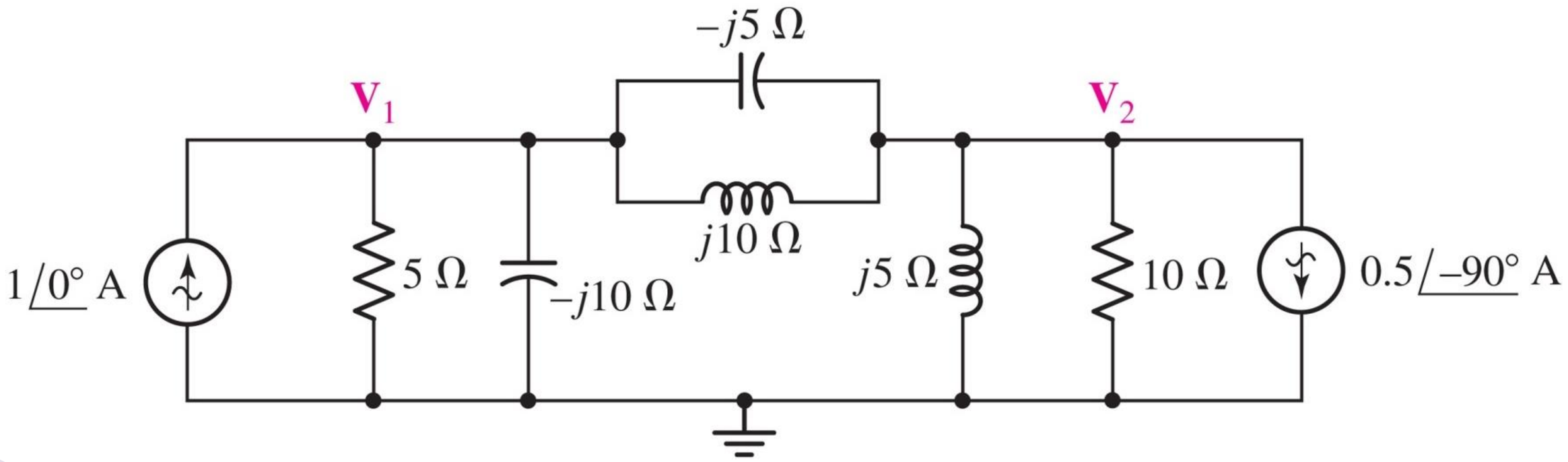

Example 6: Thevenin Equivalent Circuit

Theorems of Thevenin and Norton are also applicable to phasors. By calculating the Thevenin equivalent circuit of the given diagram, first determine the current flowing between nodes V1 and V2, and then find the voltage V1.

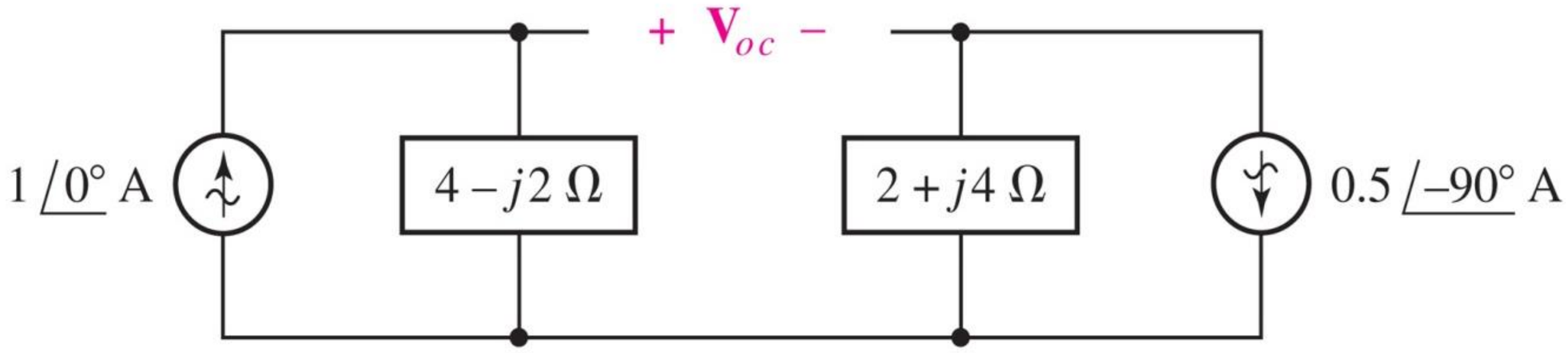

Phasor Vector Diagram

- Assume we have a phasor vector in the complex plane that rotates around the origin with an angular speed ω.
- The figure below illustrates the position of this vector at the moment t =0. This represents the phasor voltage V1 with a magnitude of 10 and an angle of 53.1 degrees.

$$V_1 = 10e^{j53.1}$$

- The projection of this vector onto the real axis at any moment indicates the instantaneous voltage v1(t):

$$v_1(t) = 10\cos(\omega t + 53.1)$$

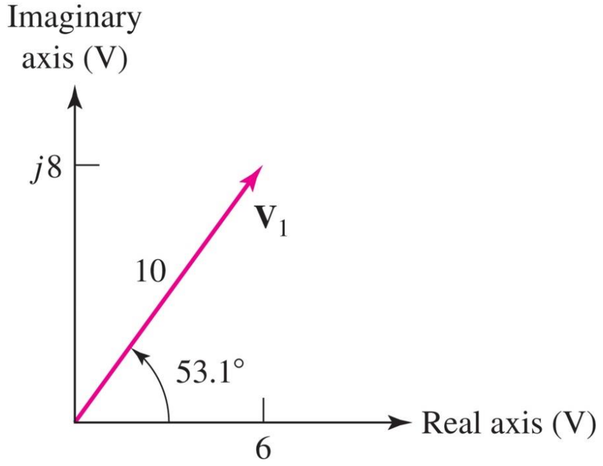

Phasor Vector Diagram: Example 1

Assuming $I = 1\measuredangle 0$:

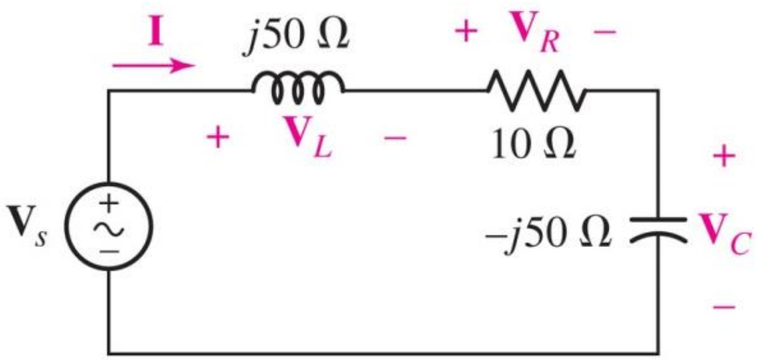

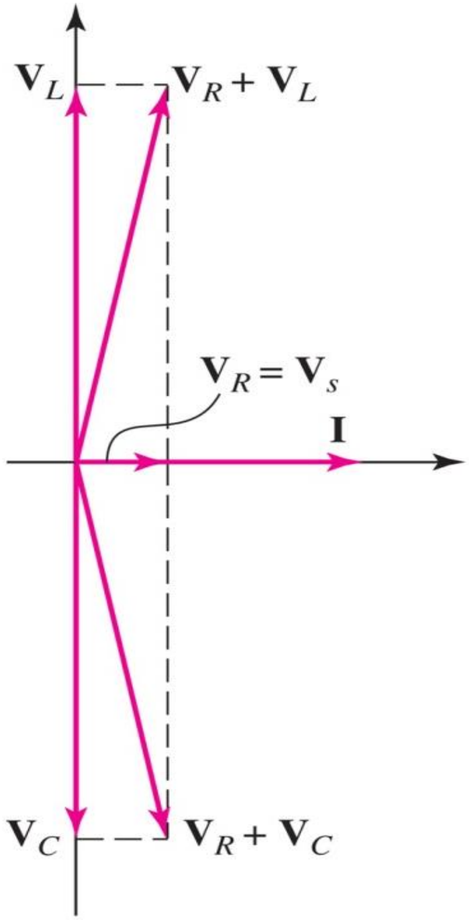

In this context, the behaviour of inductors and capacitors can be understood in terms of their phase relationships with voltage.

Phasor Vector Diagram: Example 2

Assuming $V = 1\measuredangle 0$:

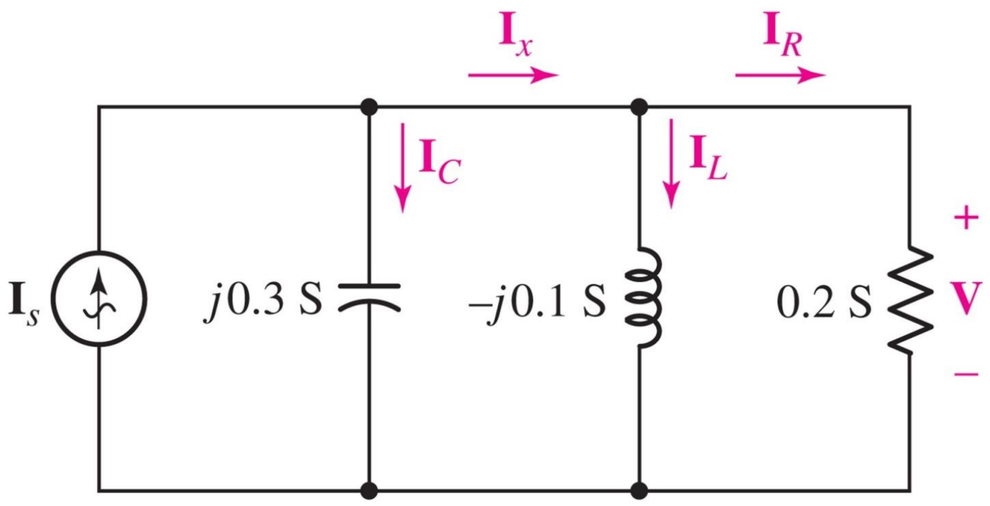

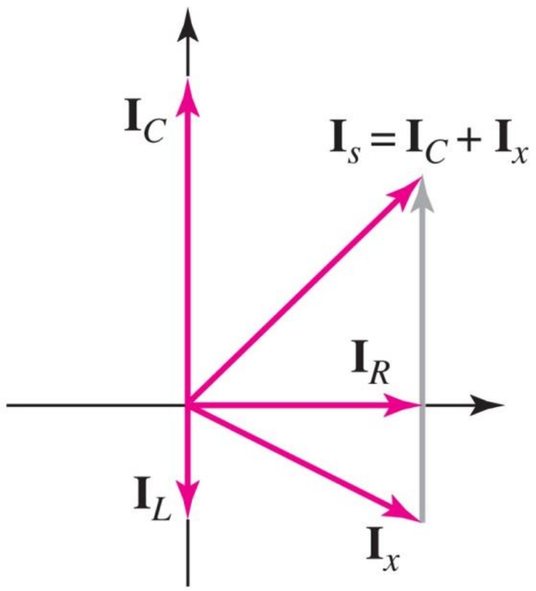

Question: What should be done if a circuit contains sources with different frequencies?

When calculating $j\omega L$ and $\frac{1}{j\omega C}$, which ω should be used?

Answer: In this case, the effect of each source must be determined separately, and the responses should be combined in the time domain (using the principle of superposition).

Important: Note that phasors corresponding to two different frequencies cannot be directly summed! They must first be transformed to the time domain and then added together.

Practice 2

Determine the power consumed by the 10-ohm resistor in the circuit shown below under steady-state conditions.

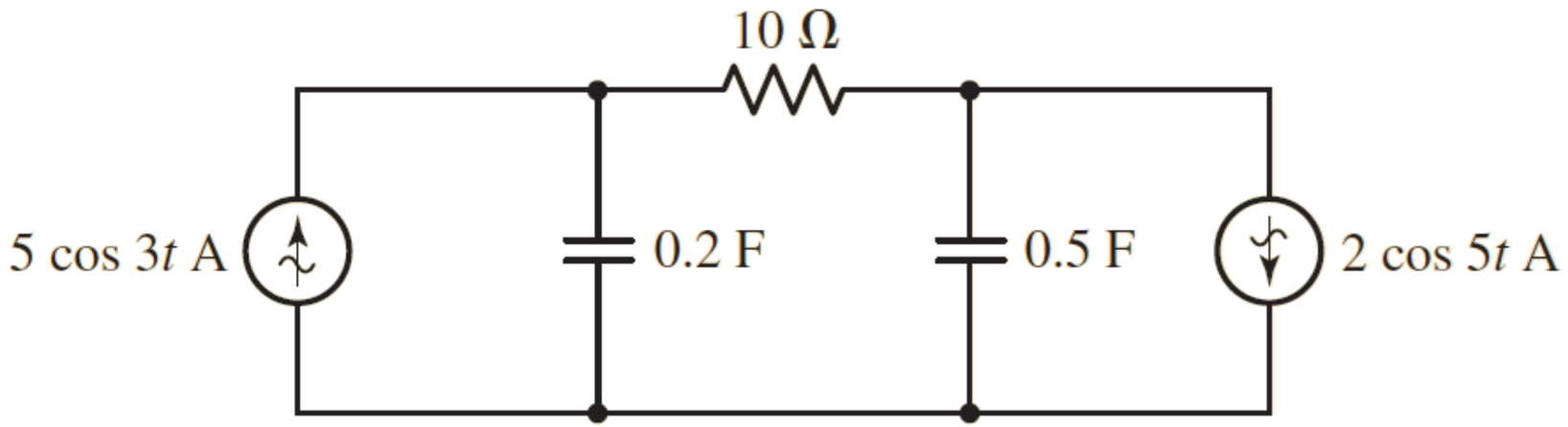

Thanks

دانشگاه صنعتی امیرکبیر
(پلی تکنیک تهران)

Electrical and Electronic Circuits

chapter 9. Frequency Response

Afarghadan@aut.ac.ir

عظیم فرقدان

مهر ۱۴۰۳

Objectives of the Lecture

- Resonance
- Frequency filter
- Describe the sinusoidal steady-state behavior of a circuit as a function of frequency.

- Resonance is a phenomenon in which an external force causes a system to oscillate with a greater amplitude.
- The frequency at which resonance occurs is called the resonance frequency.

Tacoma bridge, 1940, US

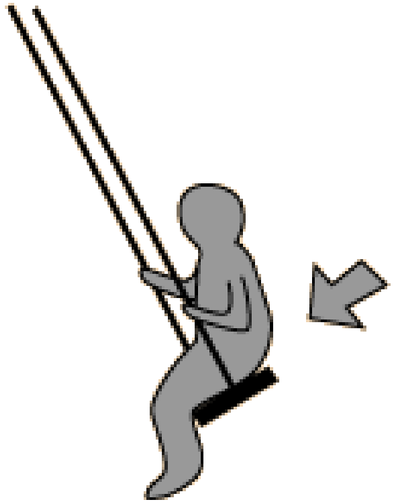

Electrical Resonance

In the circuit below, what is the frequency of the sinusoidal source so that the ratio V/I is maximized (Resonance occurs)?

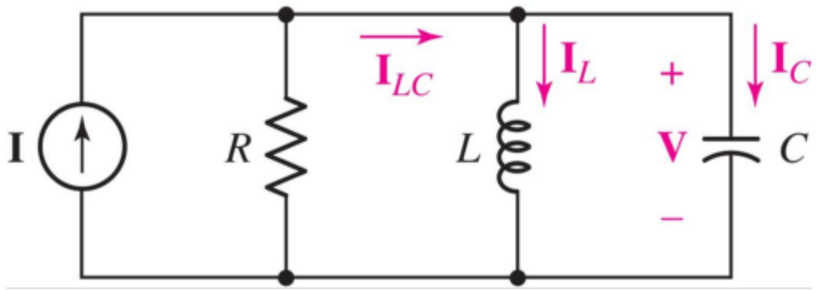

$$\frac{V}{I} = Z_{eq} = \frac{R}{1 + jR(c\omega - \frac{1}{L\omega})} \rightarrow Z_{max} = R$$

The resonance frequency is $\omega_0 = \frac{1}{\sqrt{LC}}$.

Inductor and capacitor begin to exchange energy between themselves and no longer receive energy from the source.

Electrical Resonance

- In the previous example, you observed that when resonance occurs, the imaginary part of the impedance becomes zero.

$$Z_{eq} = \frac{R}{1 + jR(c\omega - \frac{1}{L\omega})} \rightarrow Z_{max} = R$$

- This is true for all RLC circuits, meaning resonance occurs when the imaginary part of the impedance or admittance becomes zero.

- In this state, the current and voltage of the circuit become in phase (since the equivalent impedance of the circuit is a real number and behaves like a resistor).

Electrical Resonance

What is the resonance frequency in a series RLC circuit?

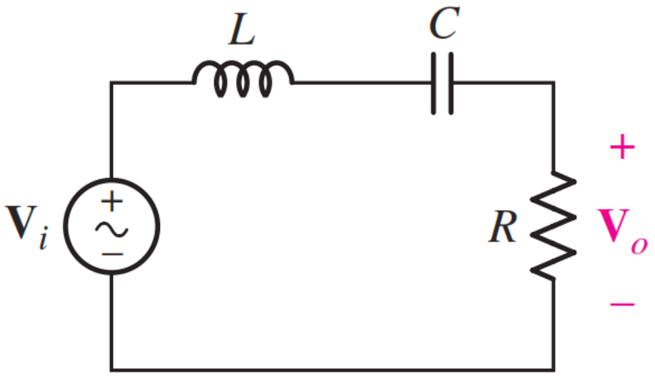

- $Z_{eq} = R + j\omega L + \frac{1}{j\omega C}$
- $Img(Z_{eq}) = 0 \rightarrow \omega_0 = \frac{1}{\sqrt{LC}}$

Frequency Response

- If we let the amplitude of the sinusoidal source remain constant and vary the frequency,
  - we obtain the circuit's frequency response.
- The frequency response of a circuit is the variation in its behavior with change in signal frequency.
- The frequency response of a circuit may also be considered as the variation of the gain and phase with frequency.

Frequency Response

In an n-order circuit with a sinusoidal input, frequency response analysis involves finding:

•The ratio of the output amplitude to the input amplitude ($\frac{I_m}{V_m}$), known as the gain A.

•The phase difference between them $(\phi - \theta)$ at various frequencies.

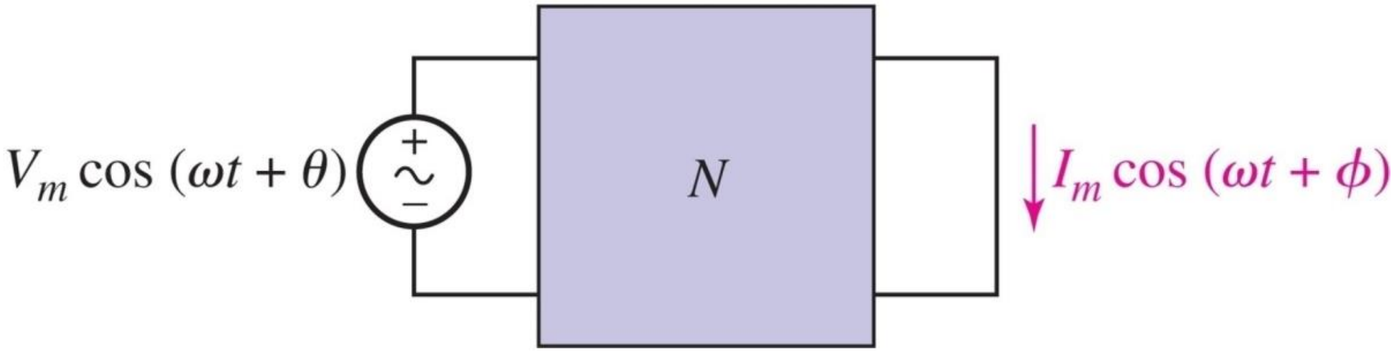

To perform this analysis, we use the transfer function.

Transfer Function

- The transfer function $\mathbf{H}(\omega)$ of a circuit is the frequency-dependent ratio of a phasor output $\mathbf{Y}(\omega)$ (an element voltage or current) to a phasor input $\mathbf{X}(\omega)$ (source voltage or current).

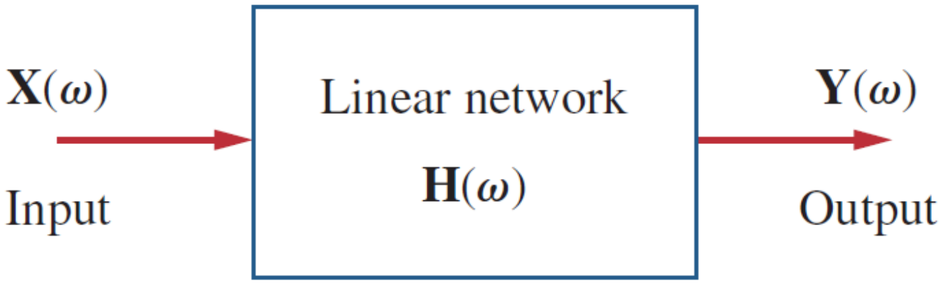

$$\mathbf{H}(\omega) = \frac{\mathbf{Y}(\omega)}{\mathbf{X}(\omega)}$$

Transfer Function

The ratio of the output phasor to the input phasor is called the transfer function, $\mathbf{H}(j\omega)$.

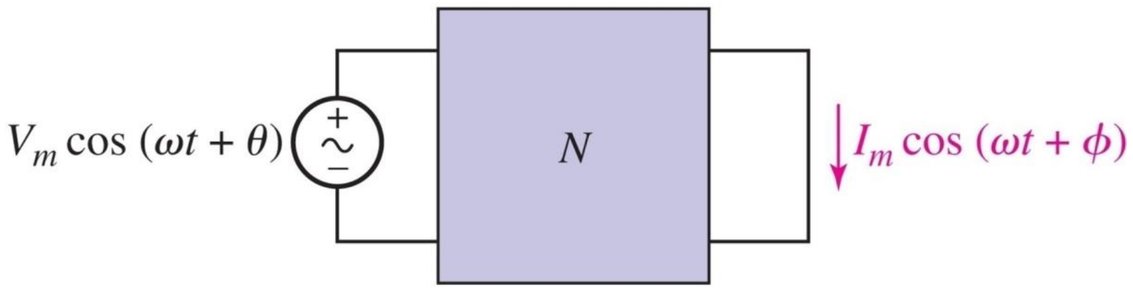

- $\mathbf{H}(j\omega) = \frac{I_m e^{j\phi}}{V_m e^{j\theta}}$
- $A = |\mathbf{H}(j\omega)| = \frac{I_m}{V_m}$
- $Phase = \measuredangle \mathbf{H}(j\omega) = \phi - \theta$

All three are functions of frequency.

Transfer Function

- Since the input and output can be either voltage or current at any place in the circuit,

  –there are four possible transfer functions:

$$\mathbf{H}(\omega) = \text{Voltage gain} = \frac{\mathbf{V}_o(\omega)}{\mathbf{V}_i(\omega)}$$

$$\mathbf{H}(\omega) = \text{Current gain} = \frac{\mathbf{I}_o(\omega)}{\mathbf{I}_i(\omega)}$$

$$\mathbf{H}(\omega) = \text{Transfer Impedance} = \frac{\mathbf{V}_o(\omega)}{\mathbf{I}_i(\omega)}$$

$$\mathbf{H}(\omega) = \text{Transfer Admittance} = \frac{\mathbf{I}_o(\omega)}{\mathbf{V}_i(\omega)}$$

A low-pass RC filter

$$V_{out} = \frac{\frac{1}{j\omega C}}{\frac{1}{j\omega C} + R} V_{in} = \frac{1}{1 + j\omega RC} V_{in}$$

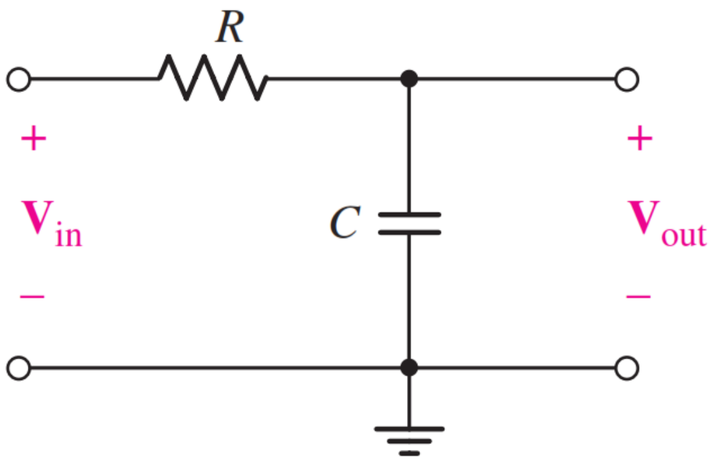

Assuming the capacitor voltage as the circuit output, the transfer function is given by:

$$\mathbf{H}(j\omega) = \frac{V_{out}}{V_{in}} = \frac{1}{1 + j\omega RC}$$

Bode Diagram

A Bode diagram is a plot that shows the magnitude and phase of the transfer function as a function of frequency on a logarithmic scale.

- ✓ The horizontal axis represents frequency, plotted on a logarithmic scale.
- ✓ The vertical axis of the magnitude plot represents the gain in decibels (dB).
- ✓ The vertical axis of the phase plot represents the phase angle on a linear scale.

This diagram is useful for analyzing the frequency response of a system, showing how both the amplitude and phase of the output signal vary with changes in input frequency.

$$H_{dB} = 20\log\left|\mathbf{H}(j\omega)\right|$$

The Bode diagram for an RC low-pass filter

- $\mathbf{H}(j\omega) = \frac{V_{out}}{V_{in}} = \frac{1}{1+j\omega RC}$
- $|\mathbf{H}(j\omega)| = \frac{1}{\sqrt{1+\omega^2 R^2 C^2}}$
- $\measuredangle \mathbf{H}(j\omega) = -\tan^{-1} \omega RC$

The **cutoff frequency** is the frequency at which the magnitude of the transfer function drops to $\frac{1}{\sqrt{2}}$ of its maximum value. This corresponds to a -3 dB, point on the magnitude plot.

- $f_c = \frac{1}{2\pi RC}$

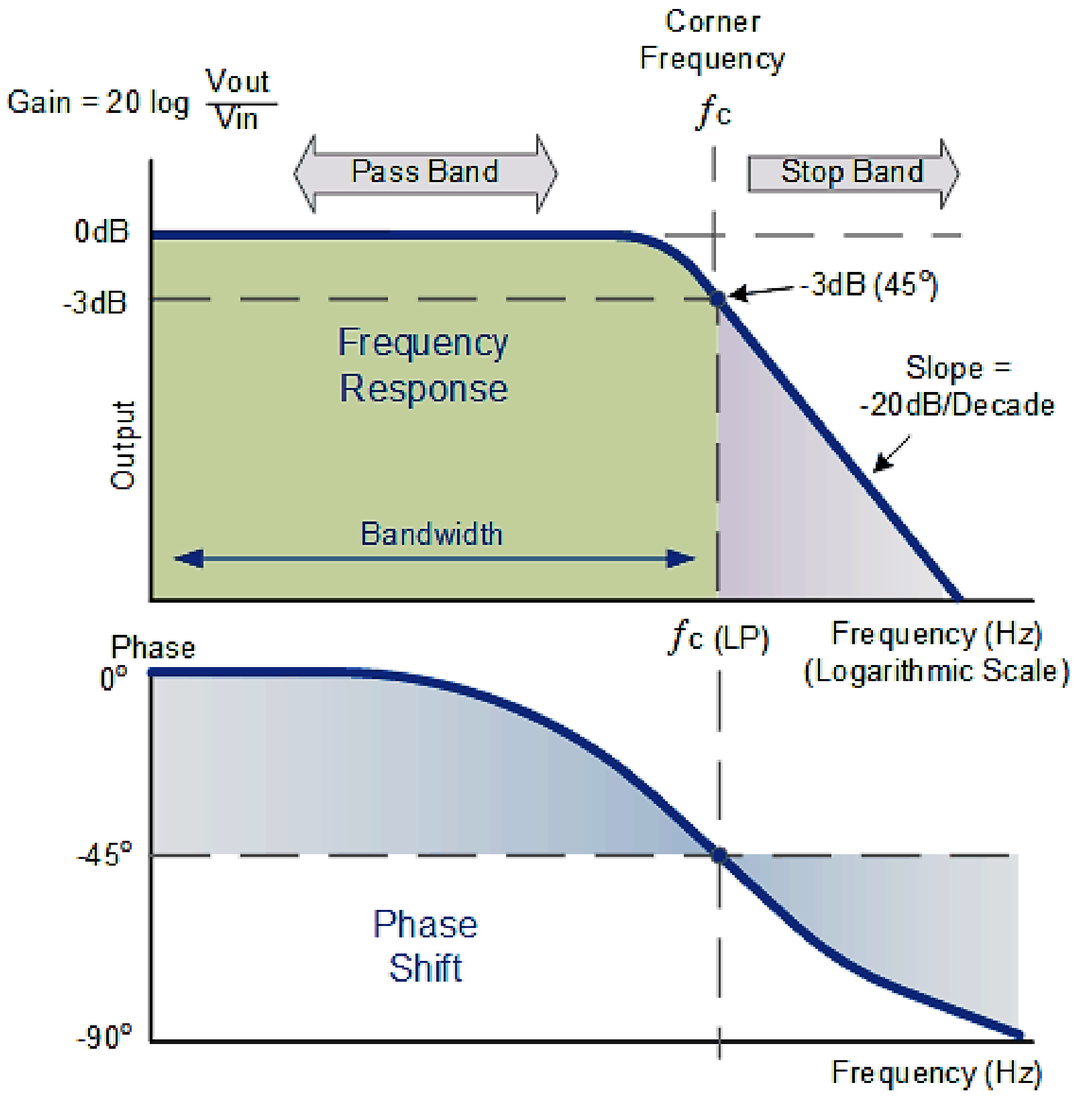

RC high-pass filter

$$V_{out} = \frac{R}{\frac{1}{j\omega C} + R} V_{in} = \frac{j\omega RC}{1 + j\omega RC} V_{in}$$

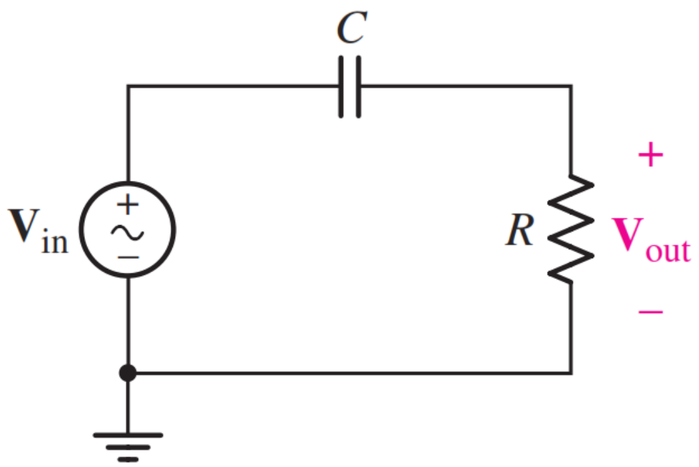

- Transfer function

$$\mathbf{H}(j\omega) = \frac{V_{out}}{V_{in}} = \frac{j\omega RC}{1 + j\omega RC}$$

The Bode diagram for an RC high-pass filter

- $\mathbf{H}(j\omega) = \frac{V_{out}}{V_{in}} = \frac{j\omega RC}{1+j\omega RC}$
- $|\mathbf{H}(j\omega)| = \frac{\omega RC}{\sqrt{1+\omega^2 R^2 C^2}}$
- $\measuredangle \mathbf{H}(j\omega) = \frac{\pi}{2} - \tan^{-1} \omega RC$

- $f_c = \frac{1}{2\pi RC}$

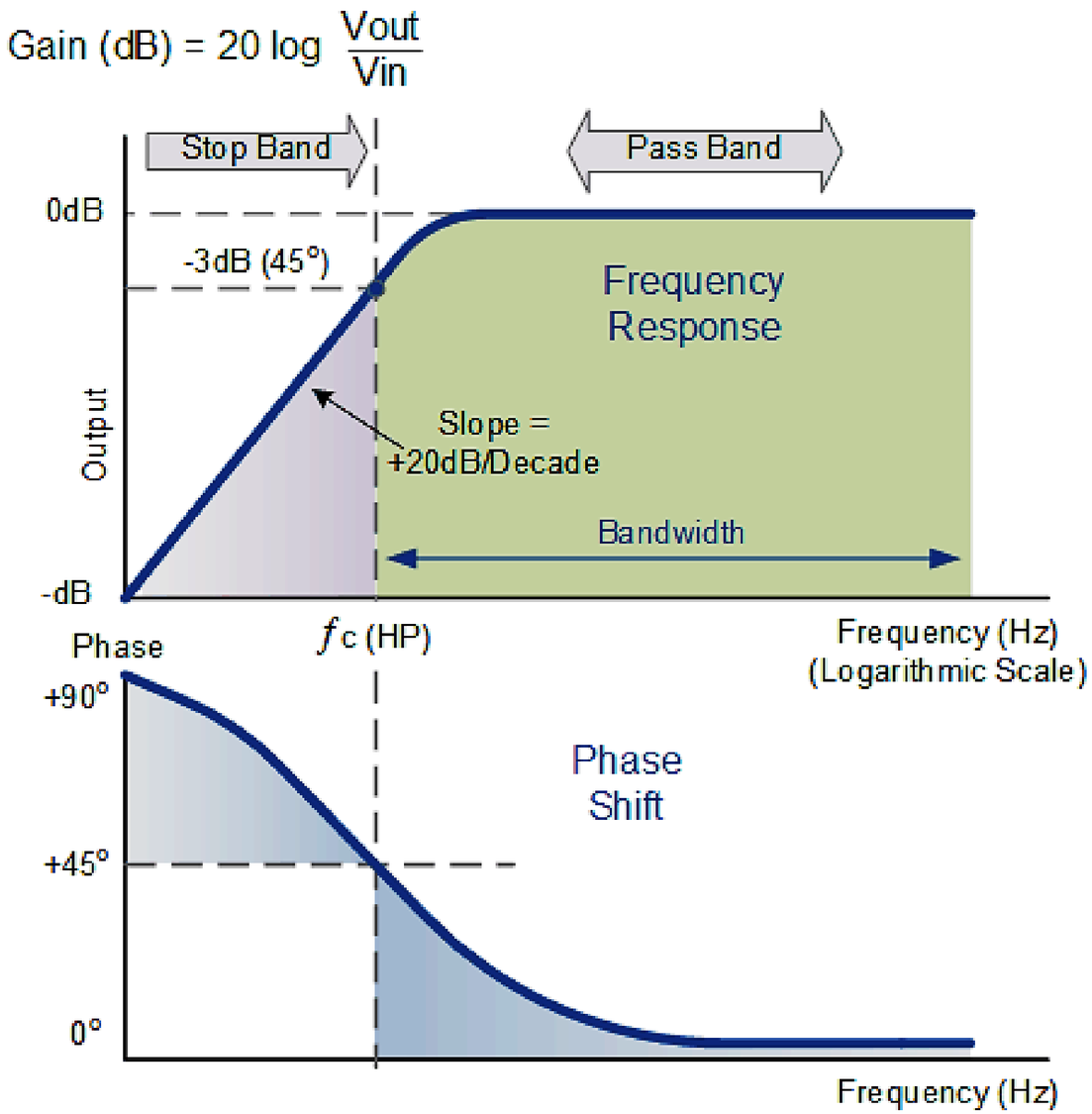

Band-Pass RLC Filter

$$V_{out} = \frac{R}{j\omega L + \frac{1}{j\omega C} + R} V_{in}$$

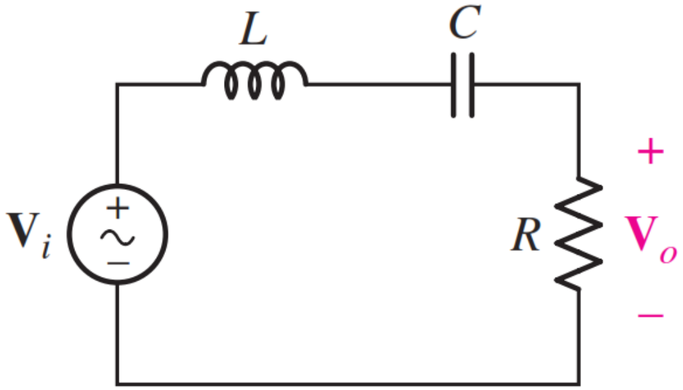

- Transfer function

$$\mathbf{H}(j\omega) = \frac{V_{out}}{V_{in}} = \frac{j\omega RC}{1 + j\omega RC - \omega^2 LC}$$

- $\mathbf{H}(j\omega) = \frac{V_{out}}{V_{in}} = \frac{j\omega RC}{1+j\omega RC-\omega^2 LC}$
- $|\mathbf{H}(j\omega)| = \frac{\omega RC}{\sqrt{(1-\omega^2 LC)^2+\omega^2 R^2 C^2}}$
- $\measuredangle \mathbf{H}(j\omega) = \frac{\pi}{2} - \tan^{-1}\frac{\omega RC}{1-\omega^2 LC}$

- Find the cutoff frequencies f_L and f_H.
- Bandwidth: the distance between the two frequencies.

- $BW = 2\pi(f_H - f_L)$

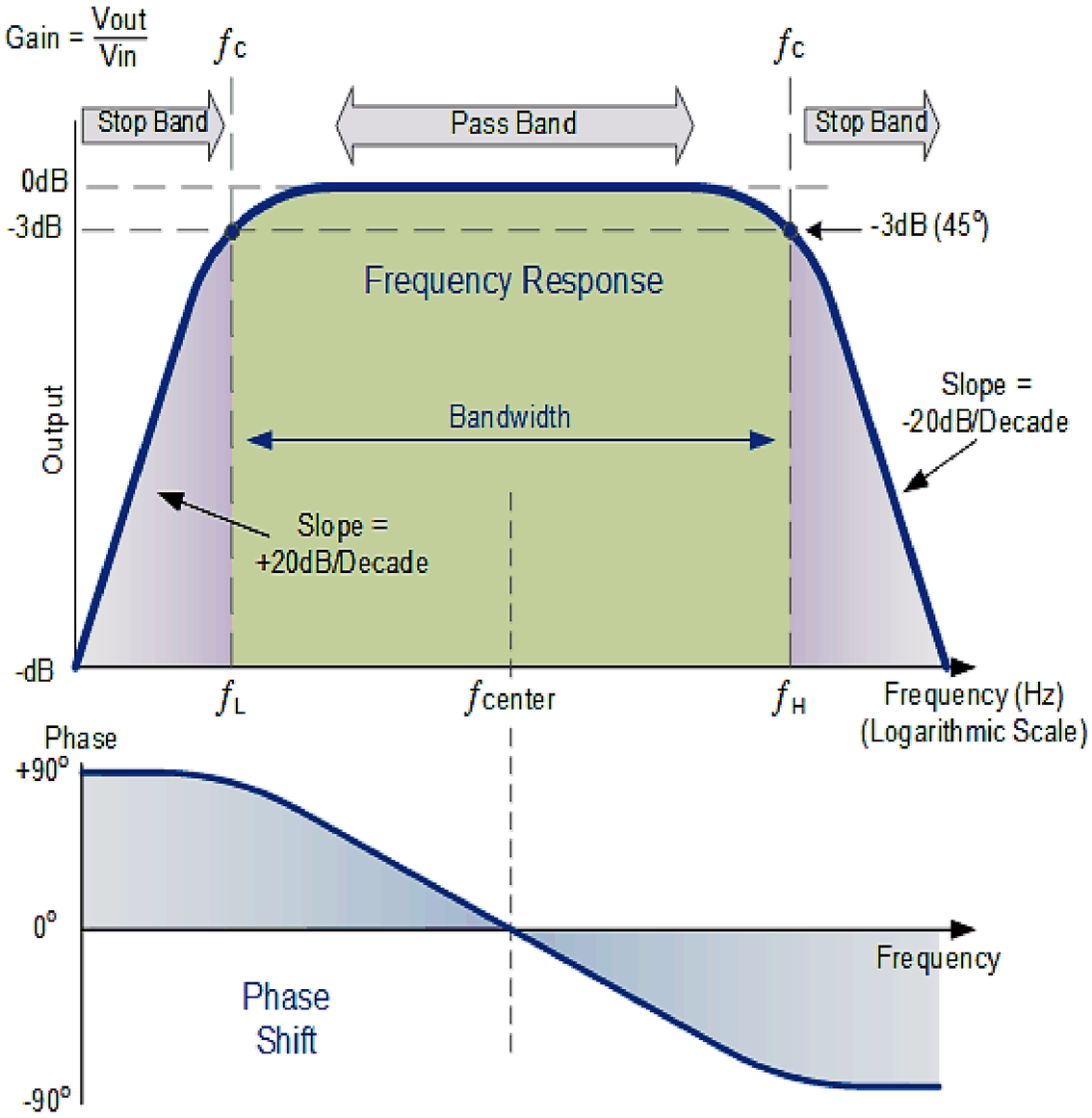

Thanks

دانشگاه صنعتی امیرکبیر
(پلی تکنیک تهران)

Electrical and Electronic Circuits

chapter 10. Diodes

Afarghadan@aut.ac.ir

عظیم فرقدان

مهر ۱۴۰۳

Objectives of the Lecture

- Introduction to Diodes and Their Applications
- Voltage-Current Characteristics of Diodes and Their Models
- Analysis of Diode Circuits

semiconductor

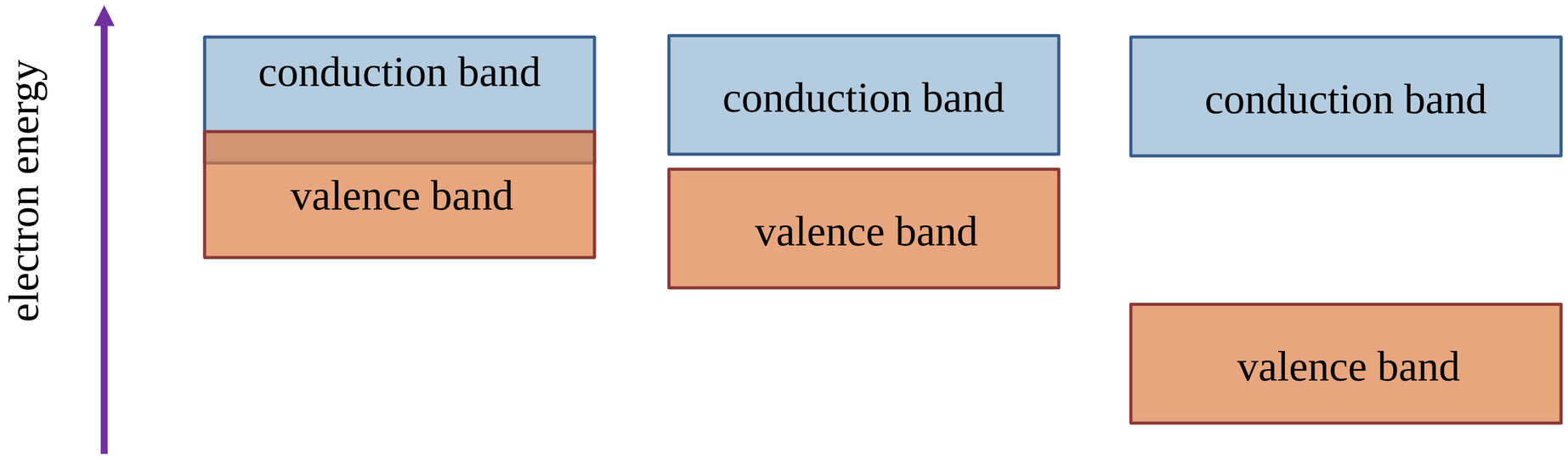

conductor
like **copper, silver, gold, aluminum,** etc.

Semiconductor
like **silicon, germanium,** etc.

Insulator
like **glass, ceramic, wood, plastic,** etc.

Silicon as a Semiconductor

- **Atomic Structure**
  - Contains 4 electrons in the valence shell

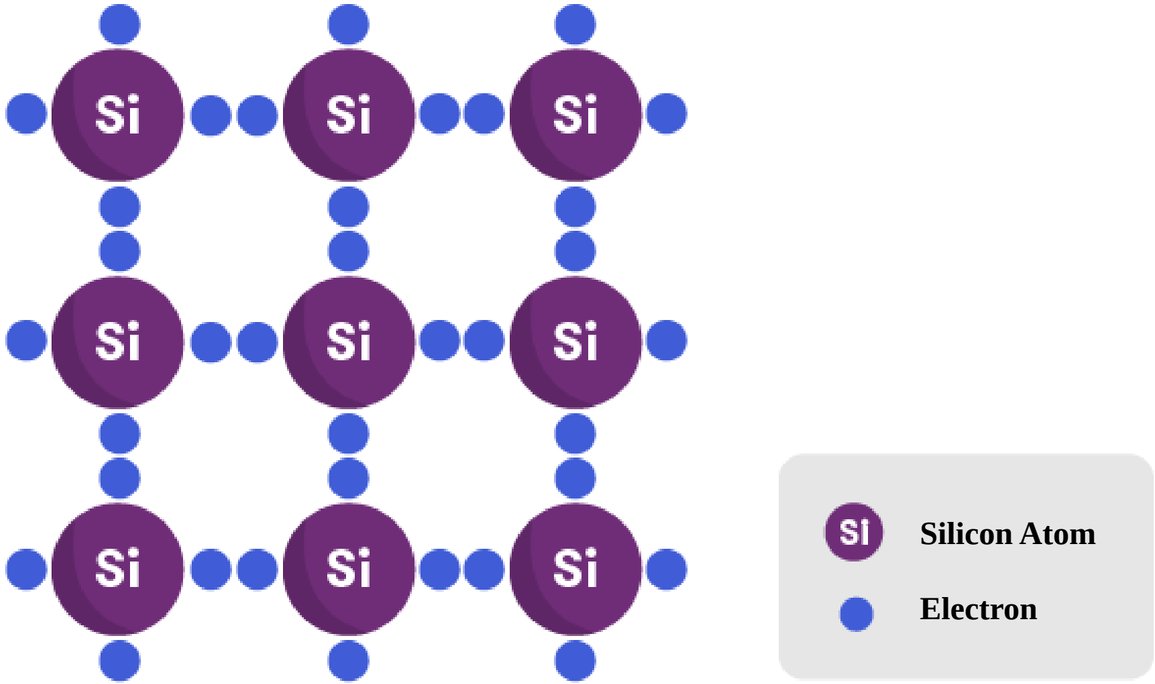

N-Type Semiconductor

- ✓ In an **N-type semiconductor**, several phosphorus atoms replace silicon atoms.
- ✓ A phosphorus atom has **5 electrons in its valence shell**, so one electron can move freely.

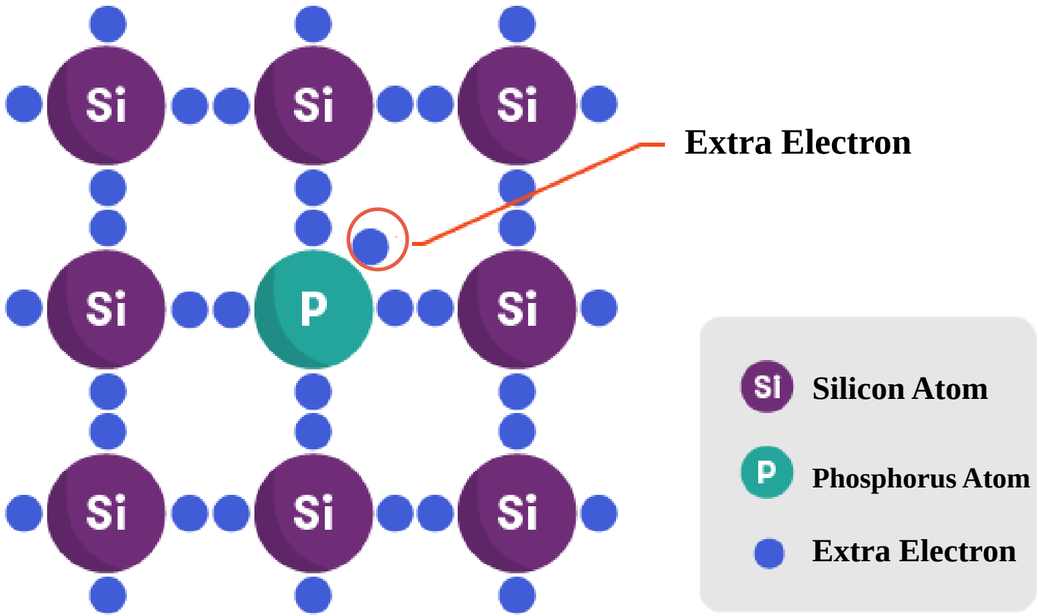

P-type semiconductor

- ✓ In a p-type semiconductor, some boron atoms are substituted for silicon atoms.
- ✓ A boron atom has 3 electrons in its valence shell, resulting in a vacancy for one electron.

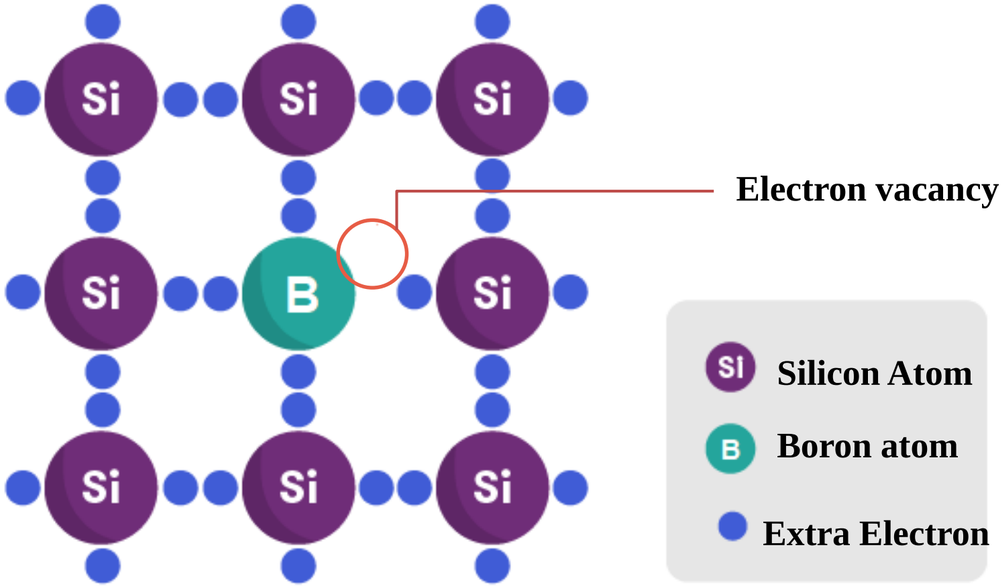

Diode

- A PN diode is a device formed by the junction of p-type and n-type semiconductors.

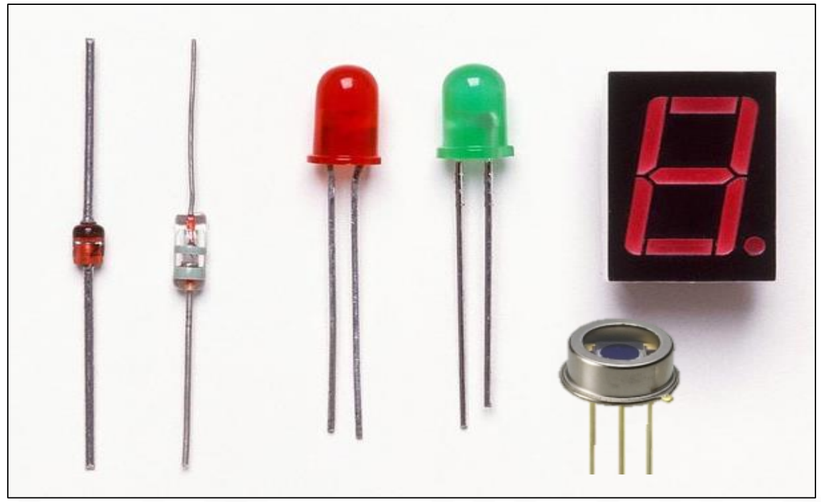

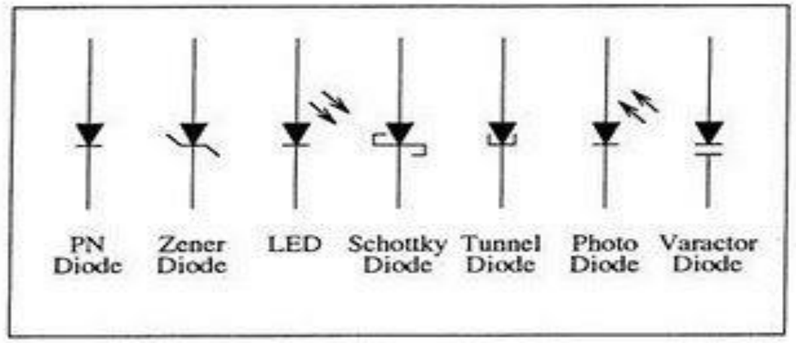

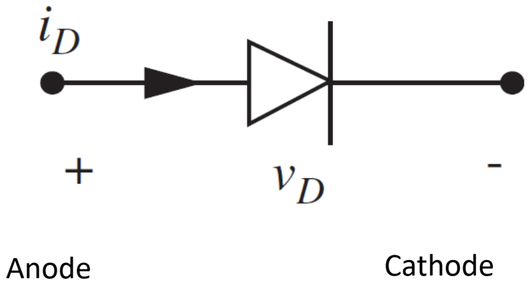

Applications of Diodes

➢Rectifier Circuit

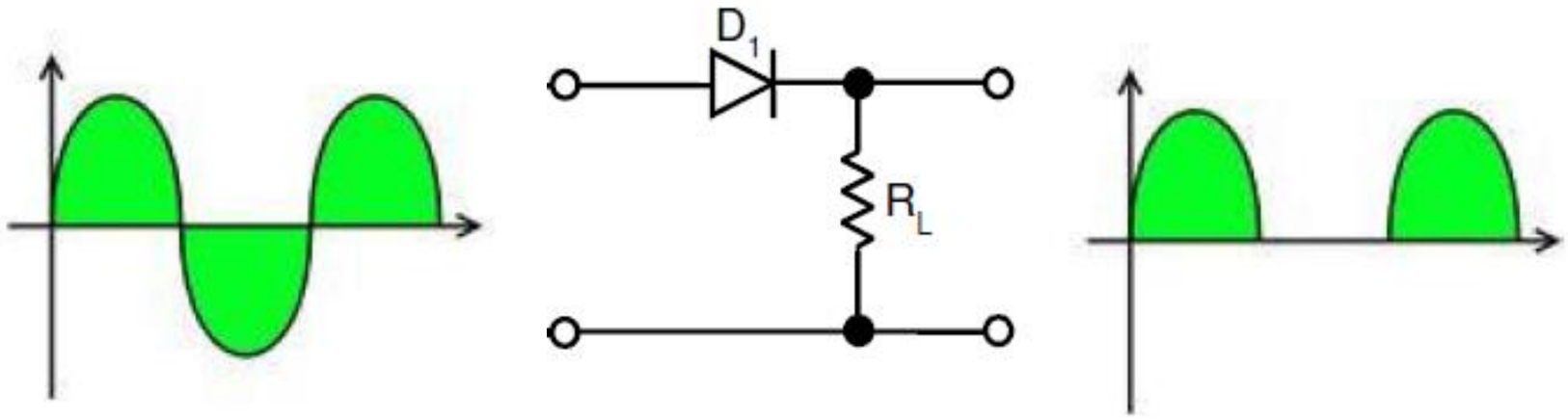

Applications of Diodes

➢Peak detector

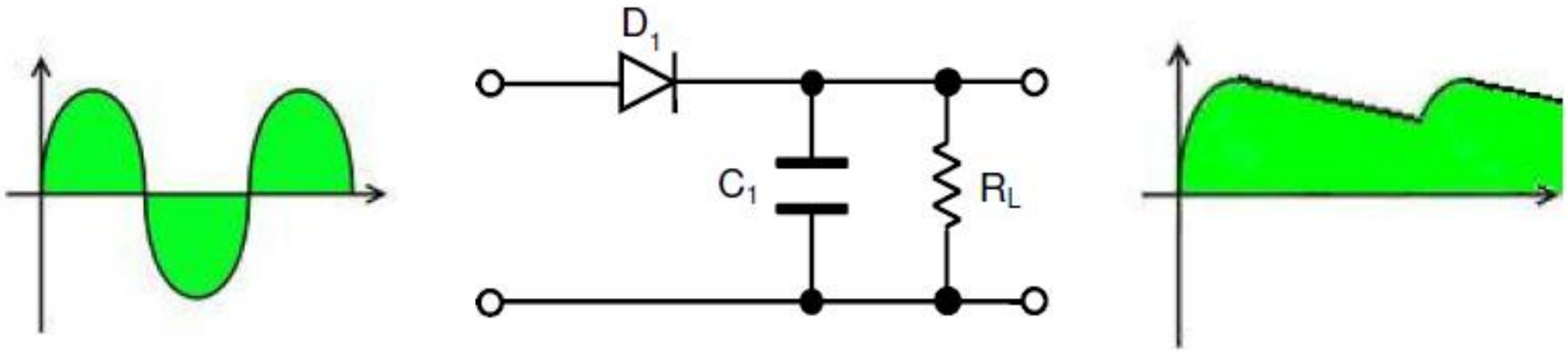

Example: For converting an AC wave to DC.

Applications of Diodes

➢Clamper Circuit

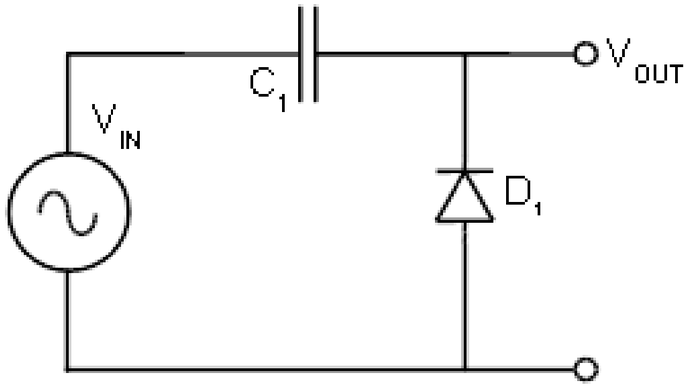

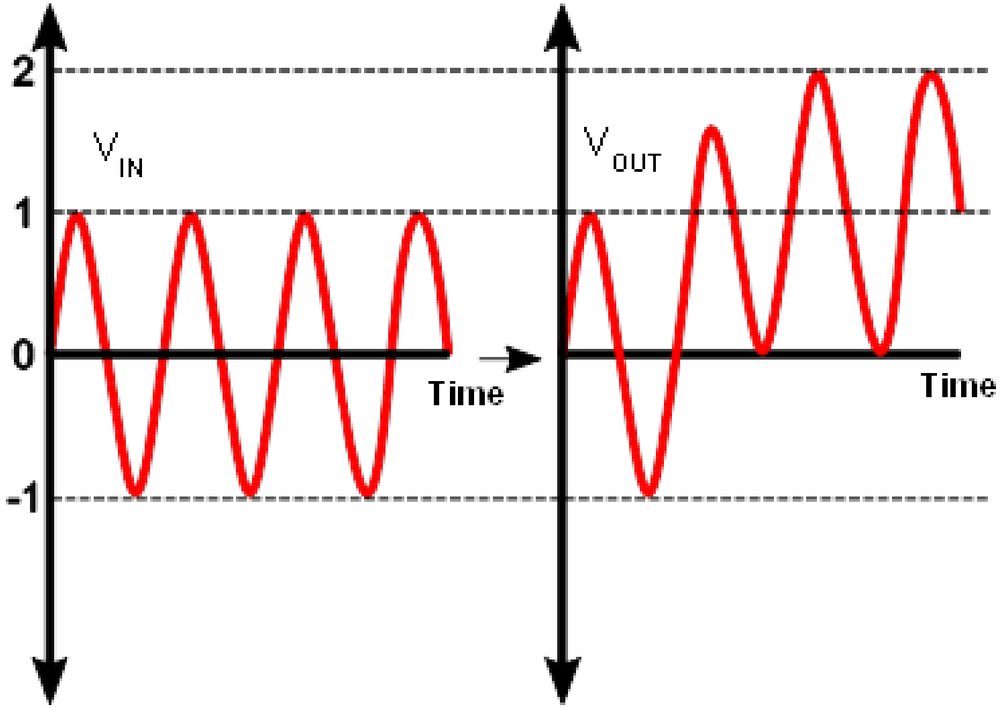

Example: For voltage multiplication.

Applications of Diodes

- Clipper/Limiter Circuit

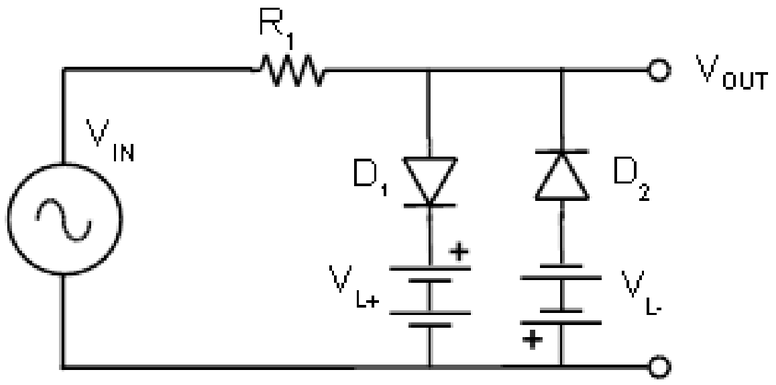

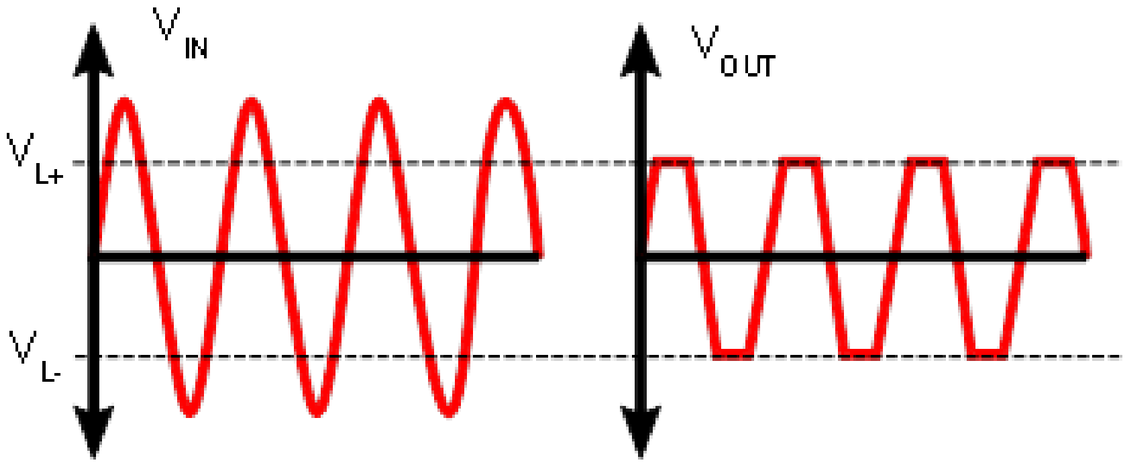

Example: For removing noise spikes.

Applications of Diodes

➢Voltage Regulator

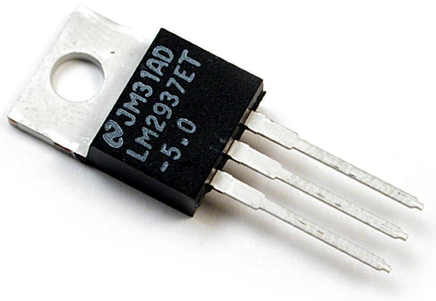

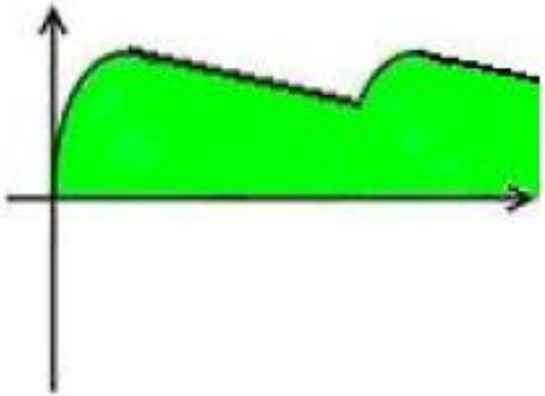

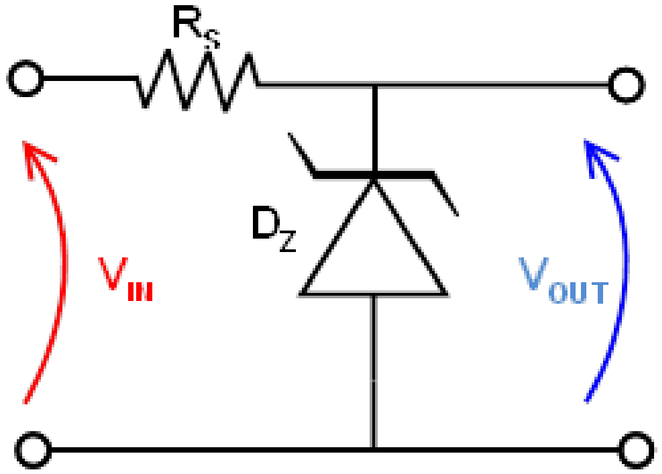

Applications of Diodes

- Infrared Transmitter/Receiver

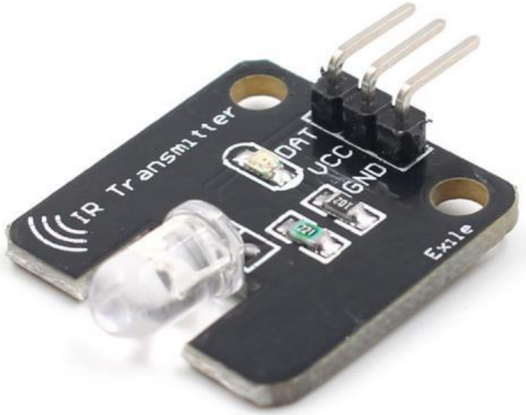

Light Emitting

Diode (LED)

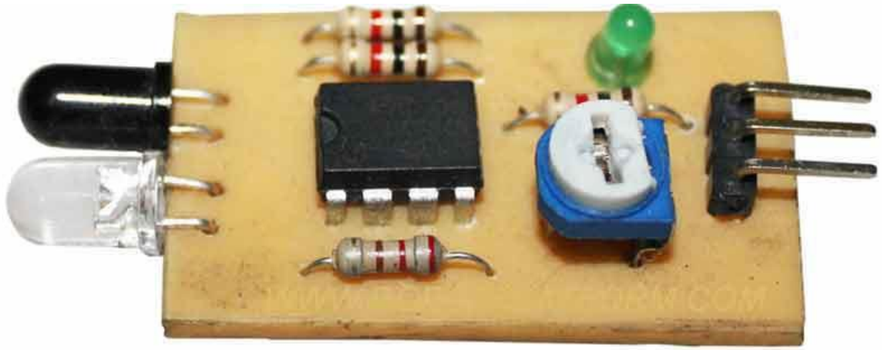

IR SENSOR (TRANSCEIVER)

Applications of Diodes

➢For constructing logic gates.

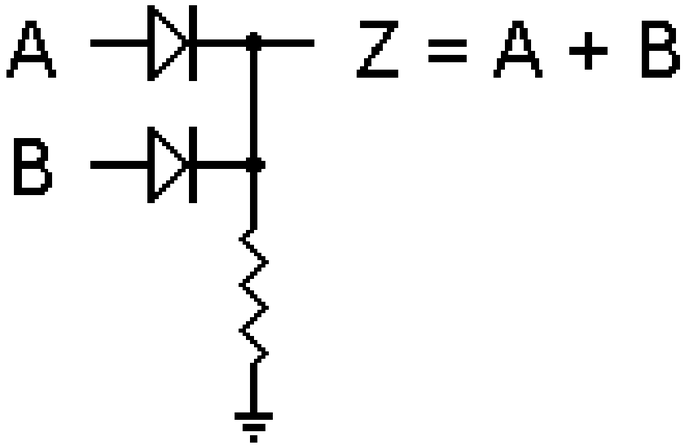

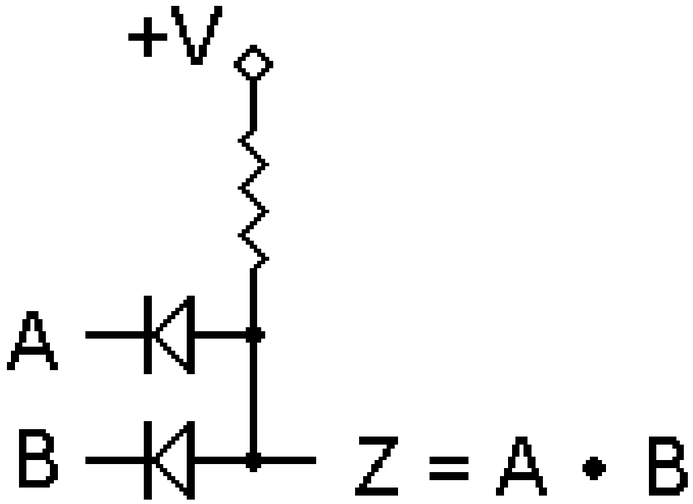

Voltage-Current Characteristic

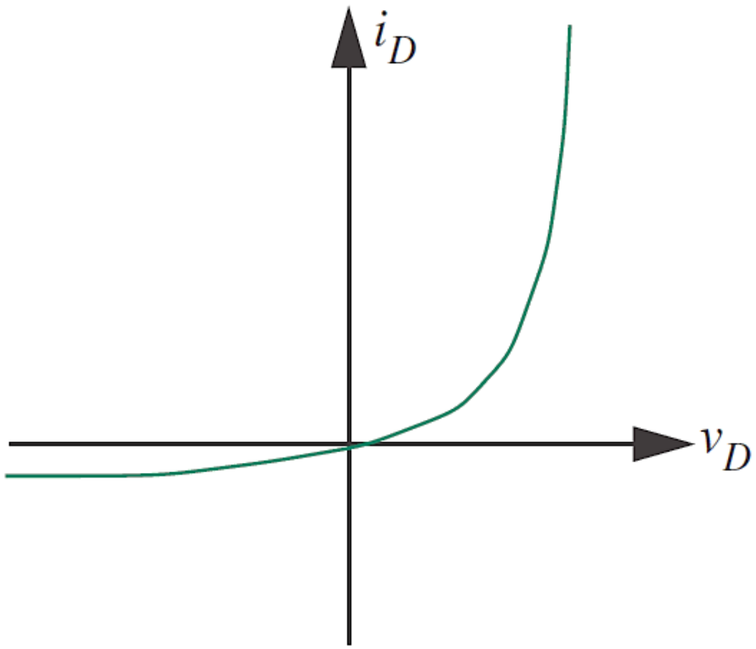

PN Diode

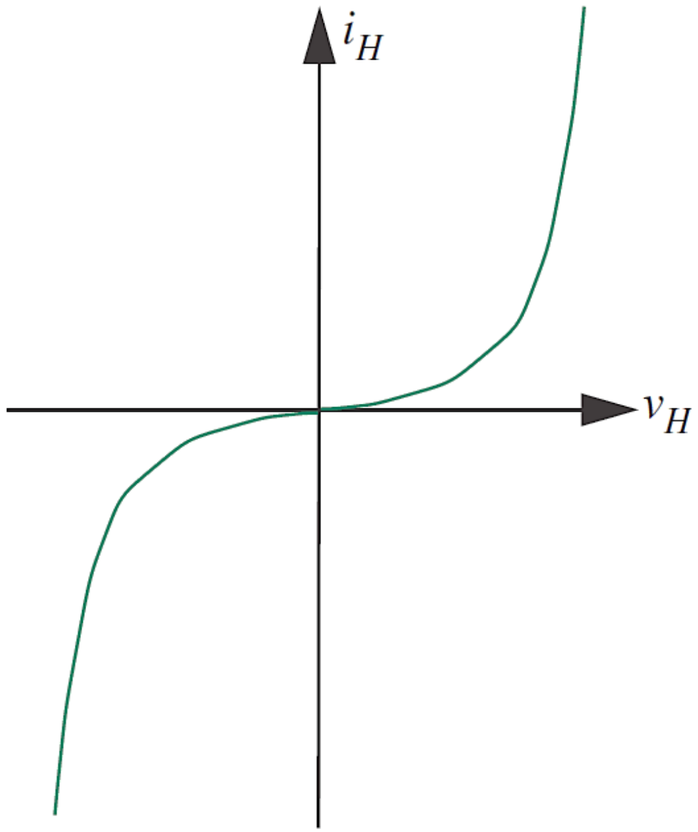

Zener Diode

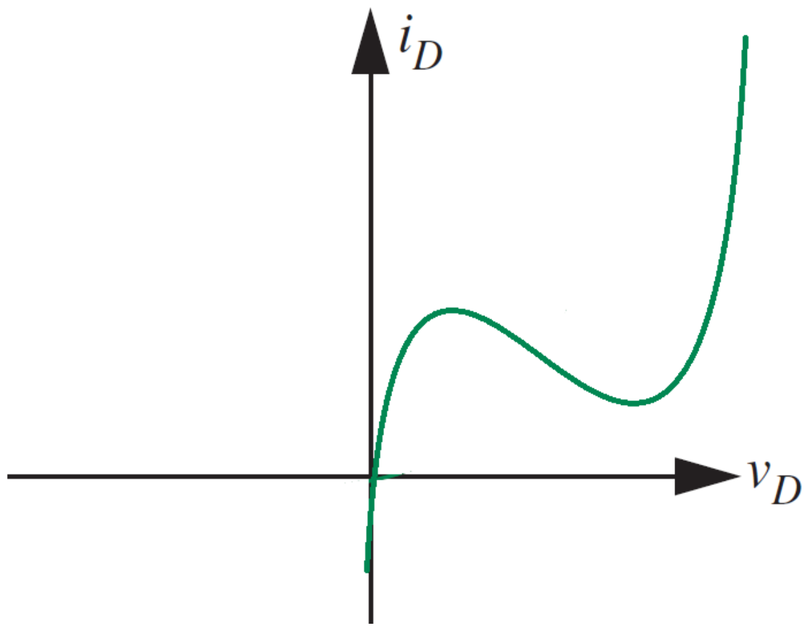

Tunnel Diode

Diode Models

❖Exact Model

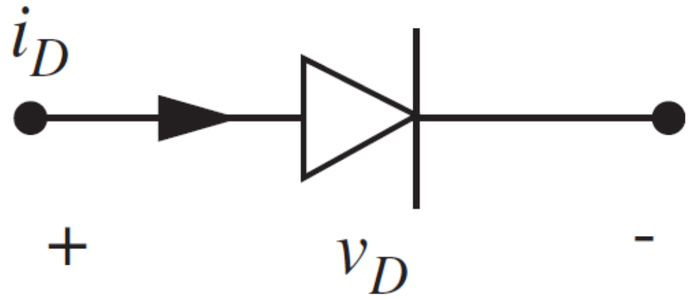

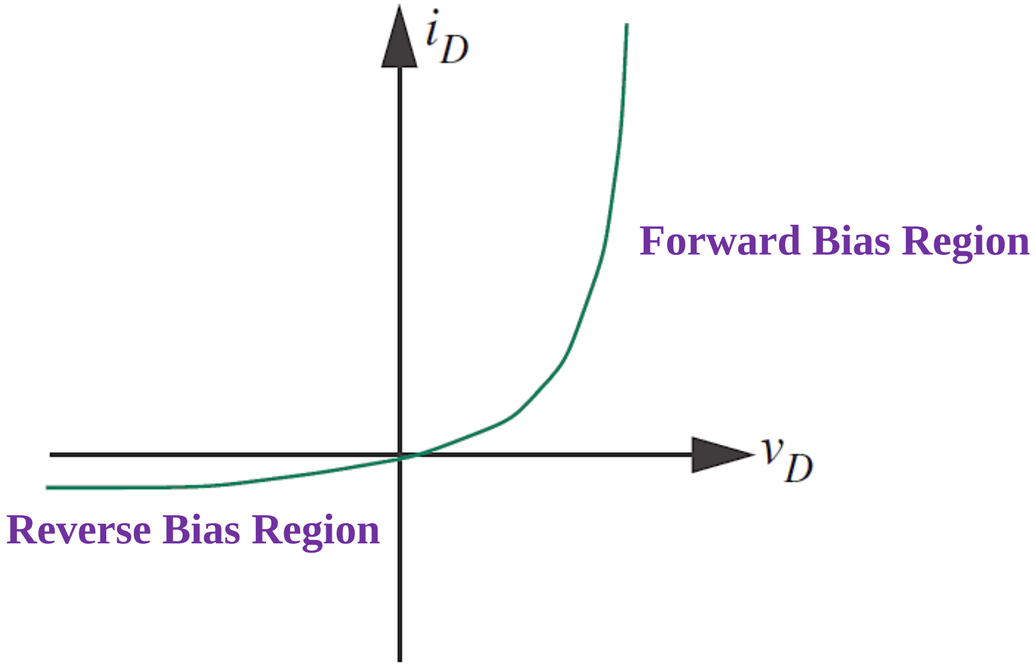

$$i_D = I_s(e^{v_D/v_T} - 1)$$

Saturation Current ≈ 10^{-12}

Thermal Voltage ≈ 25mv

Example

- Find the values of iD and vD.

  By applying Kirchhoff's Voltage Law (KVL), we have:

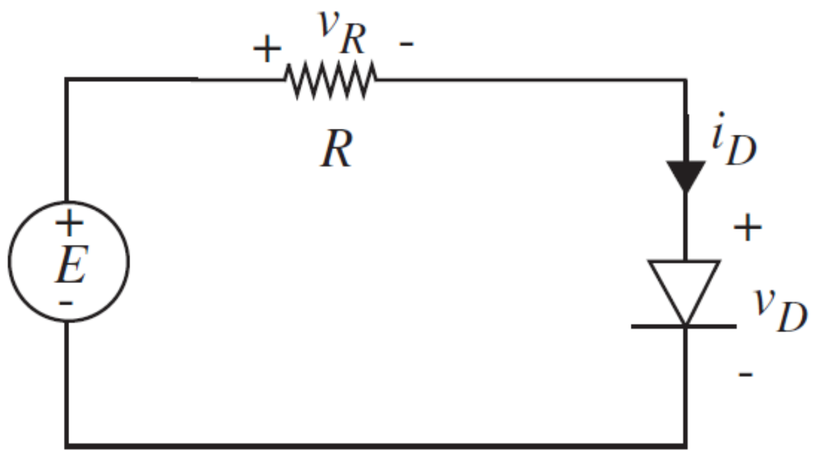

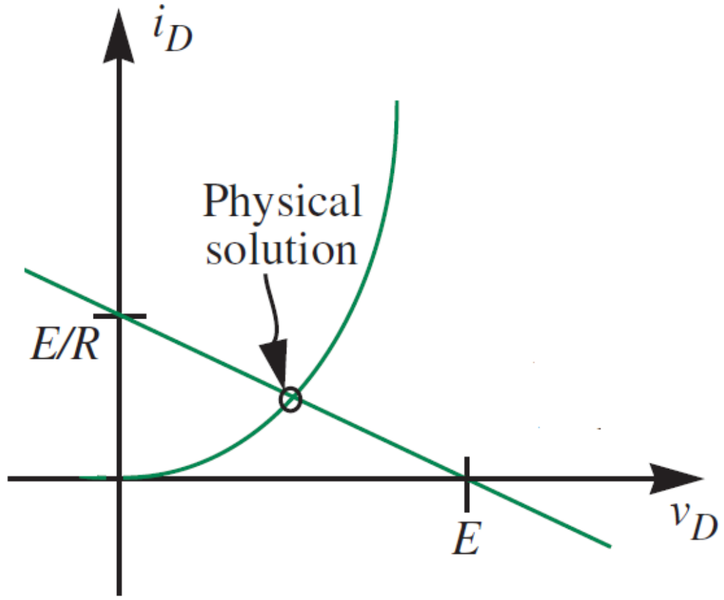

$$-E + Ri_D + v_D = 0$$

$$i_D = I_s(e^{v_D/v_T} - 1)$$

- ✓ The exact model complicates the analysis.
- ✓ Simpler models are needed.

Diode Models

➢ Ideal Model

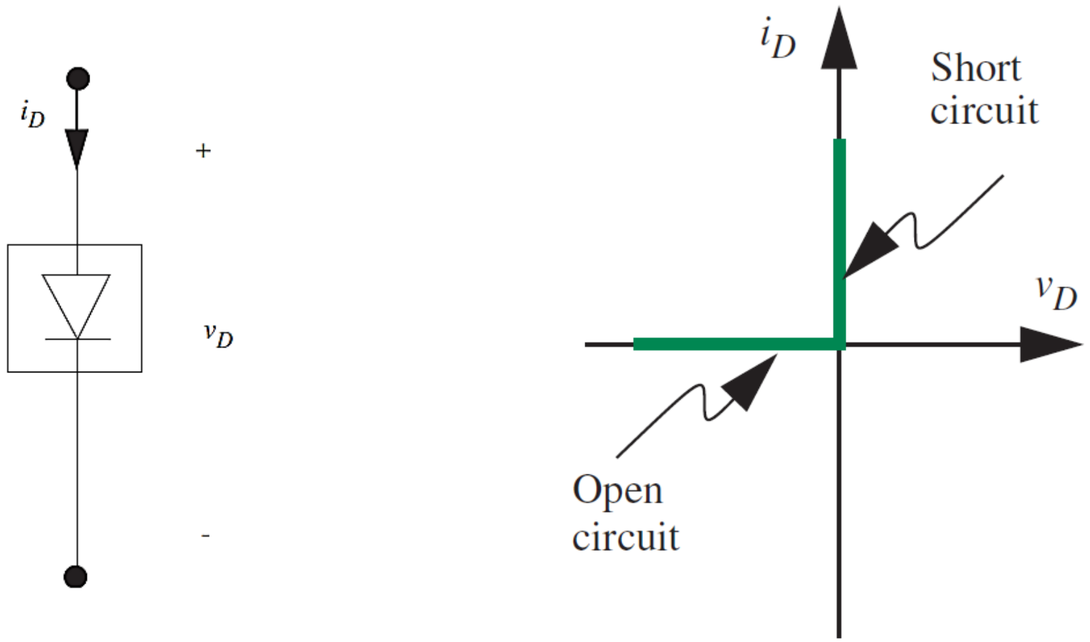

✓The diode is always in one of the two following states:

✓**On**: $(v_D = 0, i_D > 0)$ In this case, the diode behaves as a short circuit.

✓**Off**: $(i_D = 0, v_D < 0)$ In this case, the diode behaves as an open circuit.

Diode Models

➢Piecewise Linear

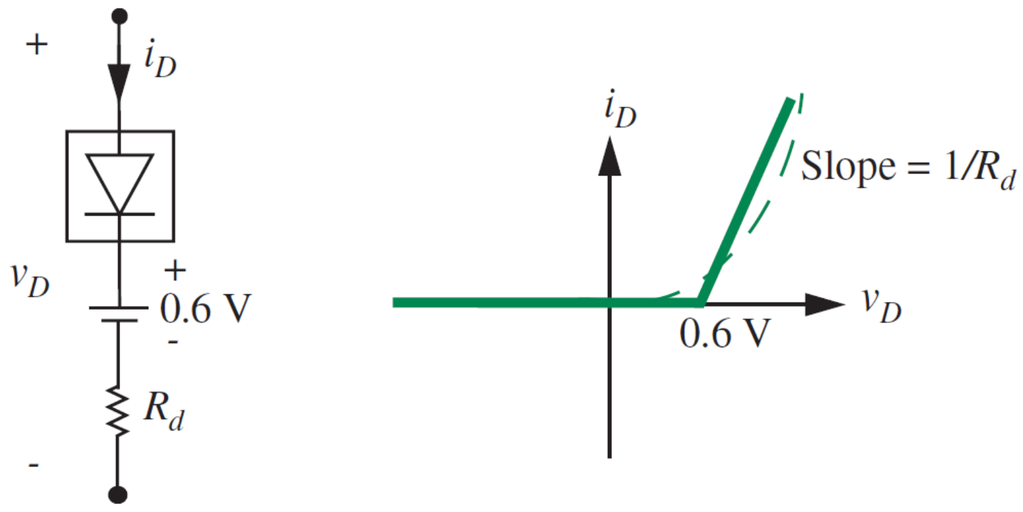

Threshold Voltage (v_{TH})

- ✓ The diode is always in one of the two following states:
- ✓ **On**: $v_D = RdiD + 0.6, \quad v_D > 0.6\,, \quad i_D > 0$
- ✓ **Off**: $i_D = 0, \quad v_D < 0.6$

Analysis of Diode Circuits

❖ Hypothetical Method

1. **For each diode, assume it is either on or off.**
   - ✓ For each assumption, draw the corresponding circuit (there will be 2^N possible states for N diodes).
2. **Analyze one of the circuits**:
   - ✓ Select one circuit and perform the analysis based on the given assumptions.
3. **Check the validity of assumptions**:
   - ✓ If the diode is assumed to be off, its voltage should be negative.
   - ✓ If the diode is assumed to be on, its current should be positive.
4. **Final verification**:
   - ✓ If all assumptions are correct, the analysis is complete.
   - ✓ If any assumption is incorrect, revisit and check the assumption again (repeat step 2).

Example 1

Assume the Diode is Ideal, Find the Voltage v

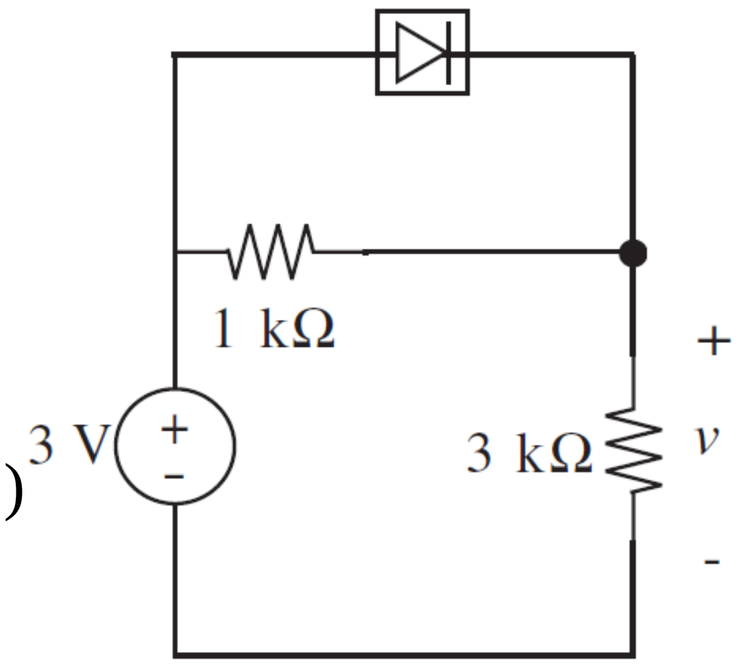

Assume the Diode is Off (Open Circuit)

- ✓ $i_D = 0,\ v_D < 0$
- ✓ $v_D = 0.75V$ (The diode voltage is positive. **Contradiction!**)

Assume the Diode is On (Short Circuit)

- ✓ $v_D = 0,\ i_D > 0$
- ✓ $i_D = 1mA \rightarrow v = 3V$ (The diode current is positive. **Correct.**)

Example 2

Assuming a piecewise-linear model, determine the voltage v.

- ✓ $R_d = 1,\ v_{TH} = 0.6$

Assume the diode is off (open circuit):

- ✓ $i_D = 0,\ v_D < 0.6$
- ✓ $v_D = 0.75V$ **(The diode voltage is positive. Contradiction!)**

Assume the diode is on (short circuit):

- ✓ $v_D = iD + 0.6,\ i_D > 0,\ v_D > 0.6$
- ✓ $i_D \approx 0.2mA \rightarrow v \approx 2.4V$ **(The diode current is positive. Correct.)**

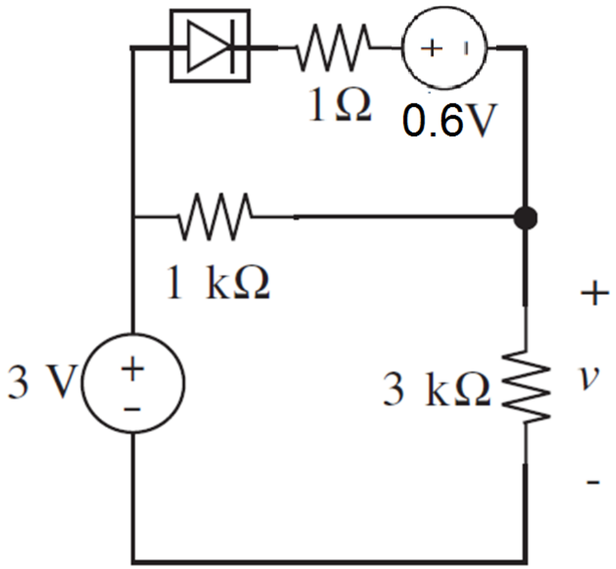

Example 3

- Plot the output voltage v_{OUT} as a function of the input voltage v_{IN}.
- Four cases can be considered:
  - ✓ D_1 ON, D_2 ON
  - ✓ D_1 ON, D_2 OFF
  - ✓ D_1 OFF, D_2 ON
  - ✓ D_1 OFF, D_2 OFF
- Can you guess the correct case?
  - ✓ If $v_{IN} > 0$
  - ✓ If $v_{IN} < 0$

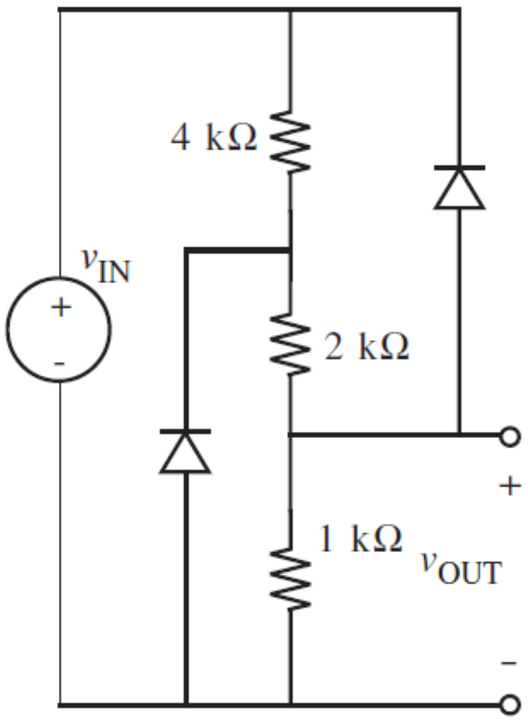

Example 4

- Rectifier

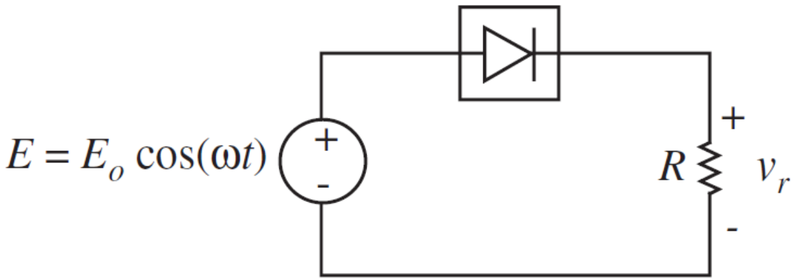

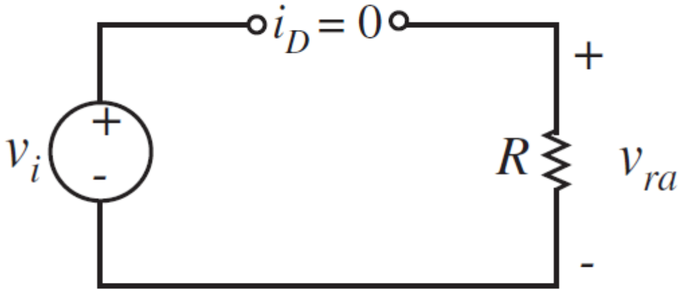

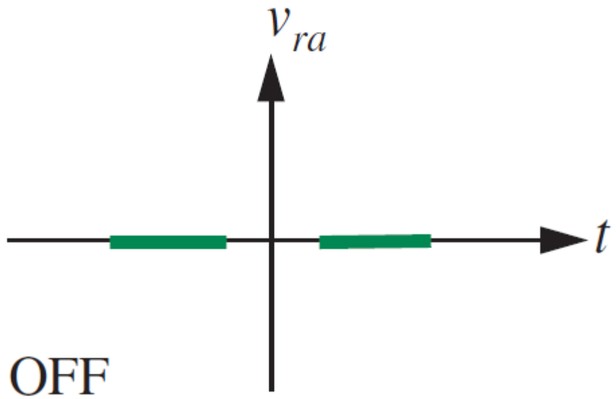

(a) Diode OFF

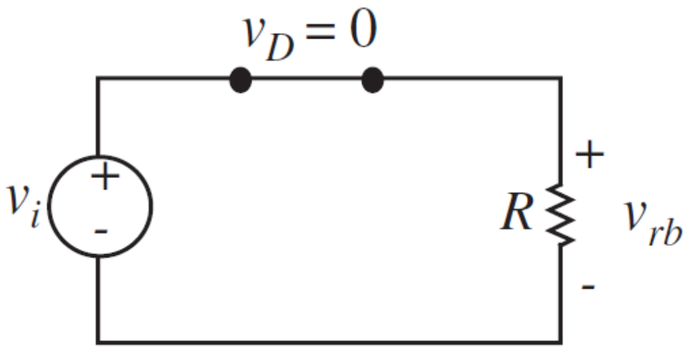

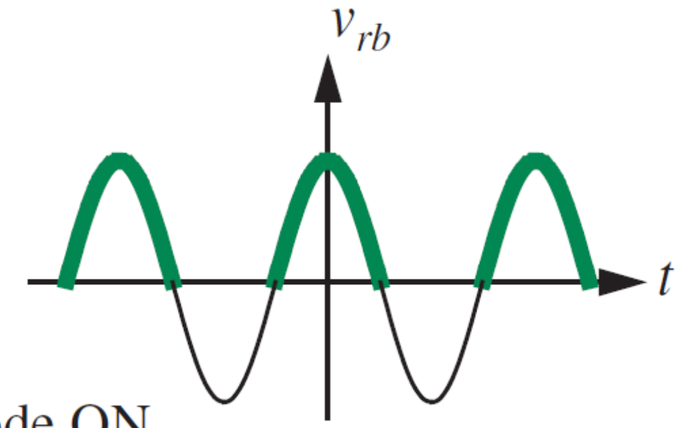

(b) Diode ON

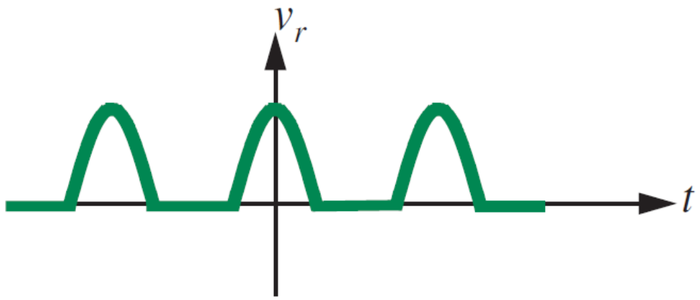

Example 5

- Rectifier

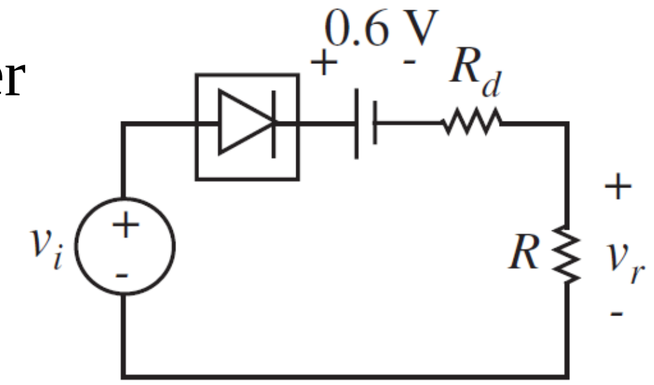

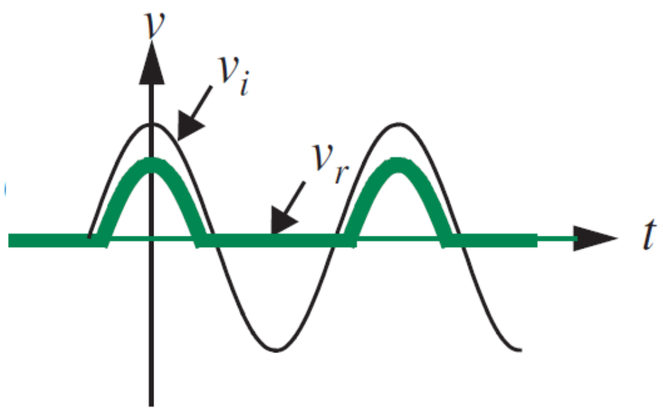

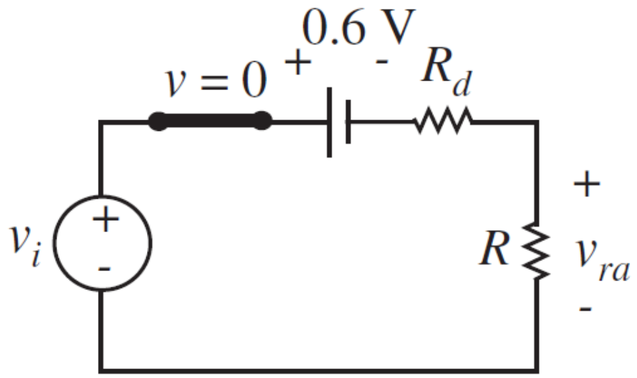

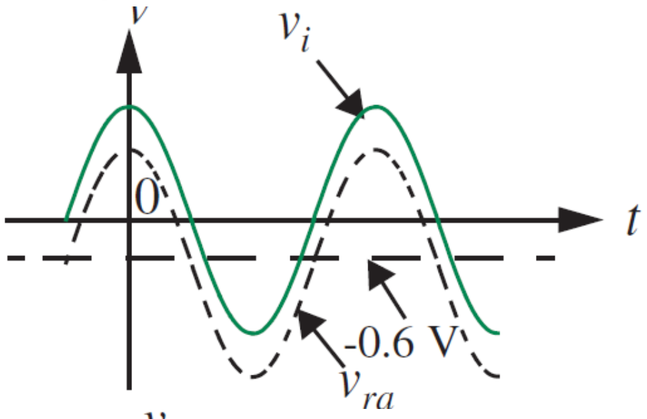

$$v_r = (v_i - 0.6)\frac{R}{R + R_d}$$

for $v_i > 0.6$

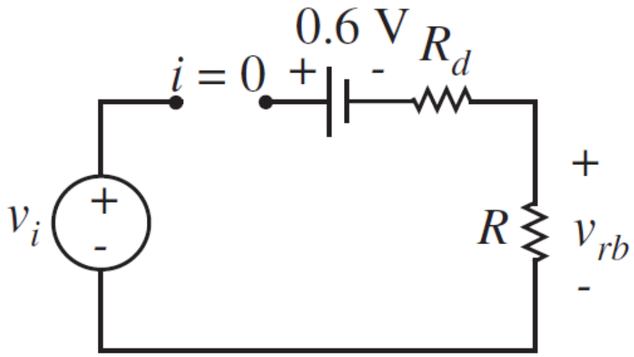

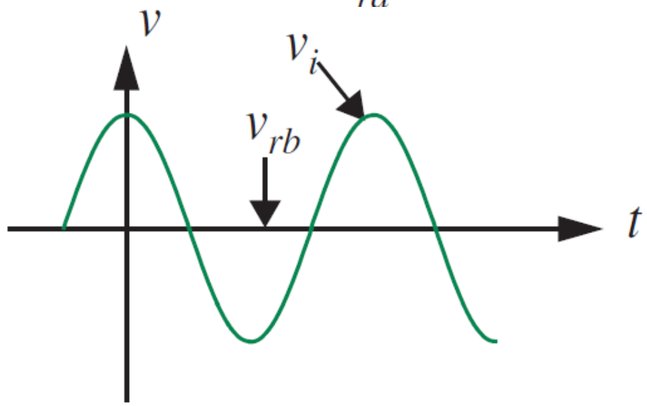

$$v_r = 0$$

for $v_i < 0.6$

Example 6

- Peak detector

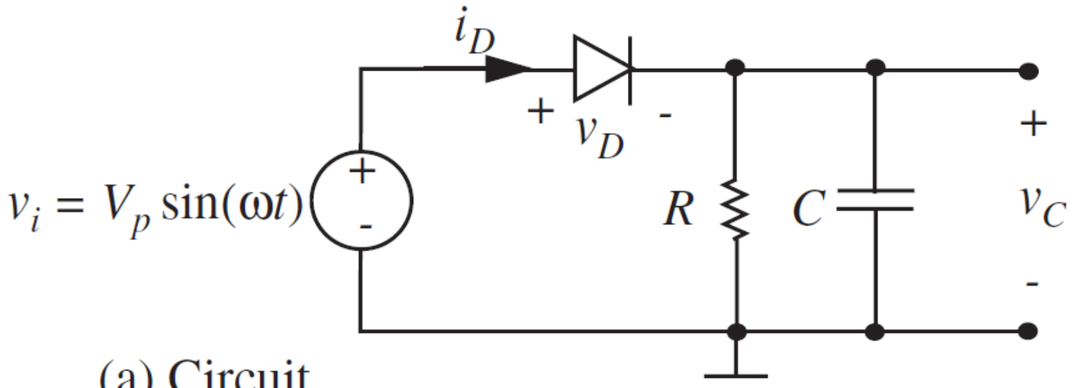

(a) Circuit

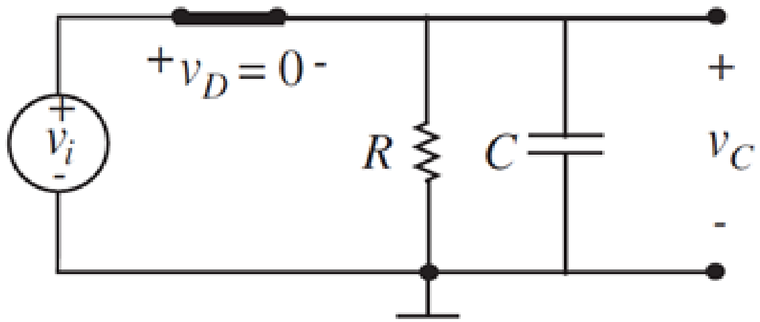

$$v_C = v_i$$

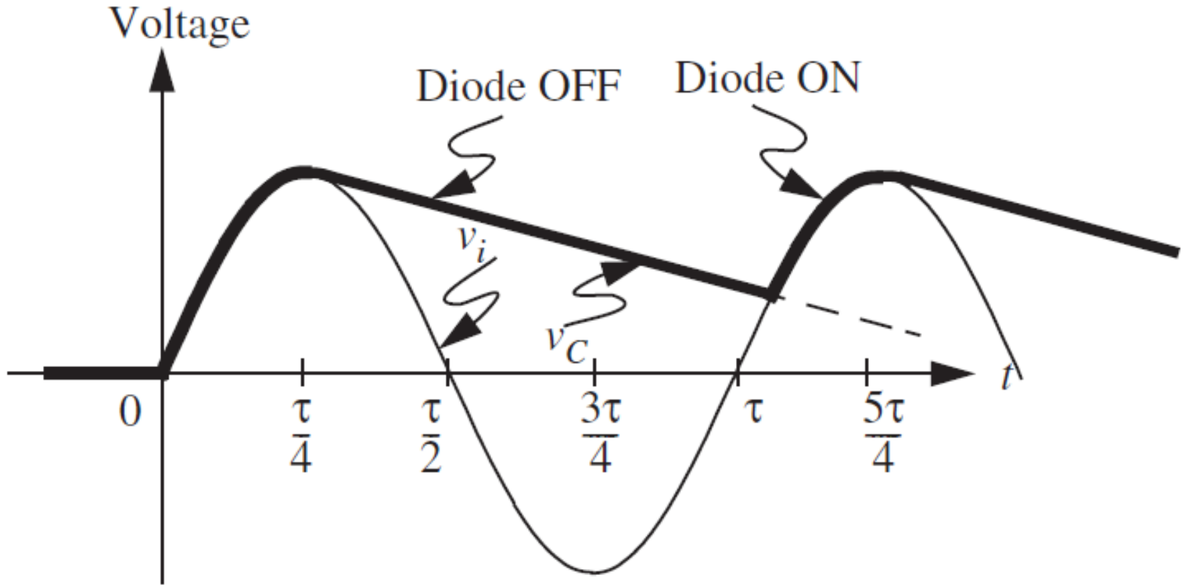

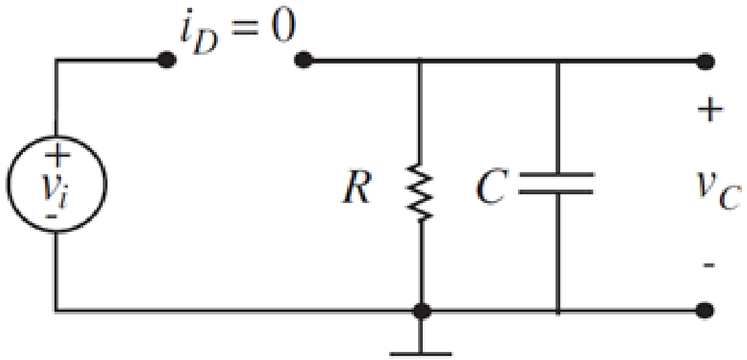

$$v_C = Ke^{-t/RC}$$

$$v_C = V_p e^{-(t-\tau/4)/RC}$$

Example 7

- Analyze the functionality of the following circuits.

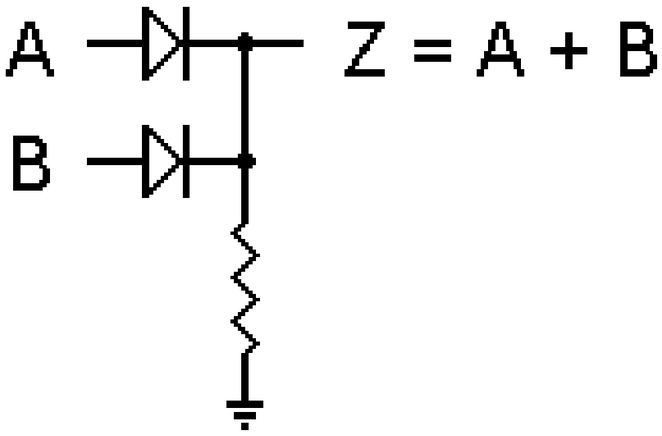

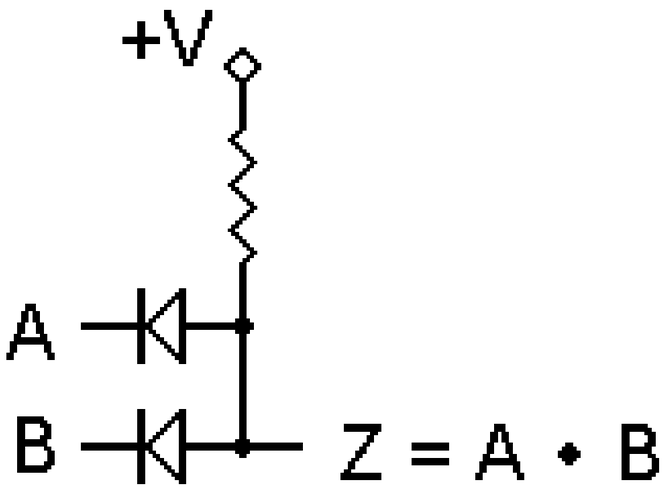

Example 8

- In the circuit below, the threshold voltage of the Zener diode is -6 volts. Plot the output voltage v_{OUT} as a function of v_{IN}.

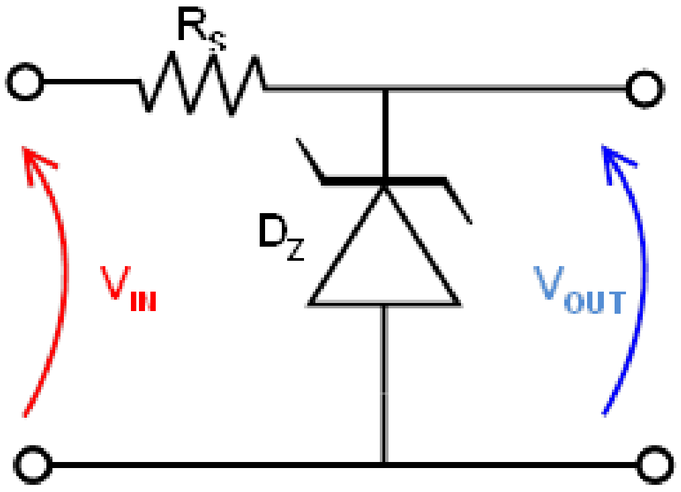

Thanks

دانشگاه صنعتی امیرکبیر
(پلی تکنیک تهران)

Electrical and Electronic Circuits

chapter 11. Transistor

Afarghadan@aut.ac.ir

عظیم فرقدان

مهر ۱۴۰۳

Objectives of the Lecture

- Types of Transistors
- Applications of Transistors
- Transistor Modeling in Digital Circuits
  - Ideal Switch

Transistor

- A three-terminal component, available in two types.
  - ✓ BJT
  - ✓ MOSFET

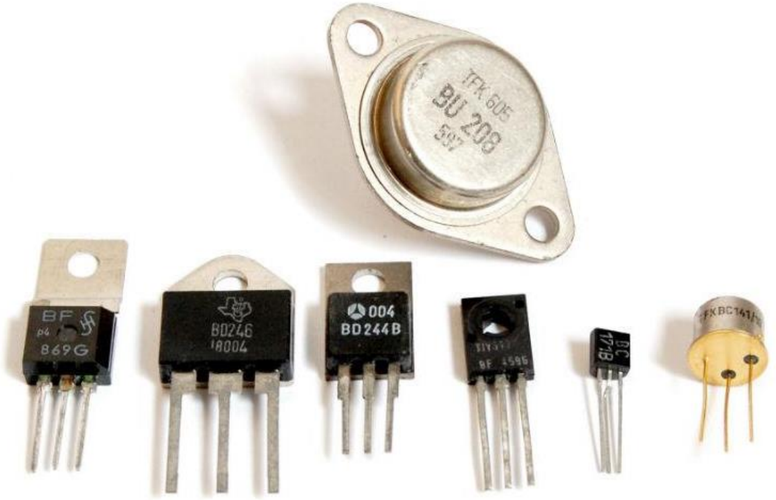

- ✓ BJT: Bipolar Junction Transistor
- ✓ MOSFET: Metal-Oxide-Semiconductor Field Effect Transistor

Transistor BJT (Bipolar Junction Transistor)

- It has three terminals named:
  - ✓ B (Base)
  - ✓ C (Collector)
  - ✓ E (Emitter)

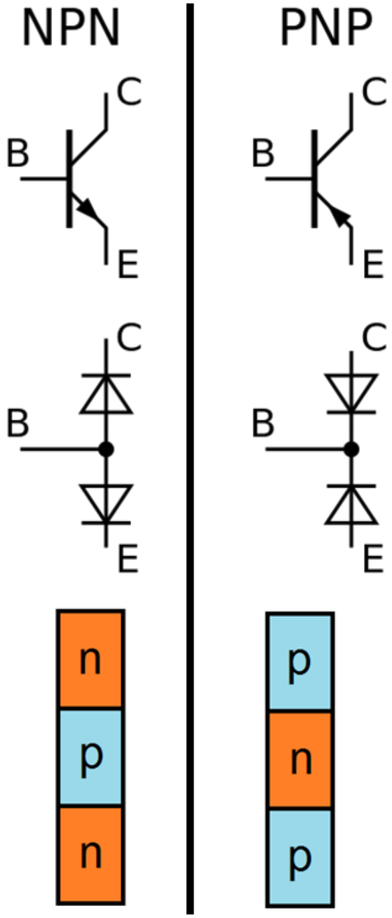

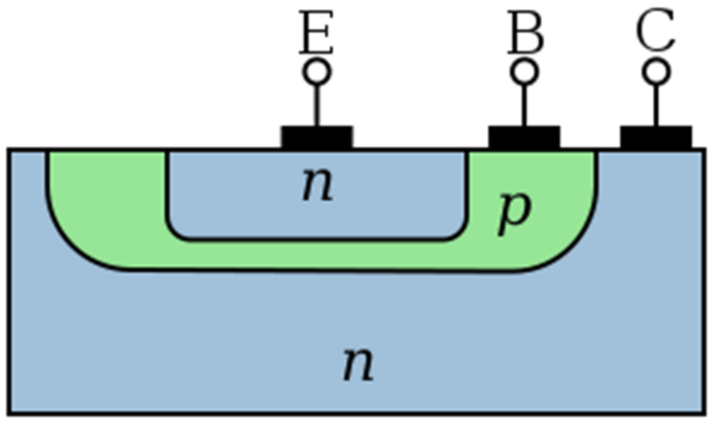

Transistor BJT

Operation of a BJT Transistor

- The passage of a small current through the base allows a larger current to flow between the collector and the emitter.

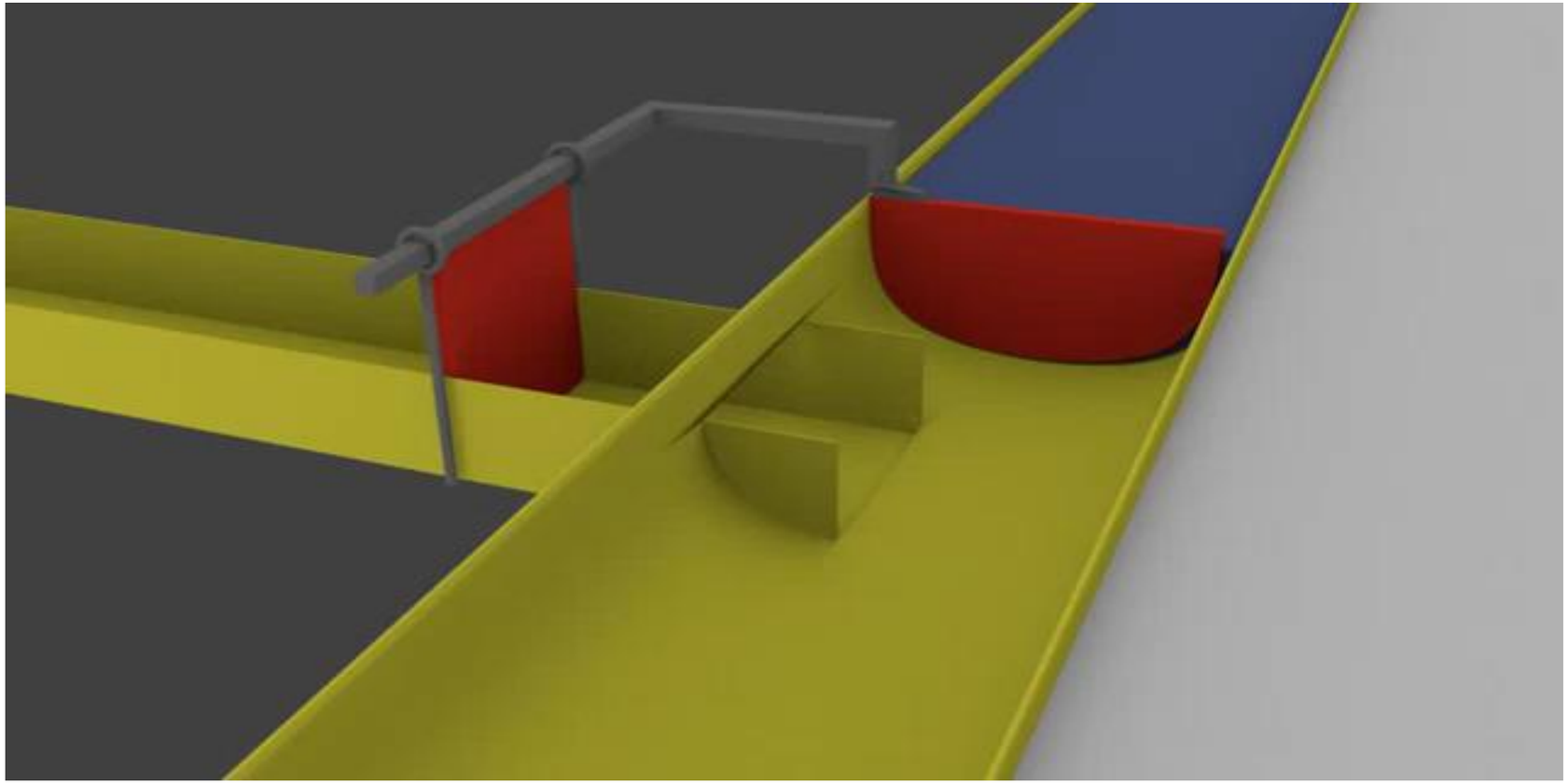

MOSFET Transistor

- It has three terminals named:

  G (Gate)

  S (Source)

  D (Drain)

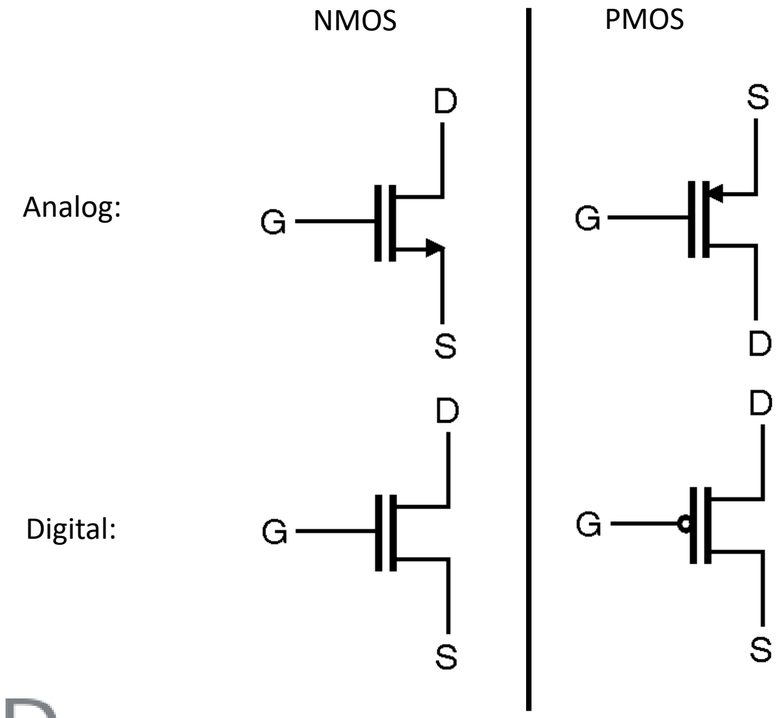

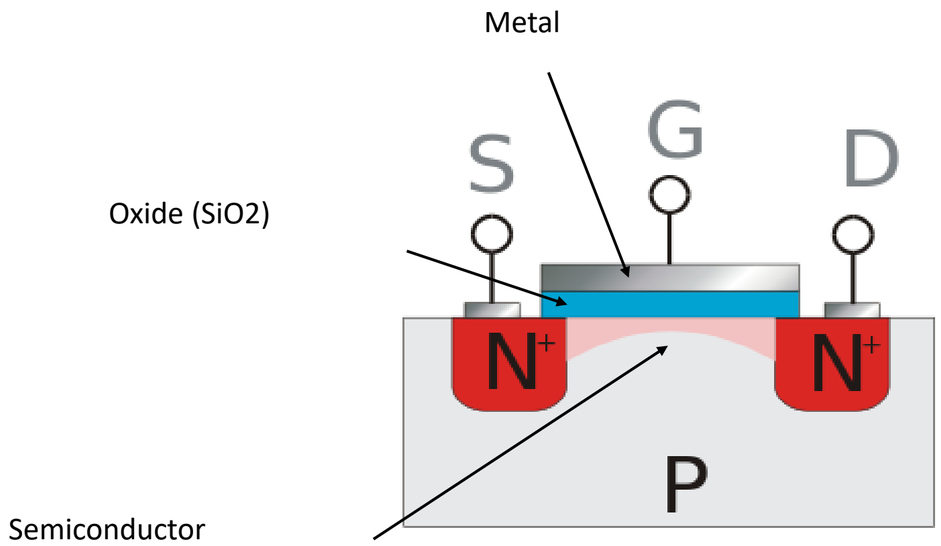

Operation of a MOSFET Transistor

- Applying a sufficient voltage to the gate enables a proportional current flow between the drain and the source.

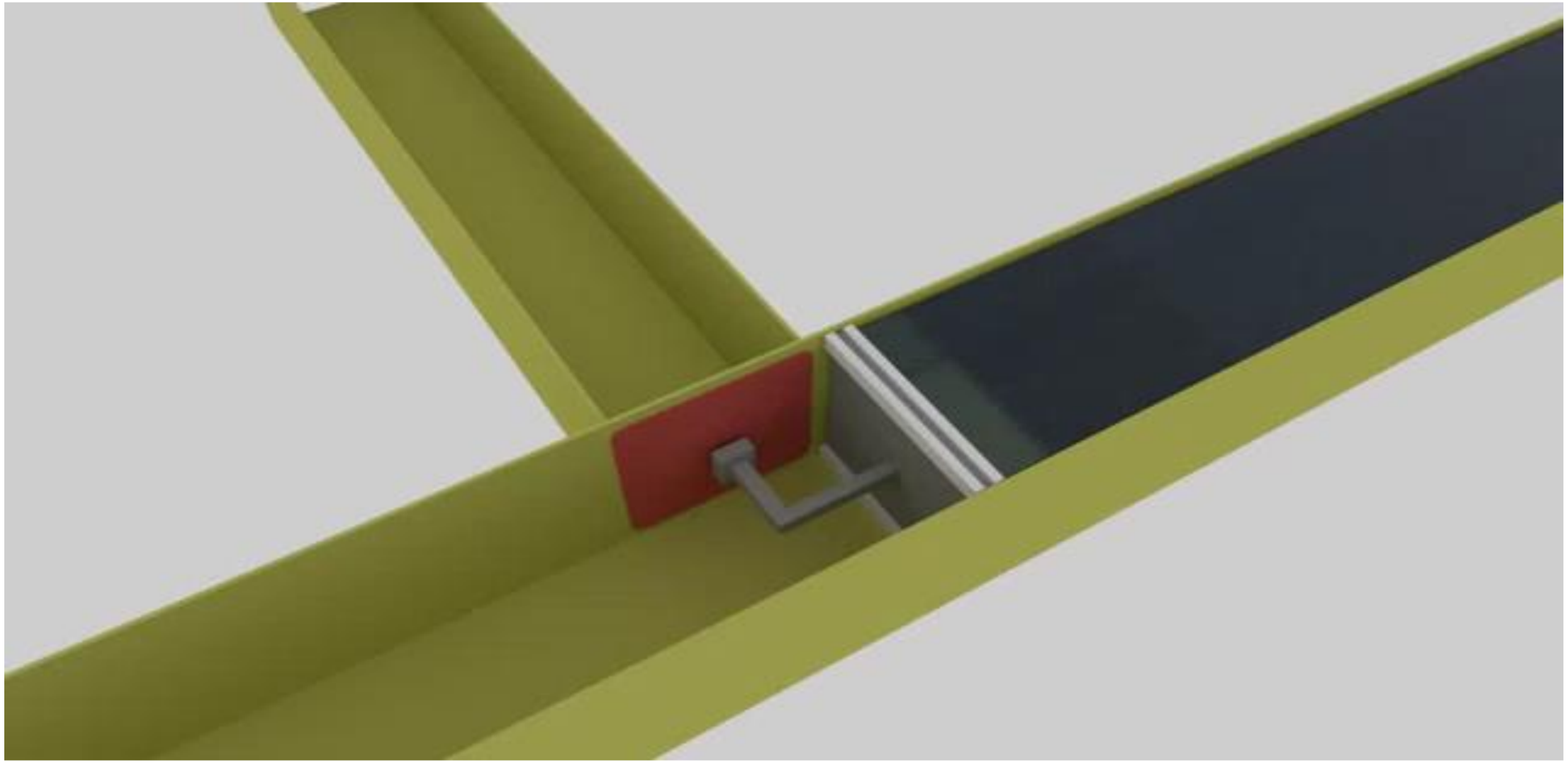

Differences Between BJT and MOSFET Transistors

MOSFET	BJT
ساختار متقارن	ساختار نامتقارن
ولتاژ گیت، جریان سورس-درین را کنترل می‌کند.	جریان بیس، جریان کلکتور-امیتر را کنترل می‌کند.
توان مصرفی کم و مناسب برای مدارها با تعداد بسیار زیاد ترانزیستور	توان مصرفی زیاد (به دلیل غیرصفر بودن جریان ورودی)
مناسب برای مدارهای آنالوگ و دیجیتال	مناسب برای مدارهای آنالوگ فرکانس بالا
وابستگی کم بهره به دما	وابستگی زیاد بهره به دما

Applications of Transistors

In analog circuits, transistors are utilized as amplifiers.

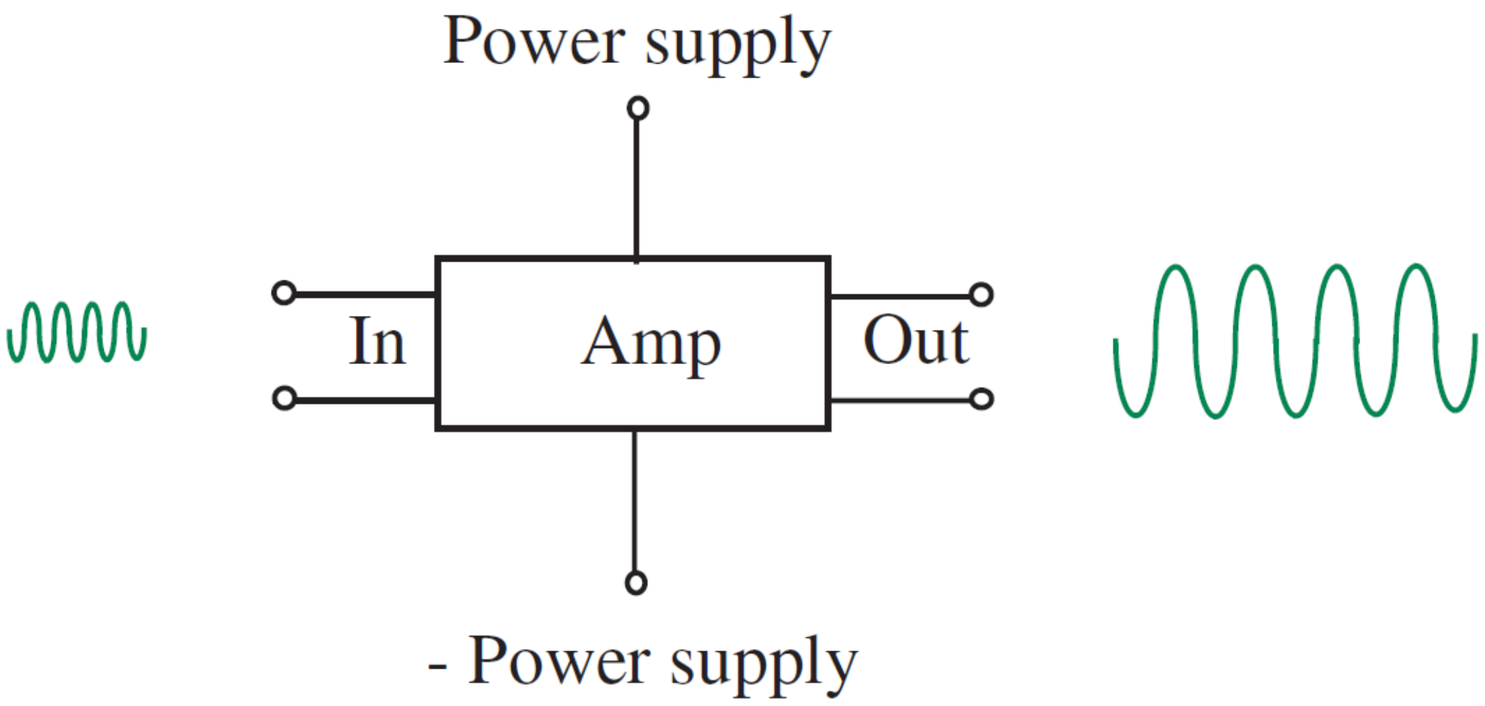

Example: Amplifying the audio signal received from a microphone.

Applications of Transistors

In analog circuits, transistors are utilized as amplifiers.

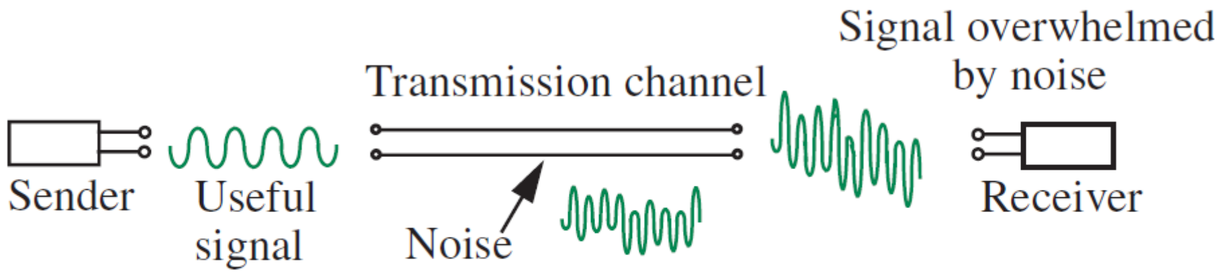

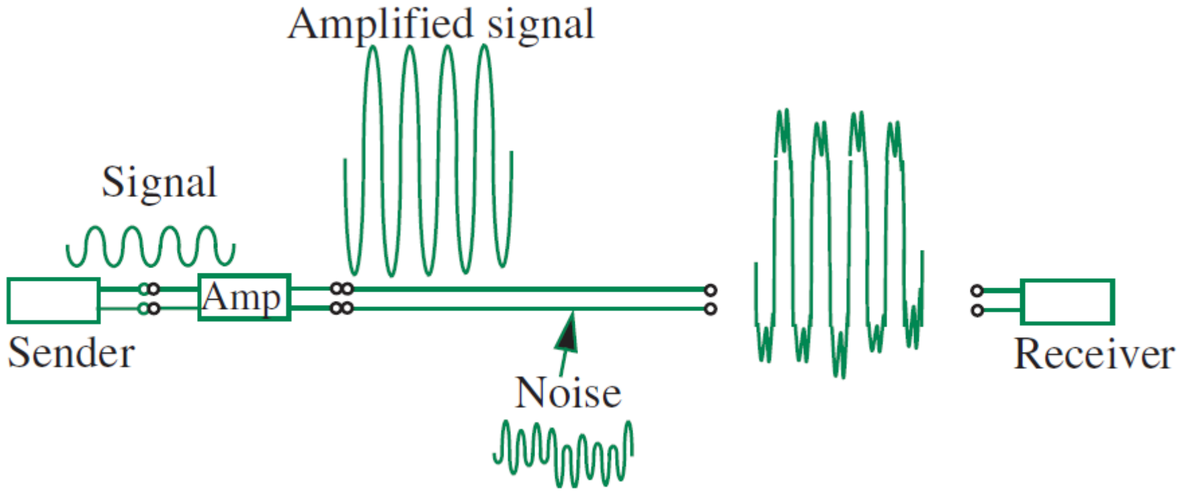

Applications of Transistors

In digital circuits, transistors are used as switches.

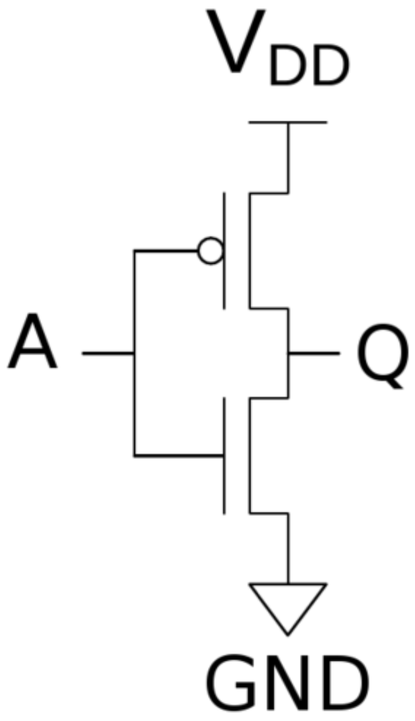

Example: Inverter gate.

Transistor Model as a Switch

Example: Turning a lamp on and off using a switch.

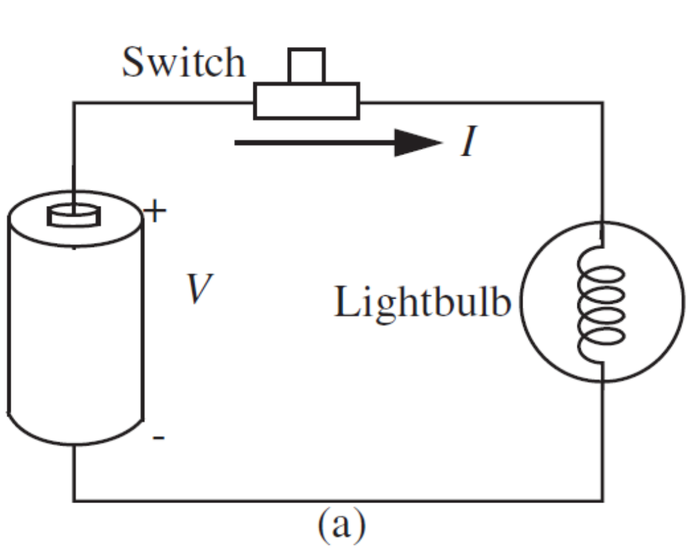

Physical Circuit

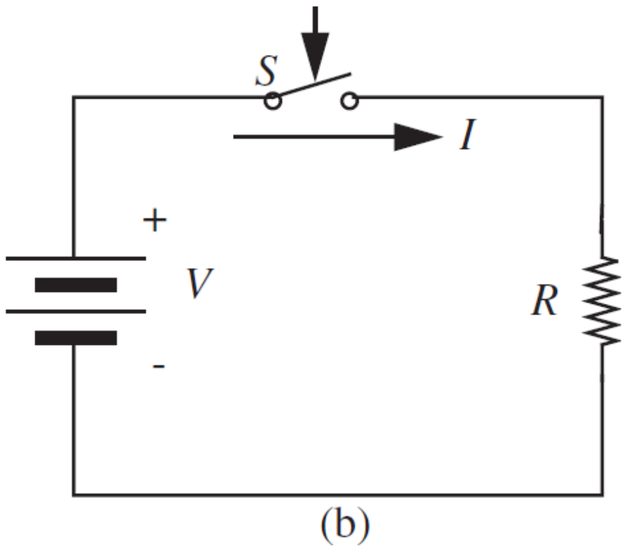

Electrical Model

In many applications, a switch is required that can be controlled electronically by an electrical signal.

NMOS Transistor as a Switch

➢ON State

$$\boldsymbol{Control = 1 \rightarrow v = 0}$$

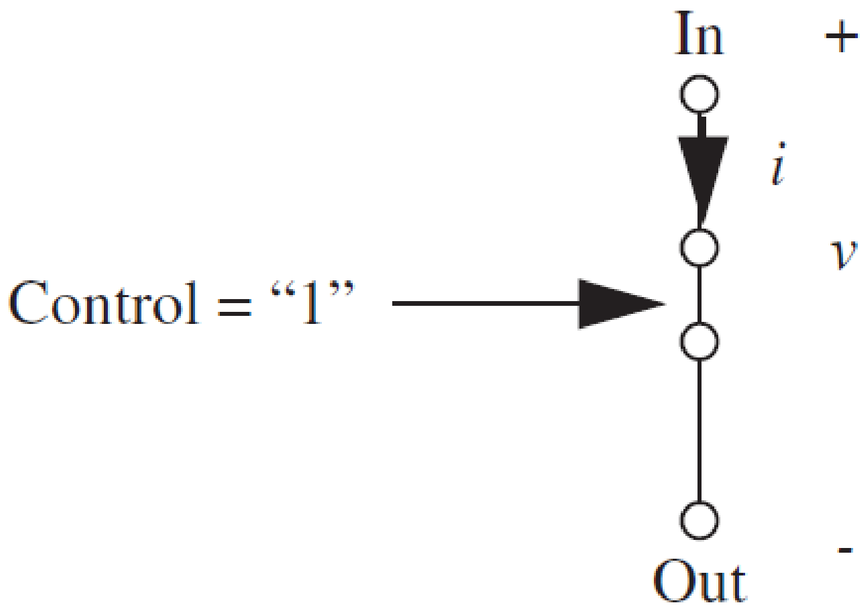

➢Off State

$$\boldsymbol{Control = 0 \rightarrow i = 0}$$

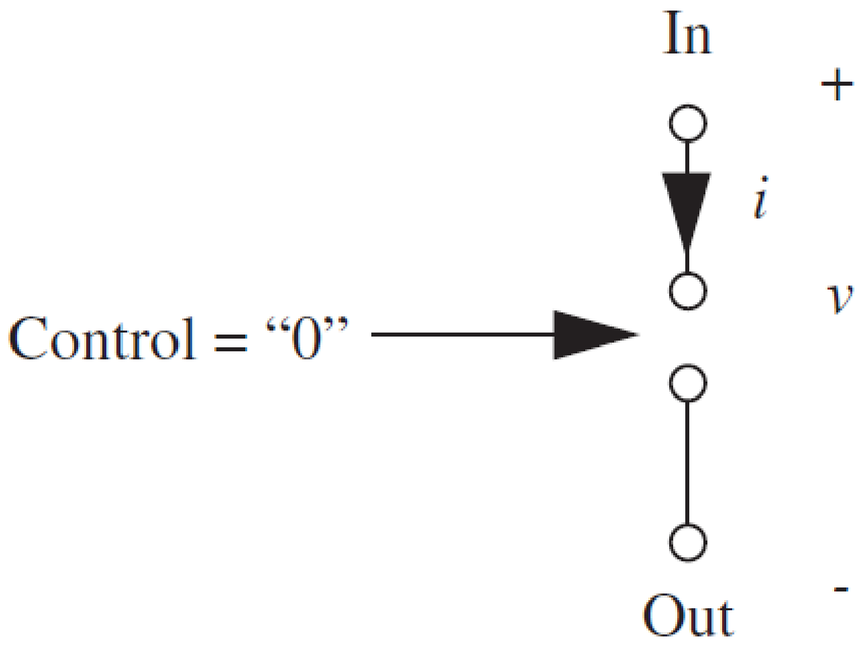

NMOS Transistor as a Switch

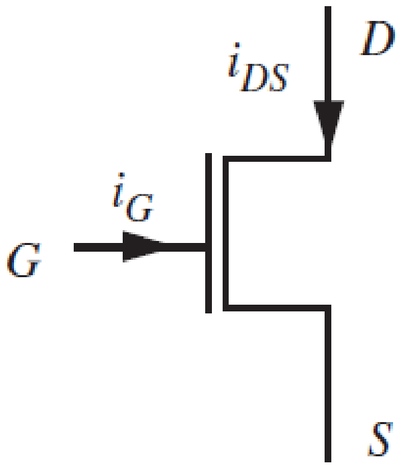

NMOS Transistor

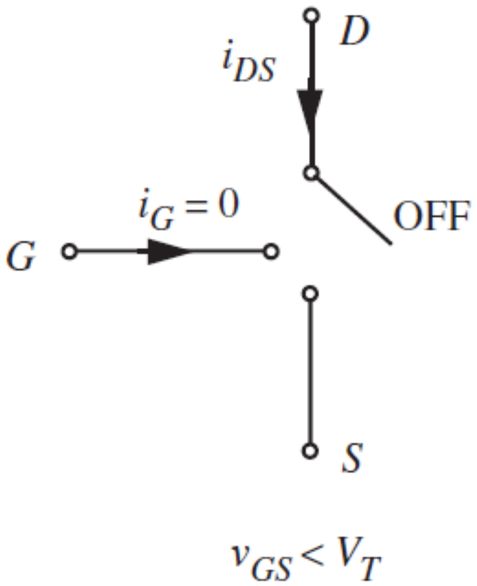

Disconnected State (OFF)

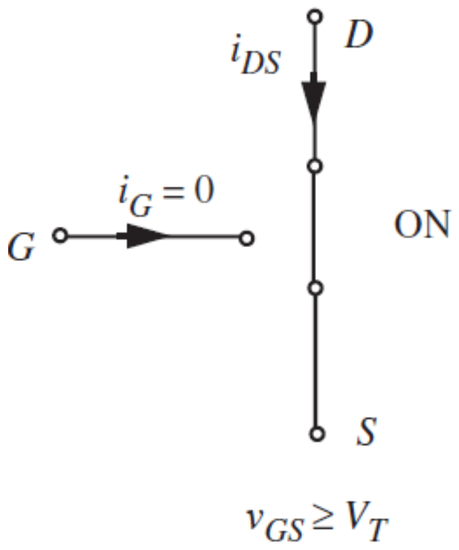

Connected State (ON)

The threshold voltage (V_T) of an NMOS transistor is a positive value that defines the minimum gate-to-source voltage (V_{GS}) required to form a conductive channel between the drain and source.

Construction of Logical Gates

➢Example: Series connection of two switches

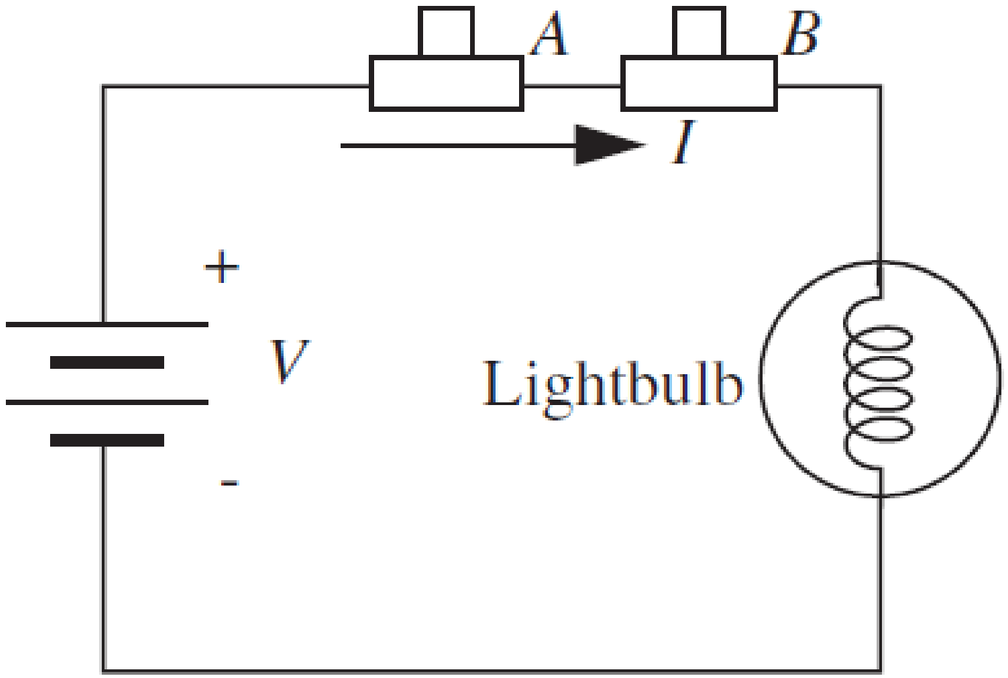

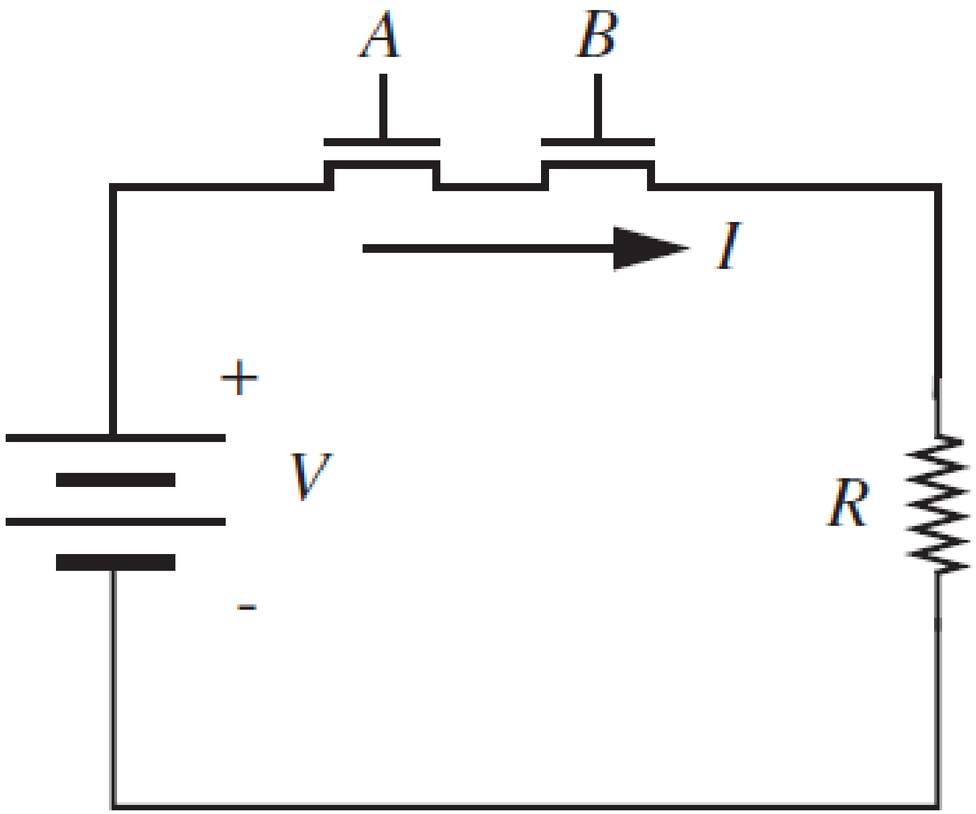

Construction of Logical Gates

- Not Gate

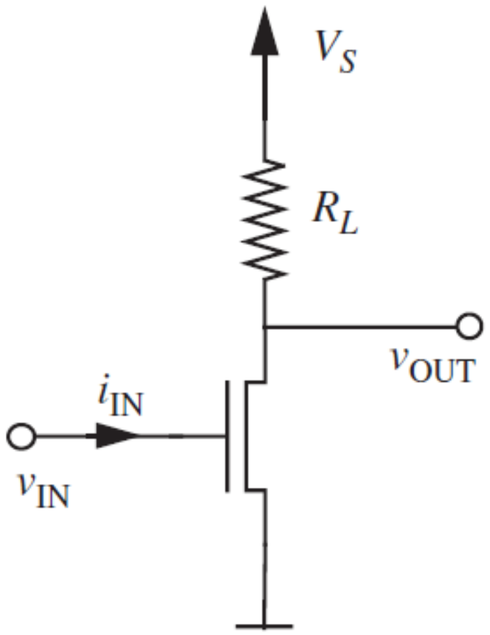

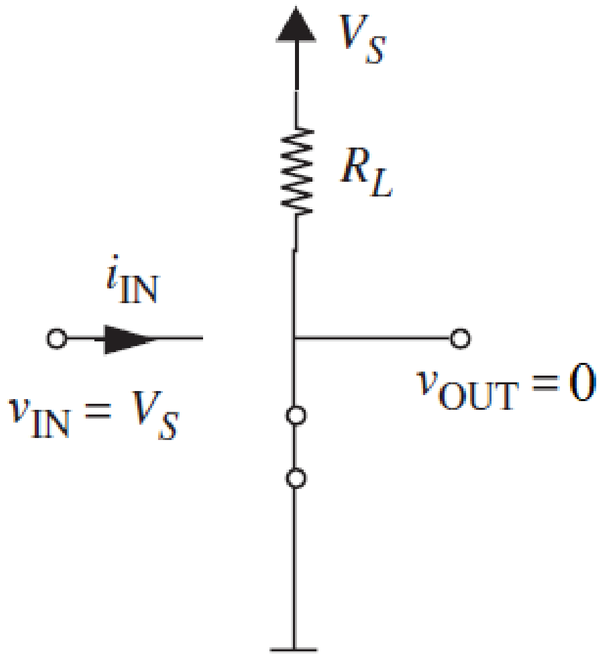

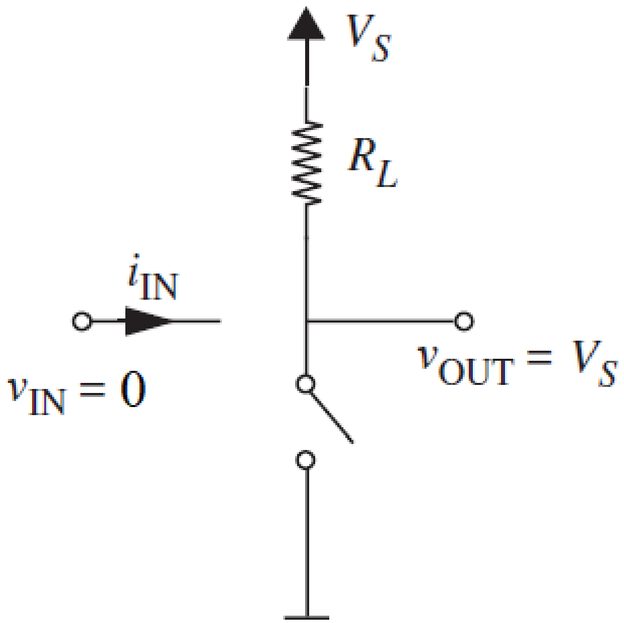

Example

- ✓ What gate is the circuit opposite?

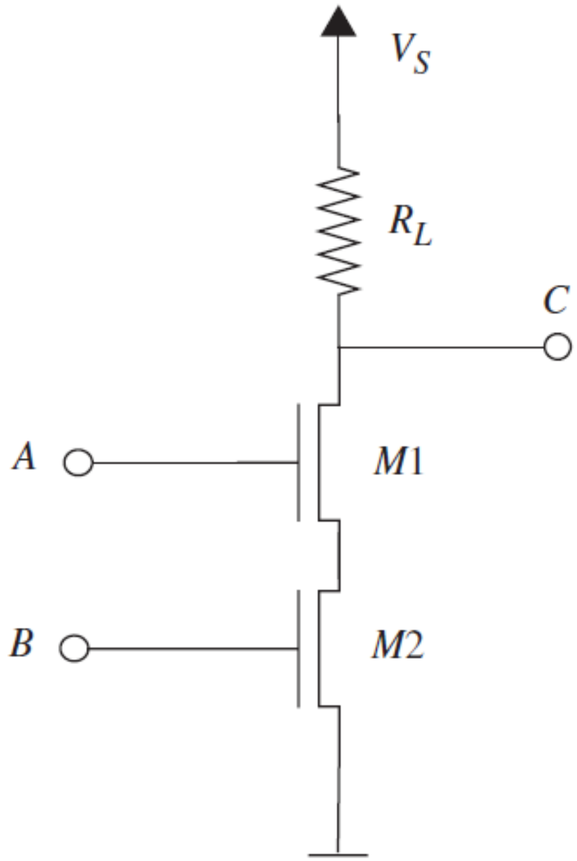

CMOS technology

Using NMOS transistors on the bottom and PMOS gates on the top

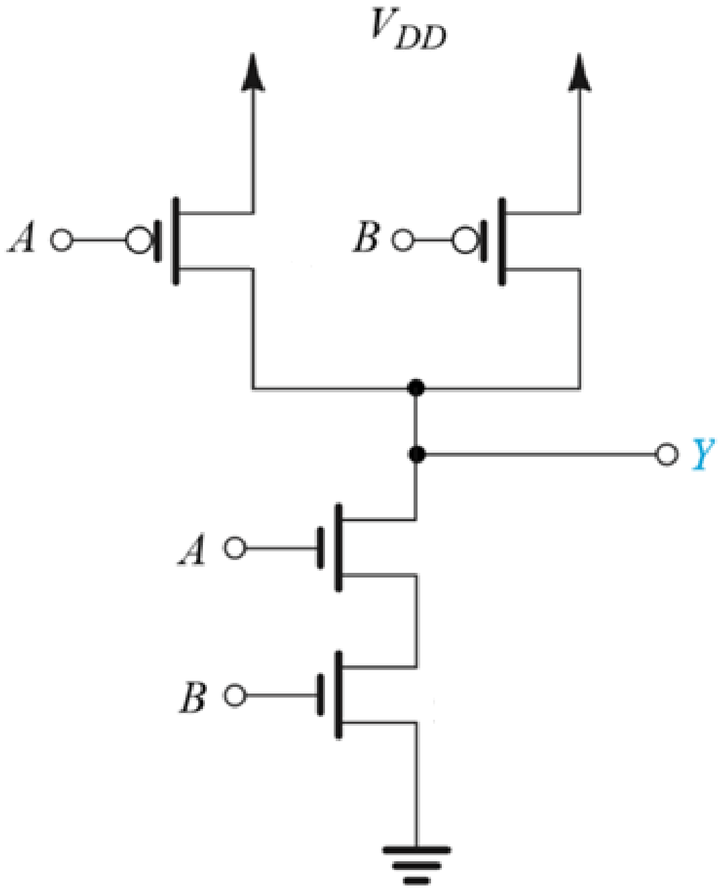

What gate is the circuit opposite?

What advantage does it have over the implementation with NMOS and resistors?

Exercise 1

✓ What type of gate is represented by the circuit below?

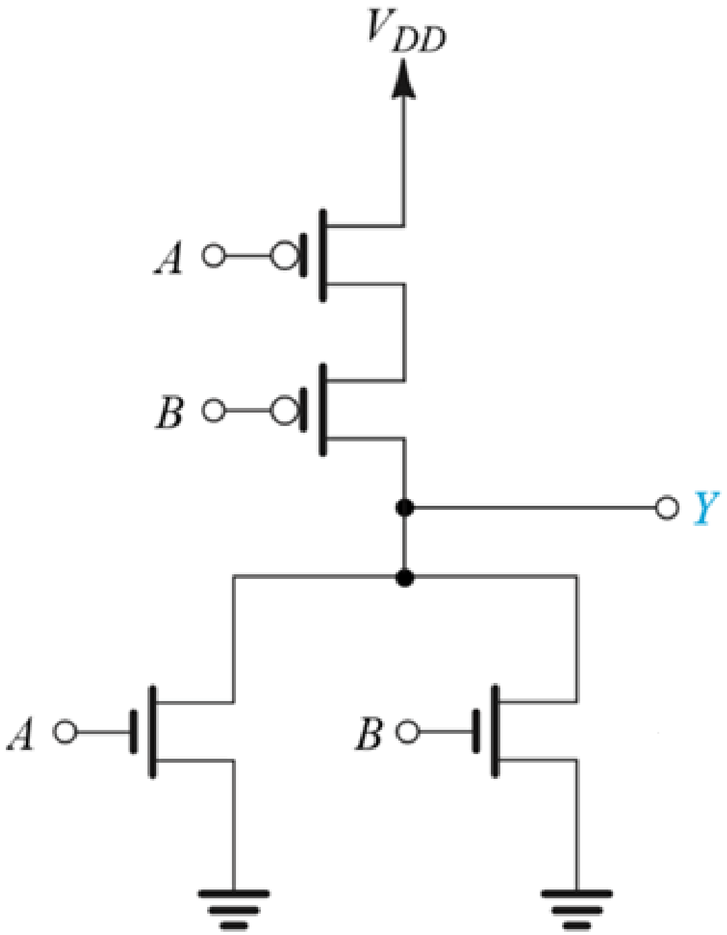

Implement the Boolean function $Y = \overline{A(B + CD)}$?

- Using **NMOS transistors and resistors** ?
- **CMOS structure?**

Thanks

دانشگاه صنعتی امیرکبیر
(پلی تکنیک تهران)

Electrical and Electronic Circuits

chapter 12. Transistor

Afarghadan@aut.ac.ir

عظیم فرقدان

مهر ۱۴۰۳

Objectives of the Lecture

- **Transistor Modelling as an Amplifier**
  - Large-Signal Analysis
  - Small-Signal Analysis
- DC and AC Analysis of Transistors
- Various Configurations

Applications of Transistors

In analog circuits, transistors are utilized as amplifiers.

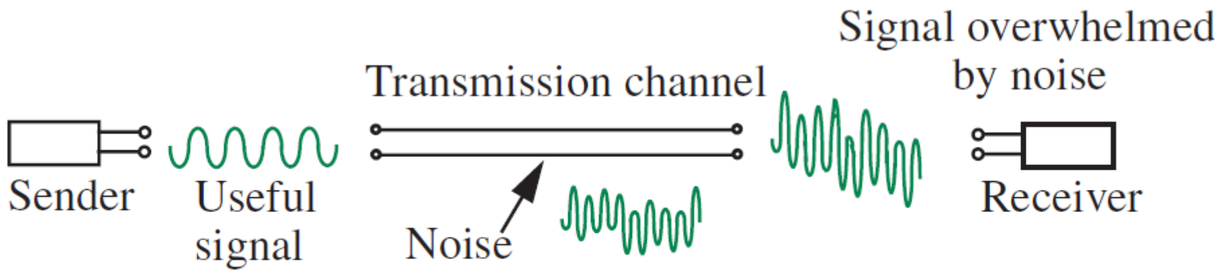

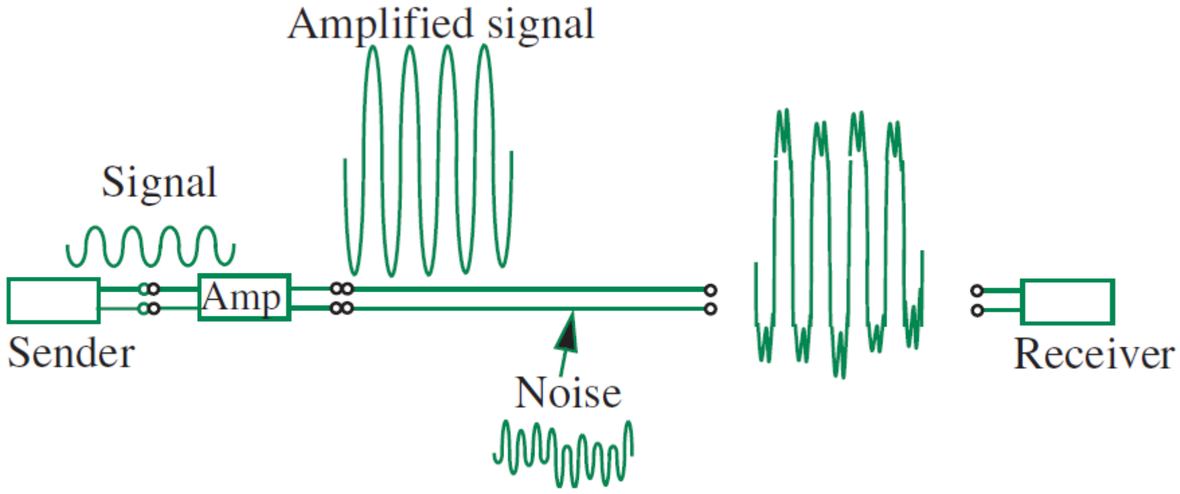

Nonlinear Behaviour of the Diode

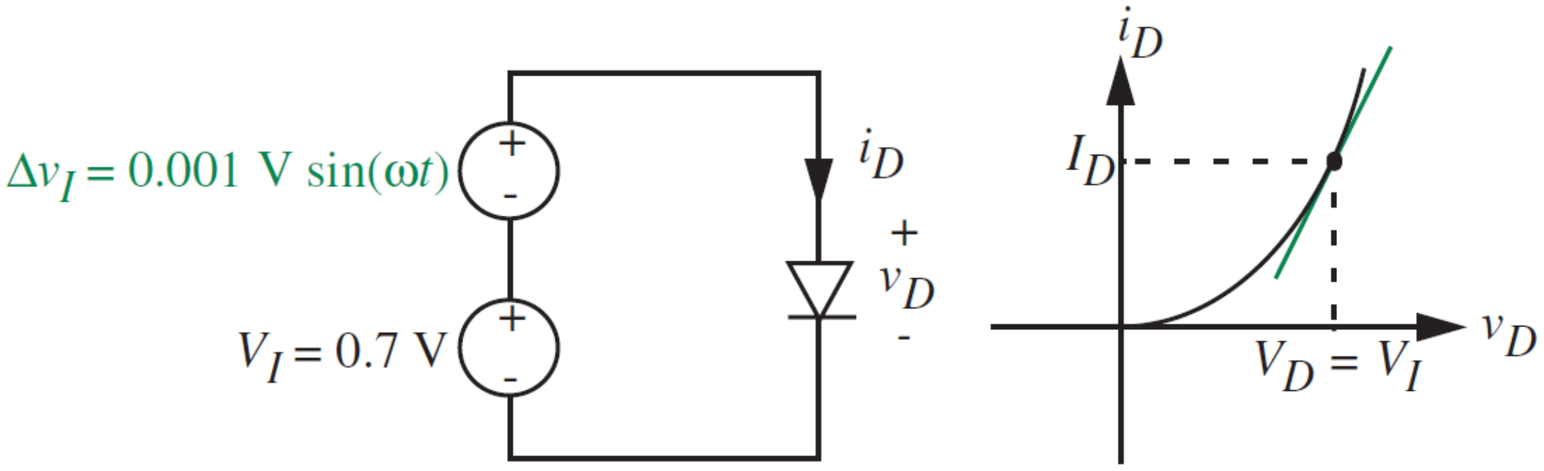

- ✓ Using the Nonlinear Model for Calculating Diode Current, We Have:
- ✓ $\boldsymbol{i_D = I_s[e^{(V_I+\Delta v_I)/V_{TH}} - 1]}$

Nonlinear Behavior of the Diode

Using the taylor expansion around V_I, we have:

- $f(x) = f(a) + f'(a)(x-a) + \frac{1}{2!}f''(a)(x-a)^2 + \cdots$
  - $i_D = f(x) = I_s[e^{x/V_{TH}} - 1]$
  - $x = V_I + \Delta v_I$
  - $a = V_I$
- $i_D = I_s[e^{(V_I+\Delta v_I)/V_{TH}} - 1]$
- $= I_s(e^{V_I/V_{TH}} - 1) + I_s e^{V_I/V_{TH}}\left[\frac{\Delta v_I}{V_{TH}} + \frac{1}{2}\left(\frac{\Delta v_I}{V_{TH}}\right)^2 + \cdots\right]$
- $\approx I_s(e^{V_I/V_{TH}} - 1) + \frac{I_D}{V_{TH}}\Delta v_I$

Small-Signal and Large-Signal Models

$$i_D \approx I_s(e^{V_I/V_{TH}} - 1) + \frac{I_D}{V_{TH}}\Delta v_I$$

- ✓ بخش DC جریان دیود با بخش DC منبع رابطه غیرخطی دارد.
- ✓ یعنی دیود در برابر یک سیگنال بزرگ رفتاری غیرخطی دارد.
- ✓ به این مدل غیرخطی که قبلا نیز دیده بودیم، مدل سیگنال بزرگ گویند.

- ✓ بخش AC جریان دیود با بخش AC منبع رابطه تقریباً خطی دارد.
- ✓ یعنی دیود در برابر یک سیگنال کوچک رفتاری خطی دارد و مانند یک مقاومت با مقدار $\frac{V_{TH}}{I_D}$ عمل می‌کند.
- ✓ به این مدل خطی، مدل سیگنال کوچک گویند.

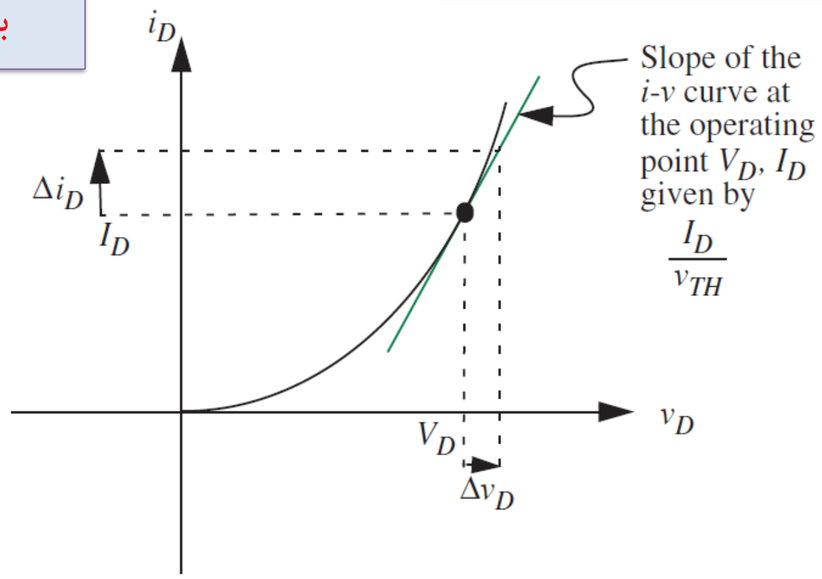

Large-Signal Model of MOSFET

✓ First-Order Shockley model:

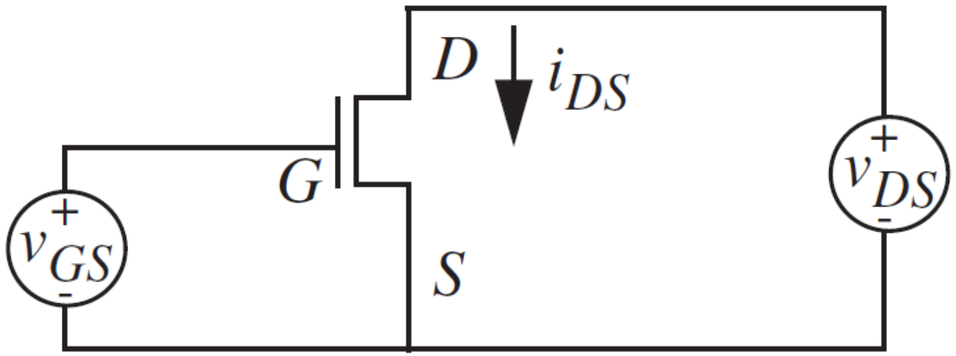

$$I_{ds} = \begin{cases} 0 & V_{gs} < V_t & Cut\ off \\ K\left(V_{gs} - V_t - \dfrac{V_{ds}}{2}\right)V_{ds} & V_{ds} < V_{gs} - V_t & Triode \\ \dfrac{K}{2}\left(V_{gs} - V_t\right)^2 & V_{ds} > V_{gs} - V_t & Saturation \end{cases}$$

MOSFET Voltage-Current Characteristics

- The relationship between drain current (i_{DS}) and drain-source voltage (v_{DS})

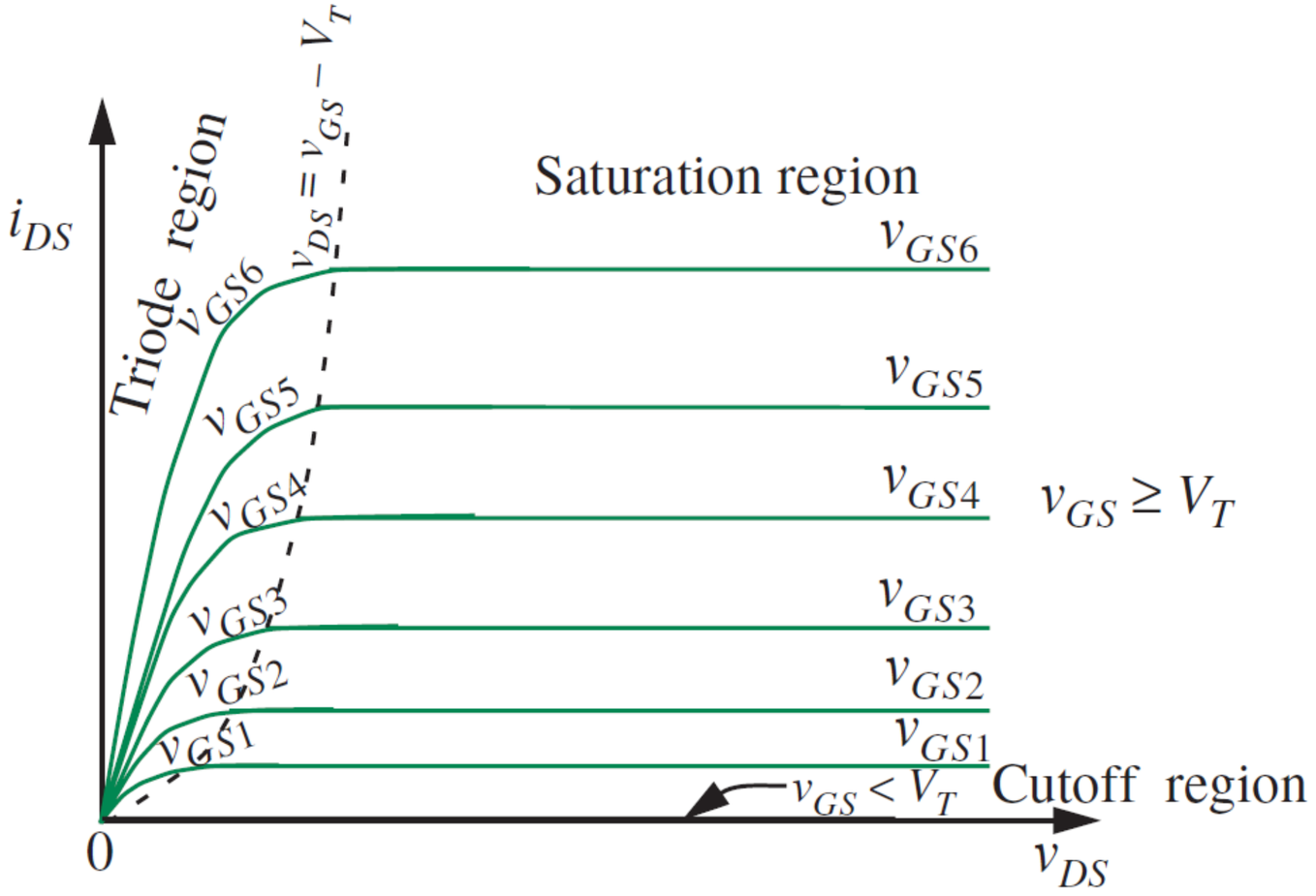

MOSFET Voltage-Current Characteristics

- The relationship between drain current (i_{DS}) and Gate-source voltage (v_{GS})

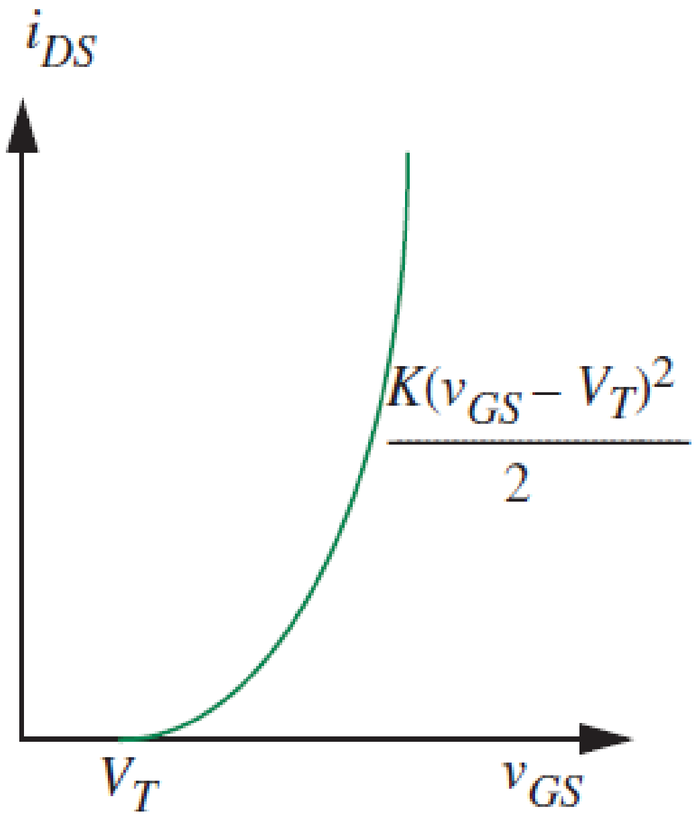

valid when $v_{DS} \geq v_{GS} - V_T$

DC Analysis of MOSFET Transistor

- ✓ روابط KVL دو طرف ترانزیستور را بنویسید.
- ✓ با استفاده از این روابط، ولتاژ V_{gs} را به‌دست آورید. (جریان گیت همیشه صفر است).
- ✓ اگر $V_{gs} < V_t$ باشد، ترانزیستور قطع است: $I_{ds} = 0$
- ✓ اگر $V_{gs} > V_t$ باشد، یا اشباع است یا خطی.
- ✓ فرض می‌کنیم اشباع است: $I_{ds} = \frac{K}{2}\left(V_{gs} - V_t\right)^2$
- ✓ ولتاژ V_{ds} را به‌دست آورده و شرط اشباع بودن را چک می‌کنیم:
  - ✓ $V_{ds} > V_{gs} - V_t$
- ✓ اگر تناقض داشت خطی است: $I_{ds} = K\left(V_{gs} - V_t - \frac{V_{ds}}{2}\right)V_{ds}$

Example

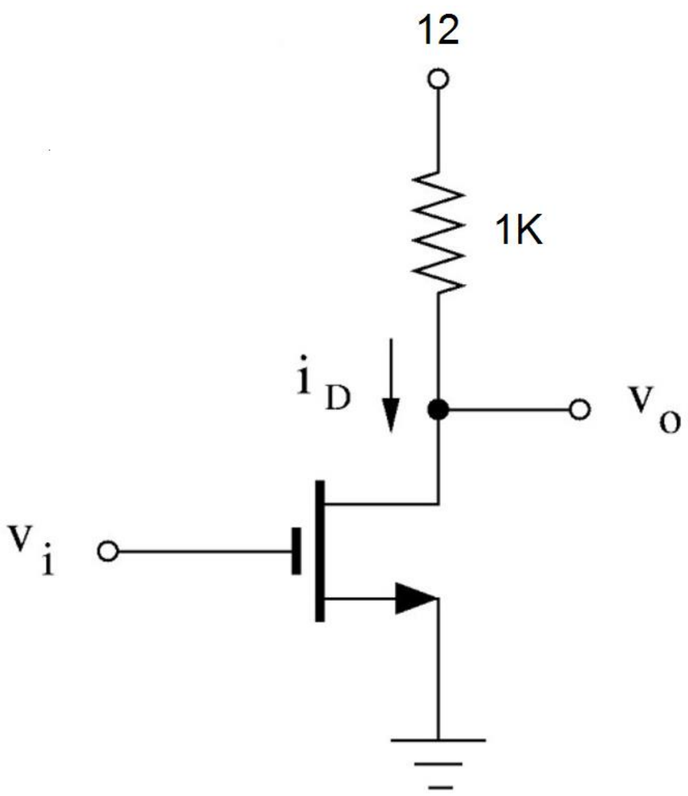

✓ولتاژ V_o را بیابید. $(\mathrm{K} = 0.5\frac{mA}{V^2}, V_t = 2, v_i = 0)$

✓روابط KVL دو طرف:

$$v_{gs} = v_i = 0 ✓$$

$$-12 + 1000 i_D + v_{ds} = 0 ✓$$

✓$v_{gs} < v_t$ پس قطع است: $i_D = 0$

$$v_{ds} = 12 ✓$$

Example

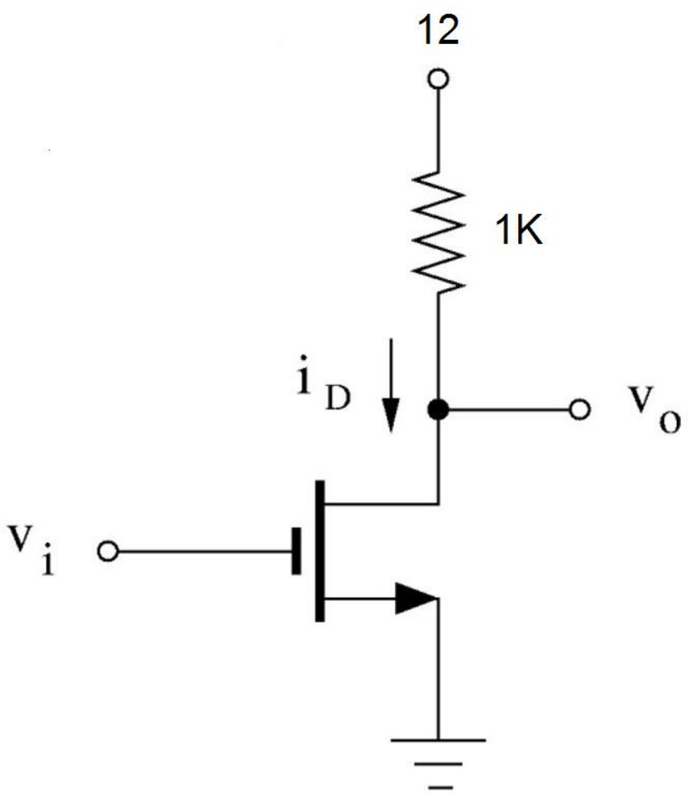

✓ V_o را بیابید. $(K = 0.5\frac{mA}{V^2}, V_t = 2, v_i = 6)$

✓ روابط KVL دو طرف:

$$v_{gs} = v_i = 6 \checkmark$$

$$-12 + 1000 i_D + v_{ds} = 0 \checkmark$$

✓ $v_{gs} > V_t$ پس یا خطی است یا اشباع

✓ فرض می‌کنیم اشباع است:

$$i_D = \frac{K}{2}\left(v_{gs} - V_t\right)^2 = 4mA \rightarrow v_{ds} = 12 - 4 = 8 \checkmark$$

$$v_{ds} > v_{gs} - V_t = 4 \checkmark$$

Example

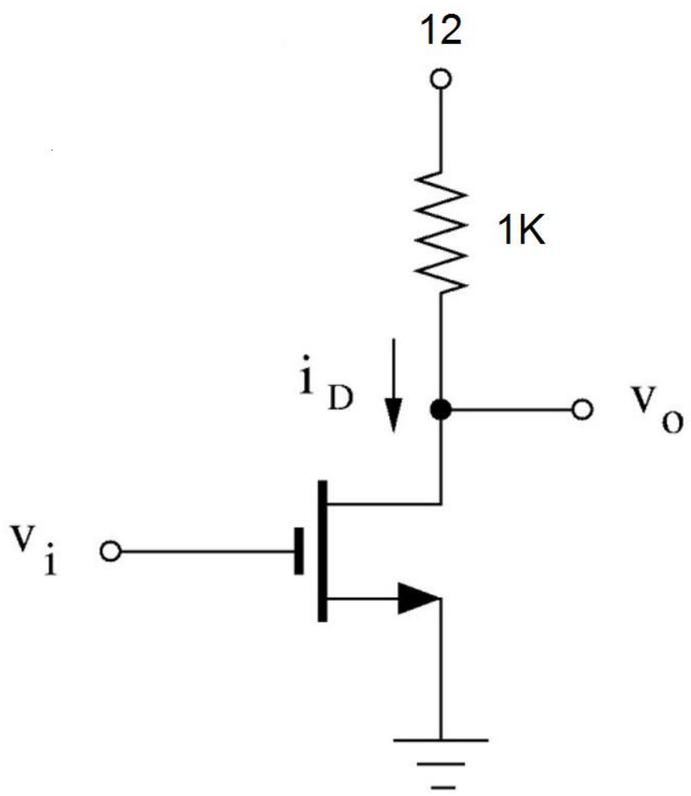

✓ V_o را بیابید. $(K = 0.5\frac{mA}{V^2}, V_t = 2, v_i = 12)$

✓ روابط KVL دو طرف:

✓ $v_{gs} = v_i = 12$

✓ $-12 + 1000 i_D + v_{ds} = 0$

✓ $v_{gs} > V_t$ یا اشباع است یا خطی

✓ فرض اشباع:

✓ $i_D = \frac{K}{2}\left(v_{gs} - V_t\right)^2 = 25mA \rightarrow v_{ds} = 12 - 25 = -13$

✓ $v_{ds} < v_{gs} - V_t = 10$

✓ فرض خطی:

✓ $i_D = K\left(v_{gs} - V_t - \frac{v_{ds}}{2}\right)v_{ds} = 0.25\left(20v_{ds} - v_{ds}^2\right) \xrightarrow{use\ DS\ KVL}$

✓ $v_{ds} = 2.2 < 10$ $\quad$ $v_{ds} = 21.8$ ×

Small-Signal Models

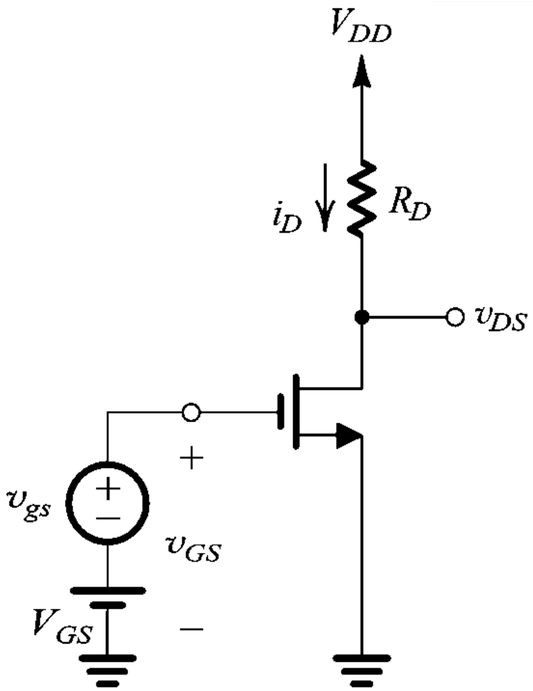

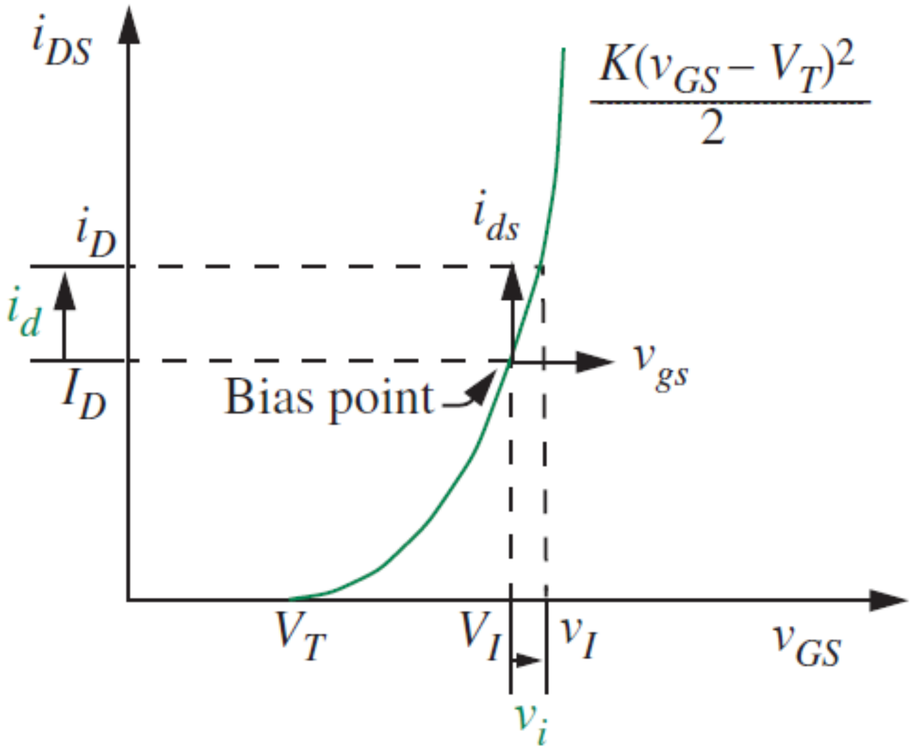

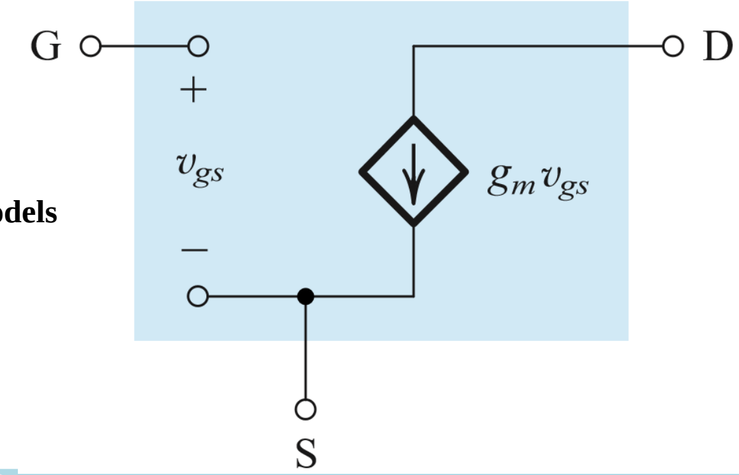

Small-Signal Models

Saturation Region:

$$g_m = \frac{\partial i_D}{\partial v_{GS}}\Big|_{v_{GS}=V_{GS}} = K(V_{GS} - V_t)$$

The separation of DC analysis from AC analysis

- ✓ $v_{DS} = V_{DD} - i_D R_D$
- ✓ $i_D = \underbrace{I_D}_{\text{DC component}} + \underbrace{i_d}_{\text{AC component}}$
- ✓ $v_{DS} = \underbrace{V_{DS}}_{\text{DC component}} + \underbrace{v_{ds}}_{\text{AC component}}$
- ✓ $V_{DS} = V_{DD} - R_D I_D$
- ✓ $v_{ds} = -R_D i_d$

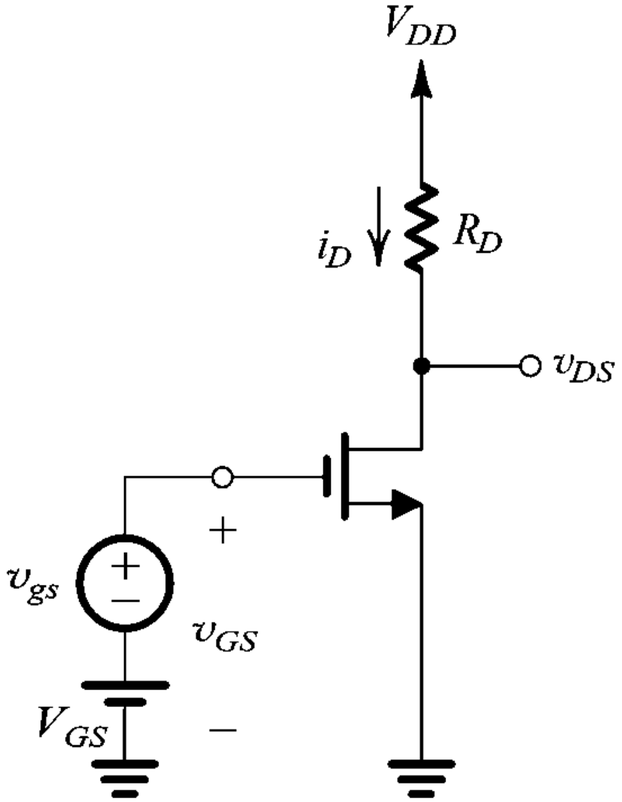

- ✓ The response of the DC component is determined by the DC input
- ✓ The response of the AC component is determined by the AC input.
- ✓ Consequently, DC and AC analyses can be performed independently.

The separation of DC analysis from AC analysis

- $v_{ds} = -R_D i_d = -R_D g_m v_{gs}$

- $A_v = \frac{v_{ds}}{v_{gs}} = -g_m R_D$ Voltage Gain

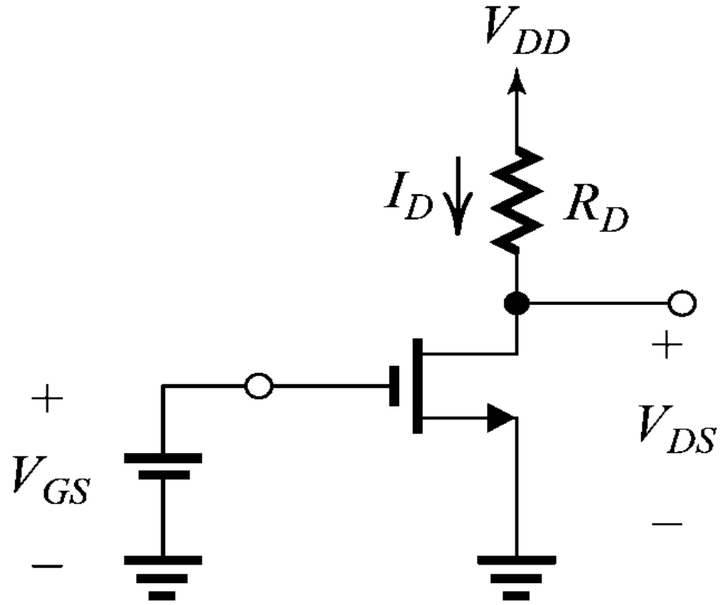

DC analysis

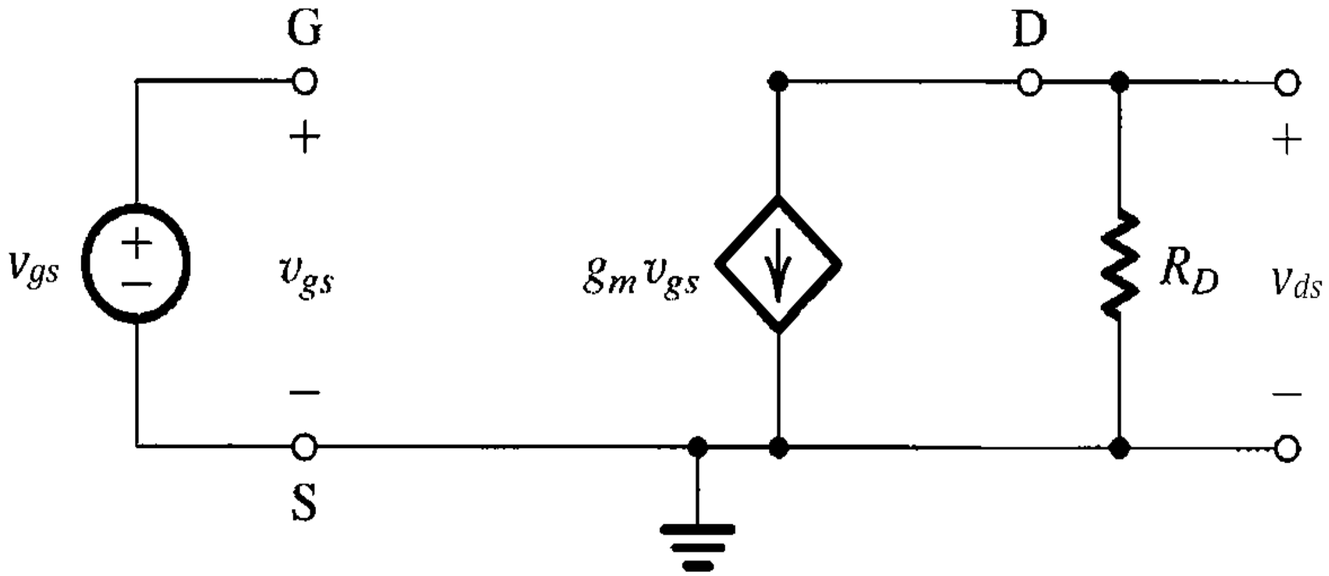

AC analysis

- Why is the terminal of the resistor R_D connected to the ground?

Example

➢ Reason for Using Coupling Capacitors:

Capacitors act as open circuits for DC voltages. Therefore, when multiple stages of these circuits are connected, the DC bias of one stage does not affect the other. This simplifies the design of the amplifier.

- ✓ A capacitor acts as a short circuit for AC signals ($\frac{1}{cj\omega}\approx 0$ for high frequencies).
- ✓ As a result, AC signals can pass through the capacitor.

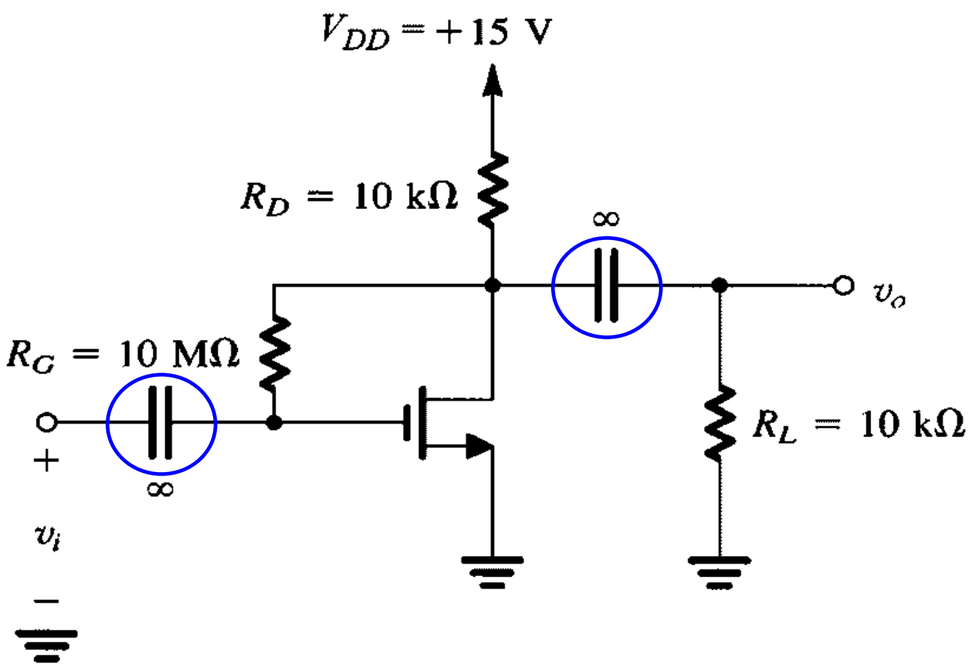

Example (Continue)

Determine the Voltage Gain A_v:

- **DC Analysis:**
  - ✓ Capacitors are considered open circuits.
  - ✓ Find the biasing conditions and the g_m.
- **AC Analysis:**
  - ✓ Capacitors are treated as short circuits.
  - ✓ Calculate the voltage gain A_v.

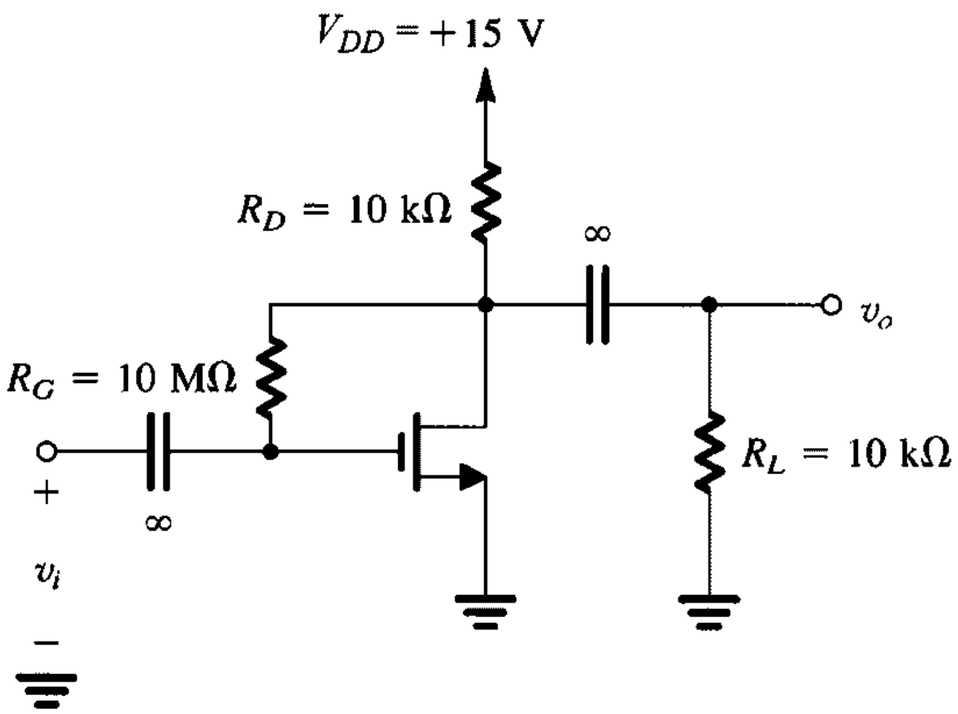

Example (Continue: DC analysis)

- ✓ $(K = 0.25\frac{mA}{V^2}, V_t = 1.5)$
- ✓ $I_G = 0 \rightarrow V_{GS} = V_{DS}$
- ✓ $V_{DS} = 15 - 10000 I_{DS}$
- ✓ Cut off Assumption:
  - ✓ $I_{DS} = 0 \rightarrow V_{DS} = 15$
  - ✓ $V_{GS} = 15 > V_t$ ×
- ✓ Saturation Assumption:
  - ✓ $I_{DS} = 0.125(V_{GS} - 1.5)^2 \rightarrow I_{DS} = 1.06mA$
  - ✓ $V_{GS} = V_{DS} = 4.4V$
  - ✓ $g_m = k(V_{GS} - V_t) = 0.725mA/V$

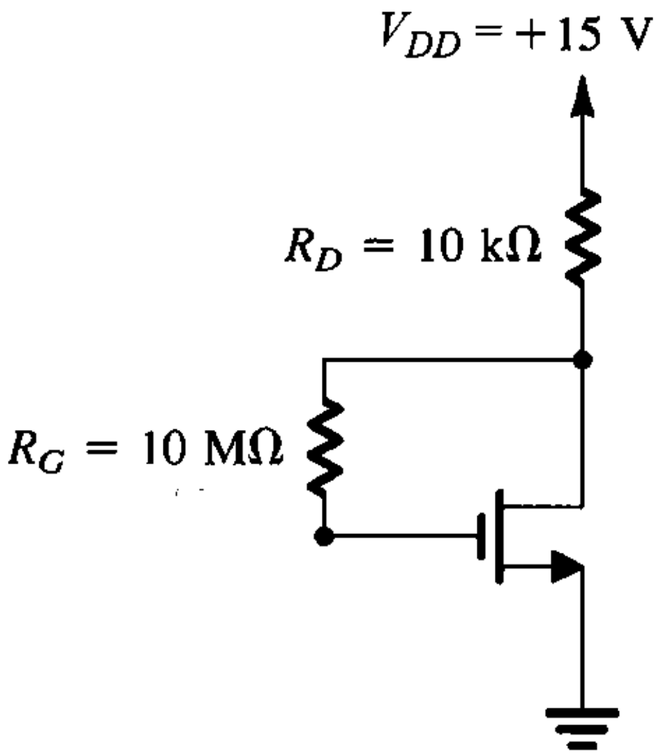

Example (Continue: AC analysis)

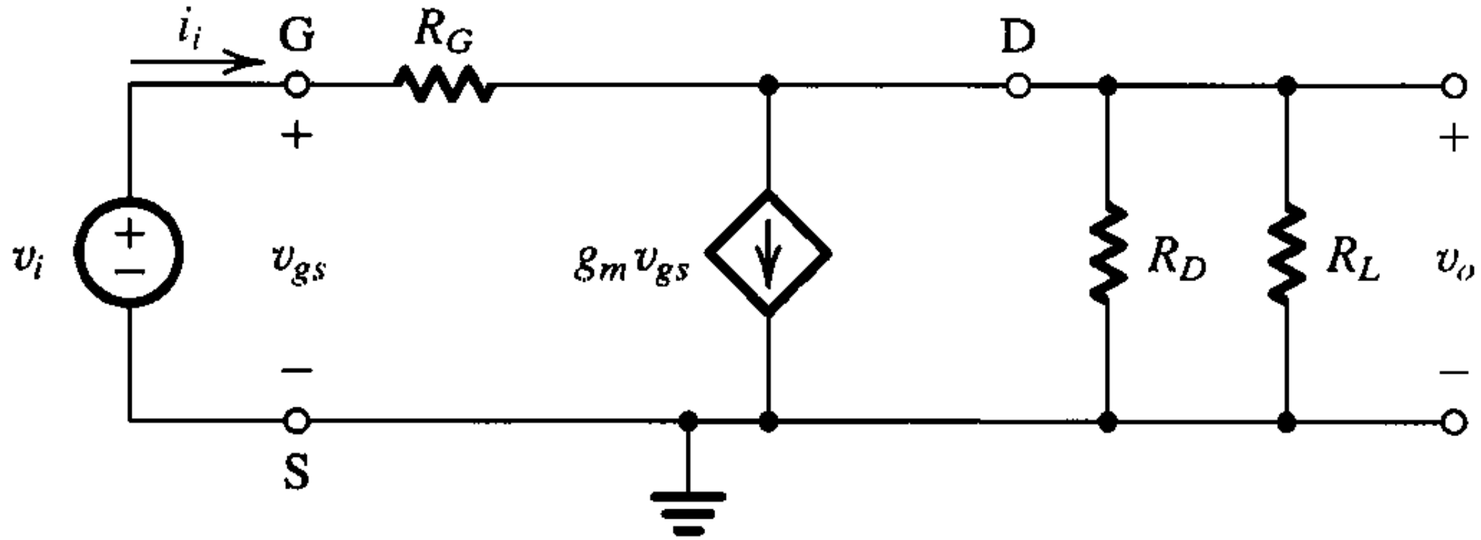

- ✓ $R'_L = R_D || R_L = 5K$
- ✓ $v_o = R'_L(i_i - g_m v_i)$
- ✓ $v_i = R_G i_i + v_o$
- ✓ $\rightarrow A_v = \frac{v_o}{v_i} = \frac{1-g_m R_G}{1+R_G/R'_L} \approx -g_m R'_L = -3.625$

Different Configurations of MOSFET

- ✓**Common Source (CS):**
  - ✓Applications: Amplifiers.
- ✓**Common Drain (CD) or voltage Follower:**
  - ✓Applications: Buffer stages in amplifiers.
- ✓**Common Gate (CG):**
  - ✓Applications: High-frequency amplifiers.

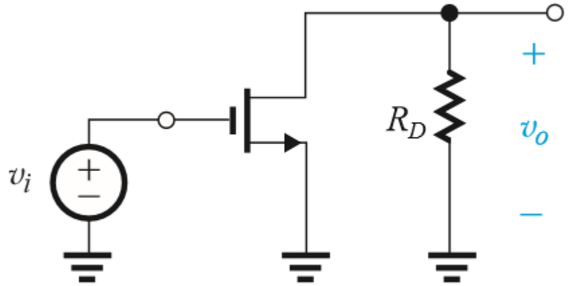

(a) Common Source (CS)

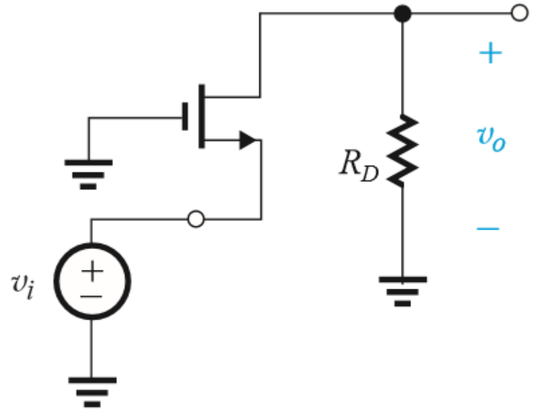

(b) Common Gate (CG)

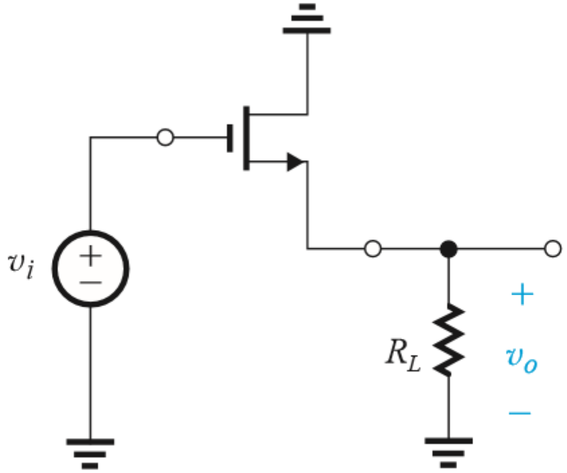

(c) Common Drain (CD)

MOSFET as a Switch

In Example 3: Circuit Behavior

- $v_i = 0 \rightarrow v_o = 12$
- $v_i = 12 \rightarrow v_o = 2.2$

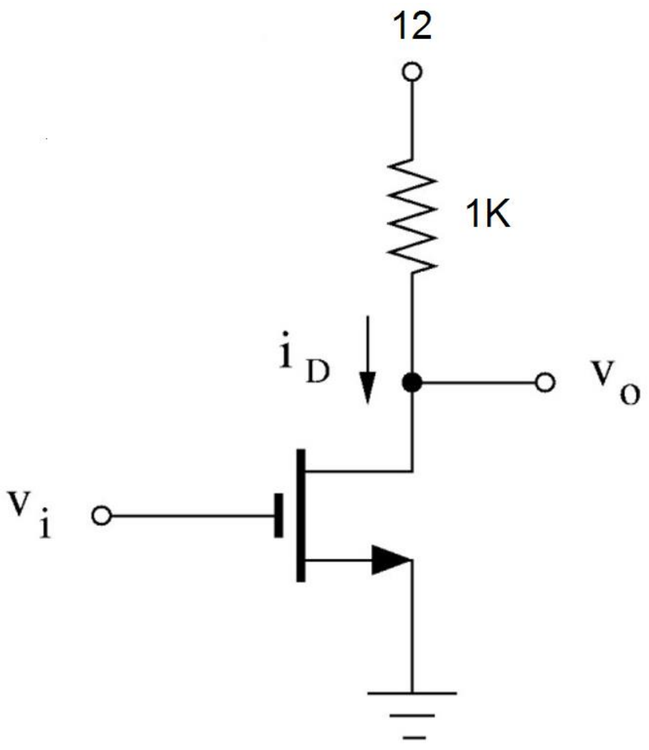

MOSFET Operation as a Switch

- For low v_i (v_i is close to 0): The MOSFET is in the cutoff region (OFF state)
  - The output voltage v_o remains high ($v_o \approx 12$).
- For high v_i (v_i is sufficiently large): The MOSFET enters the linear region (ON state)
  - The output voltage v_o drops ($v_o \approx 2.2$).

Inverter Behavior

This circuit acts as an inverter, where the output voltage is the logical inverse of the input voltage:

- When v_i = 0, v_o = 1 (logical high).
- When v_i = 1, $v_o \approx 0$ (logical low).

Class Exercise 1: Common Source

- Determine g_m.
- Calculate the voltage gain ($A_v = \frac{v_o}{v_i}$).

$V_T = 0.8V, K = 0.4mA/V^2$

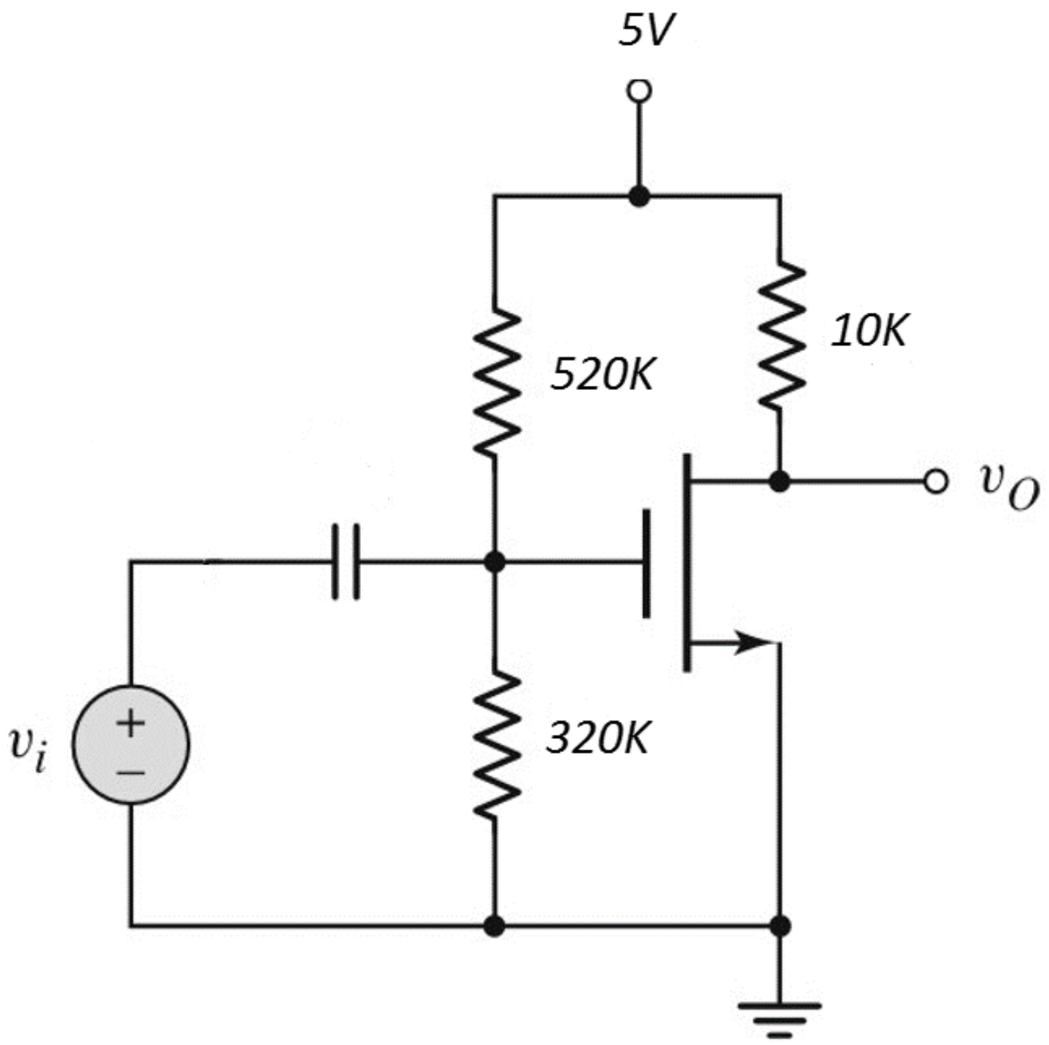

Answer: $g_m = 0.44mA/V$, $A_v = -4.4$

Class Exercise 2: Common Source

- Determine g_m.
- Calculate the voltage gain ($A_v = \frac{v_o}{v_i}$).

✓ $V_T = 0.6V, K = 1mA/V^2$

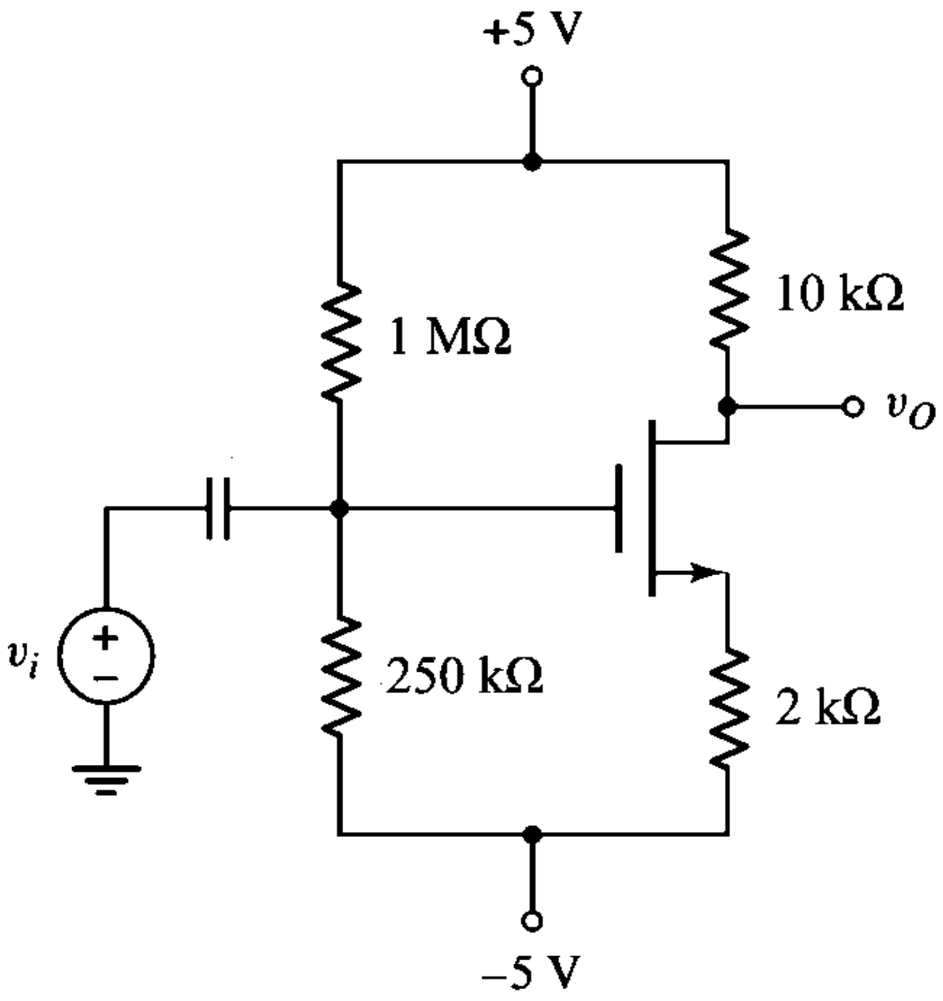

Answer: $g_m = 0.78mA/V$, $A_v = -3$

Class Exercise 3: Common Source

- Determine the resistance R_D and the operating condition of the transistor.

- $V_T = 0.8V, K = 0.24mA/V^2$
- $I_Q = 250\mu A, V_D = 2.5V$

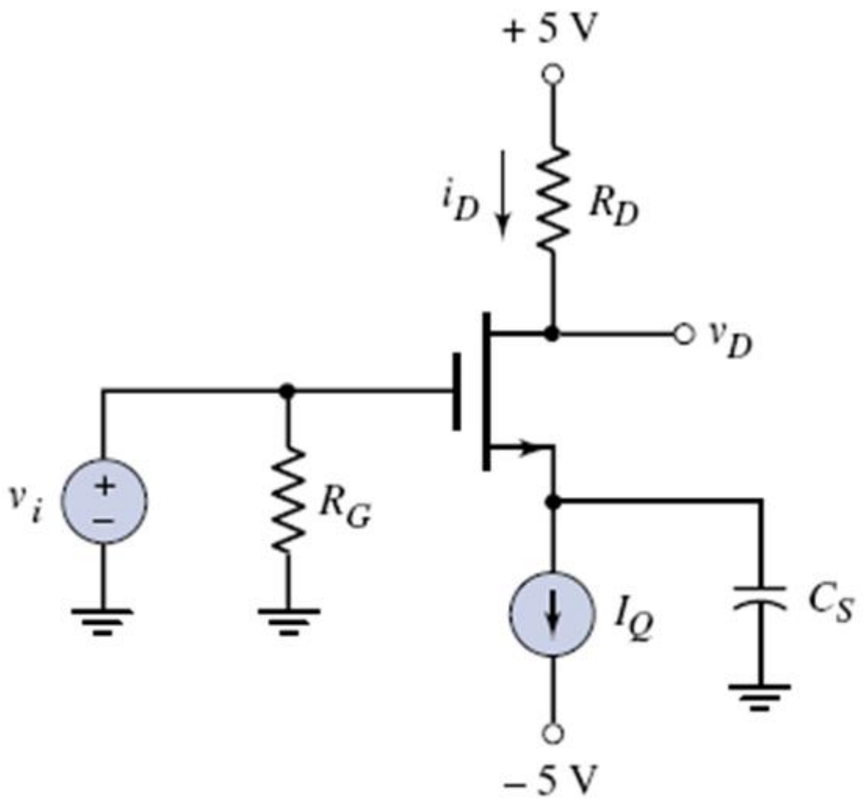

Answer: $R_D = 10K\Omega$, saturation

Class Exercise 4: Common Drain

- Determine g_m.
- Calculate the voltage gain ($A_v = \frac{v_o}{v_i}$).
- $V_T = 0.8V, K = 0.5mA/V^2$

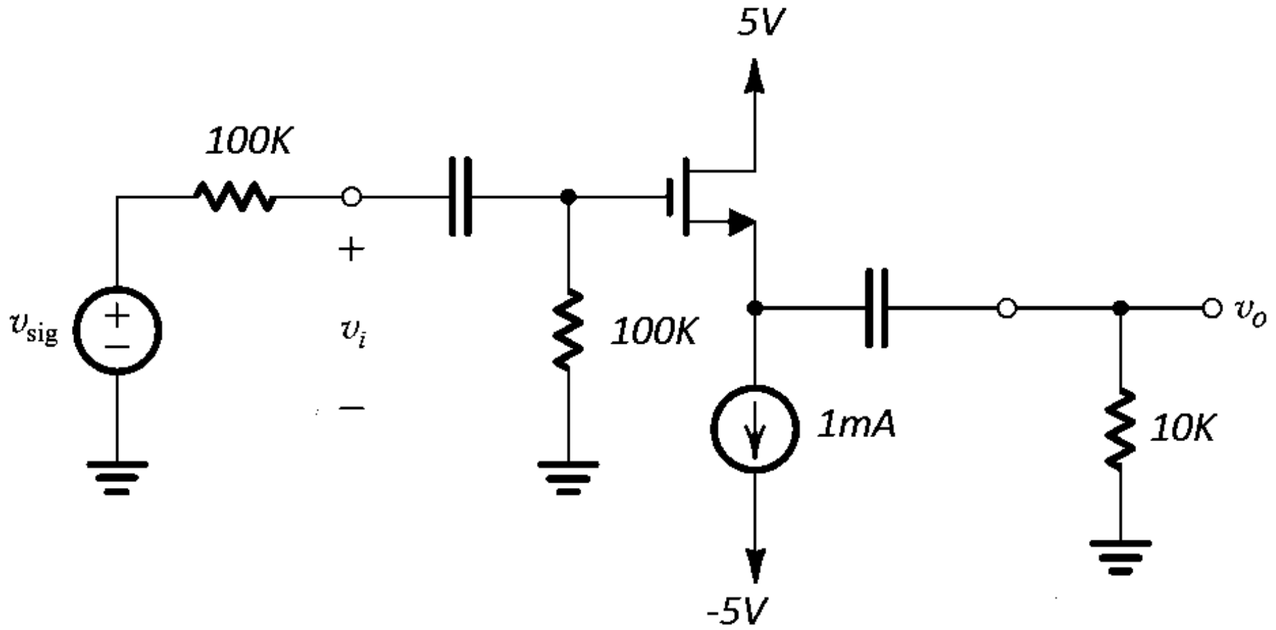

Answer: $g_m = 1mA/V$, $A_v = 0.45$

Input and Output Resistance

In an amplifier, it is typically desired to have:

- ✓ A **high input resistance** R_i to ensure that $v_i \approx v_s$.
- ✓ A **low output resistance** R_o to ensure that $v_o \approx A_v v_i$.

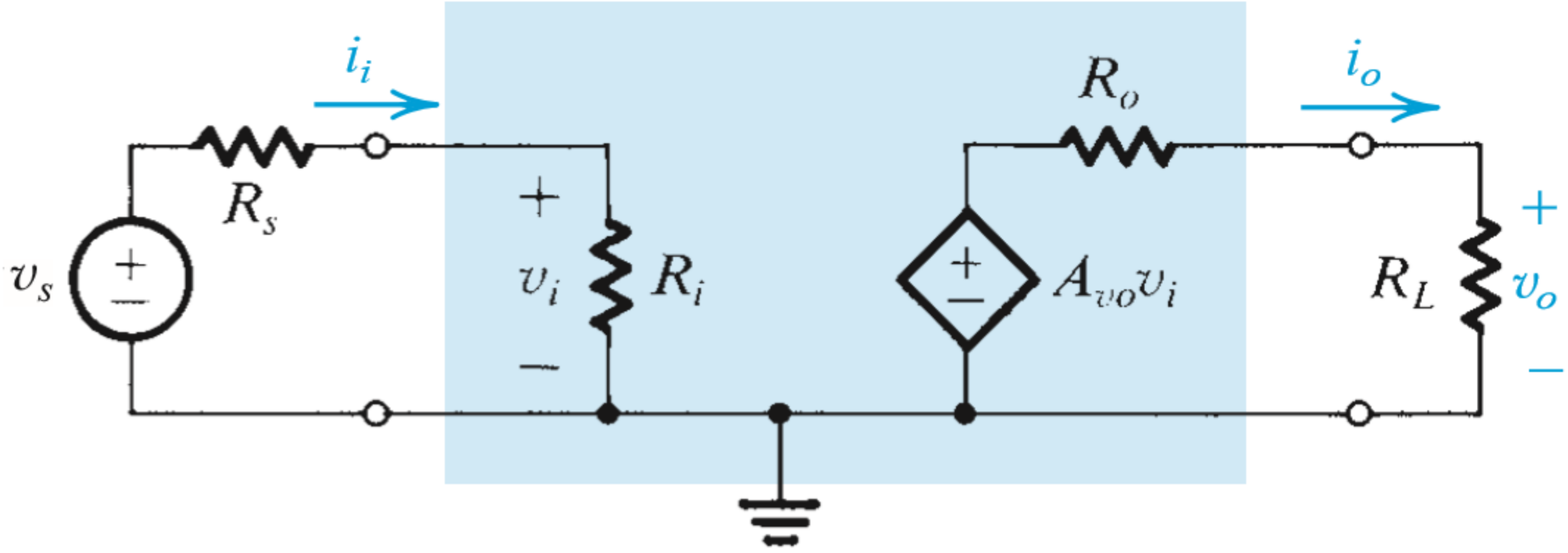

Class Exercise 5

- Find g_m and A_v
- Find R_{in}, R_o
- $V_T = 0.8V, K = 0.5mA/V^2$

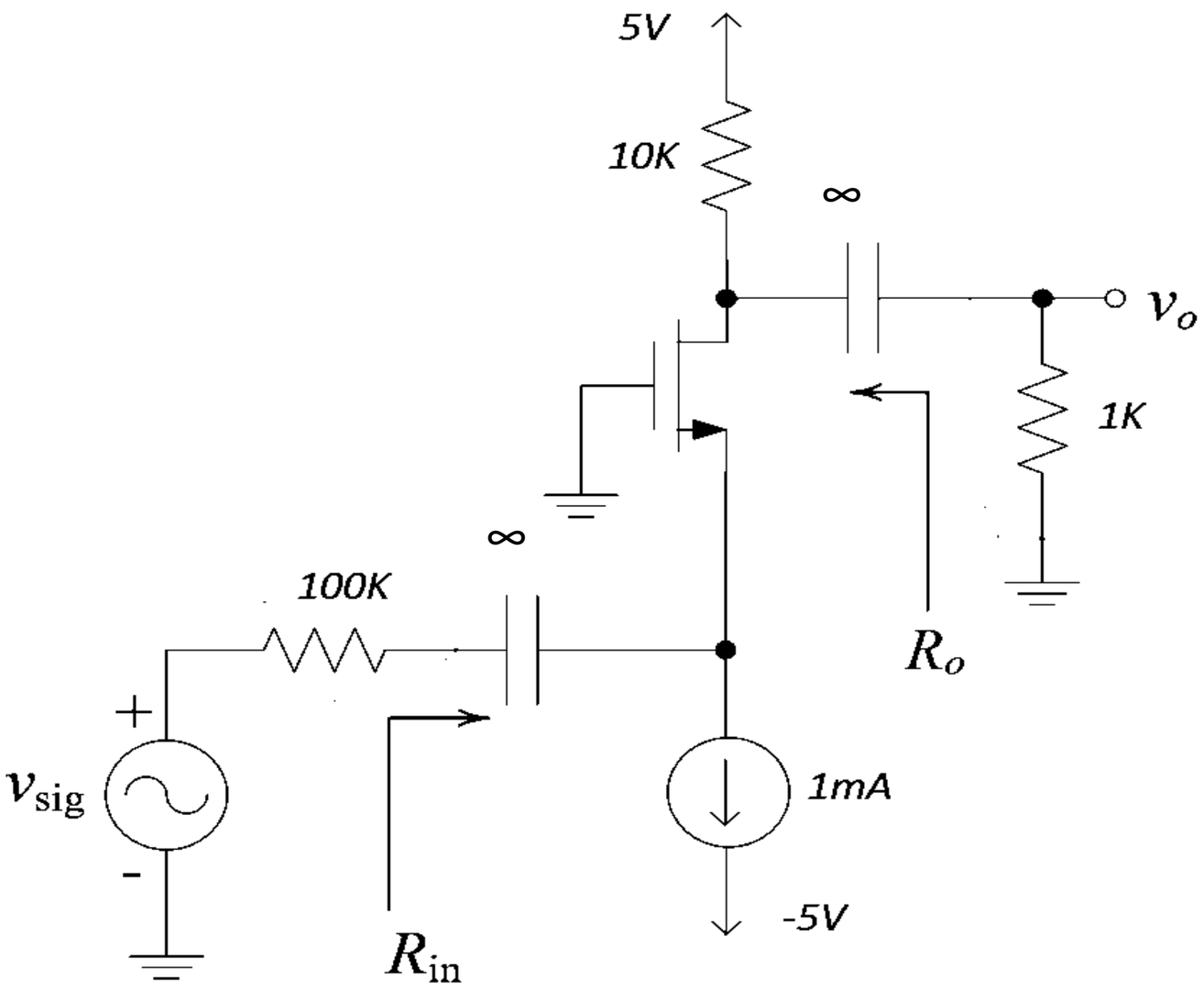

NMOS Inverter with Resistive Load

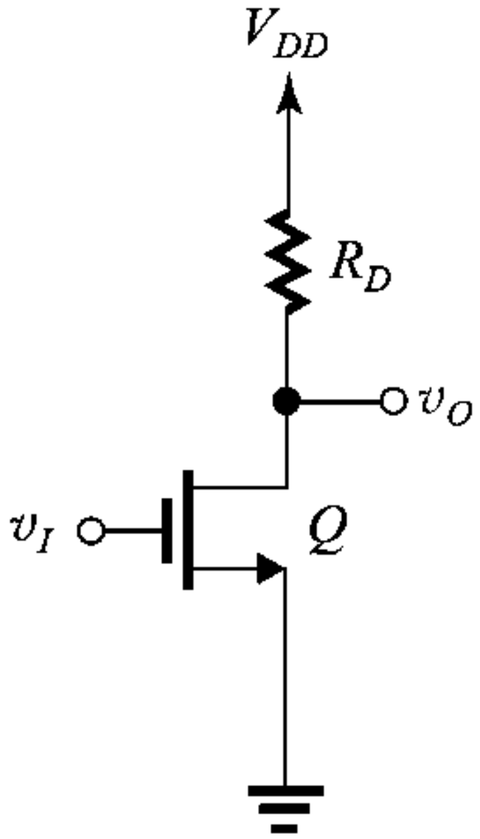

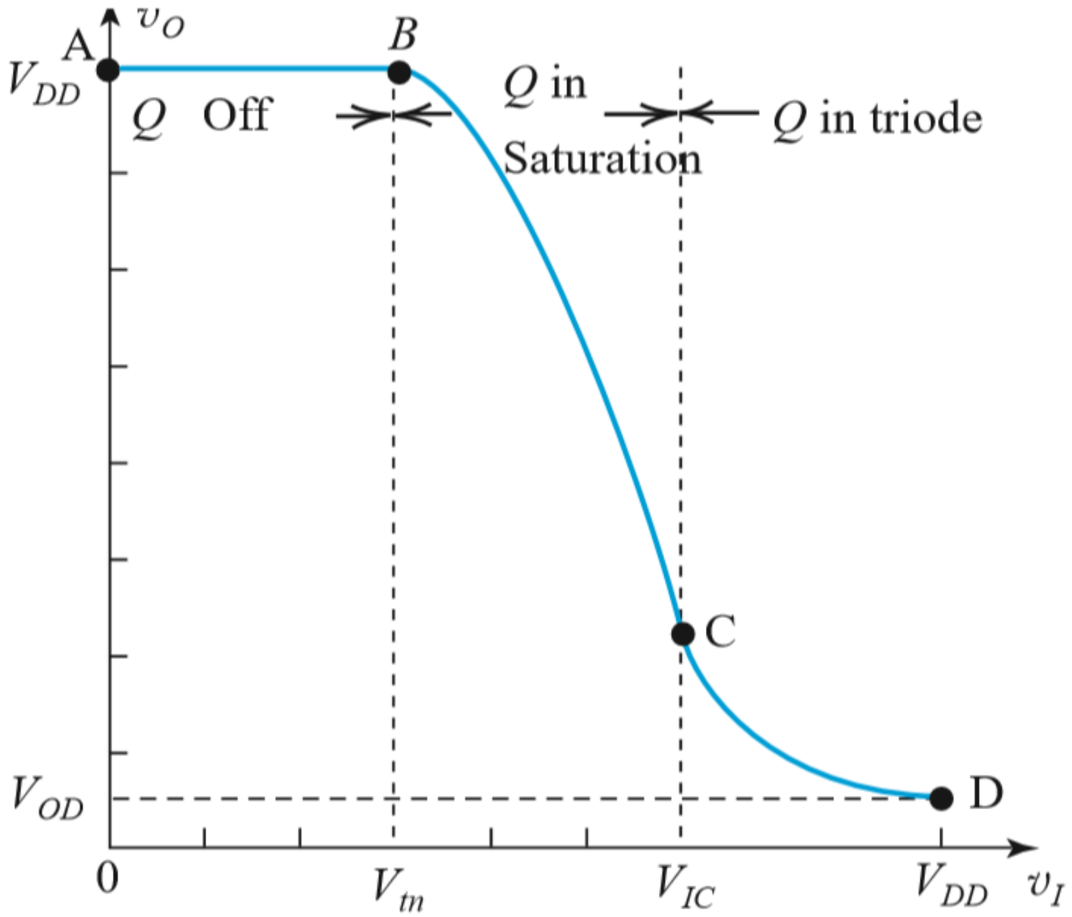

CMOS Inverter Gate:

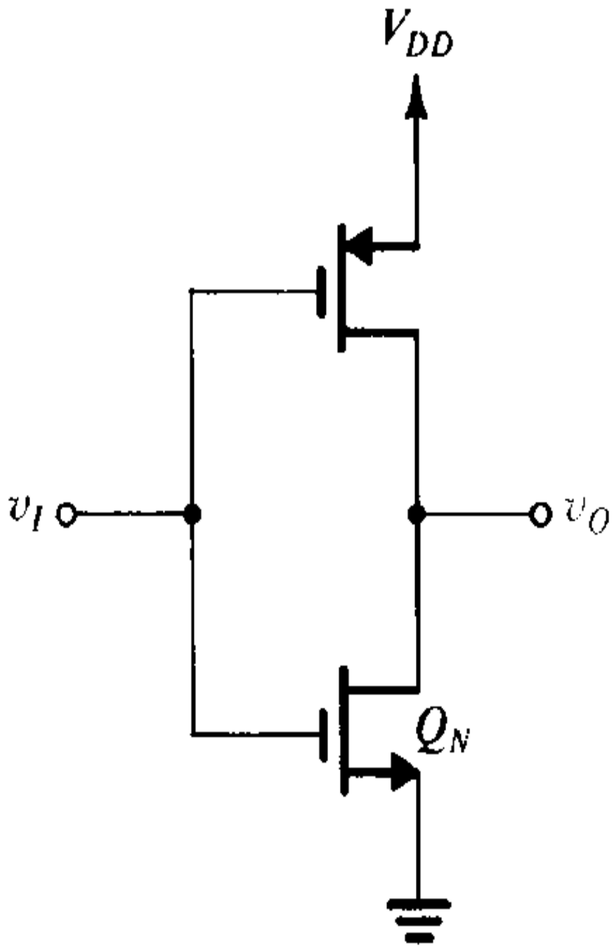

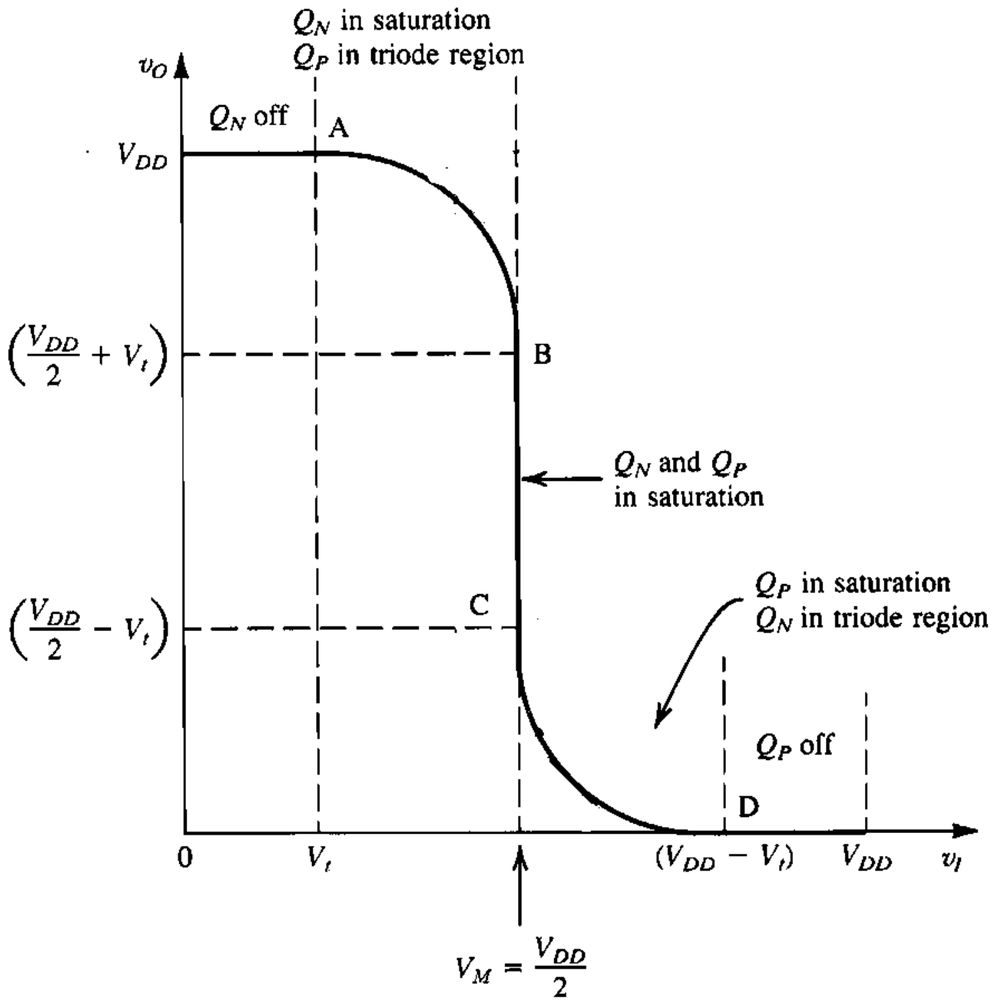

Thanks

دانشگاه صنعتی امیرکبیر
(پلی تکنیک تهران)

Electrical and Electronic Circuits

chapter 13. Operational Amplifier

Afarghadan@aut.ac.ir

عظیم فرقدان

مهر ۱۴۰۳

Objectives of the Lecture

- Introduction to Operational Amplifiers
  - Precise Model of Operational Amplifiers
  - Ideal Model
  - Applications of Operational Amplifiers
    - Inverting Amplifier
    - Non-Inverting Amplifier
    - Voltage Follower (Buffer)
    - Multi-Stage Amplifier
    - Ideal Voltage and Current Sources
- Comparator Circuit
- Several Examples

Operational Amplifier (Op-Amp)

- The **Operational Amplifier (Op-Amp)** is an integrated circuit (IC) widely utilized as an amplifier in various applications.
- Its origins date back to the 1940s when it was employed in analog computational circuits for constructing adders, sub tractors, and analog multipliers.

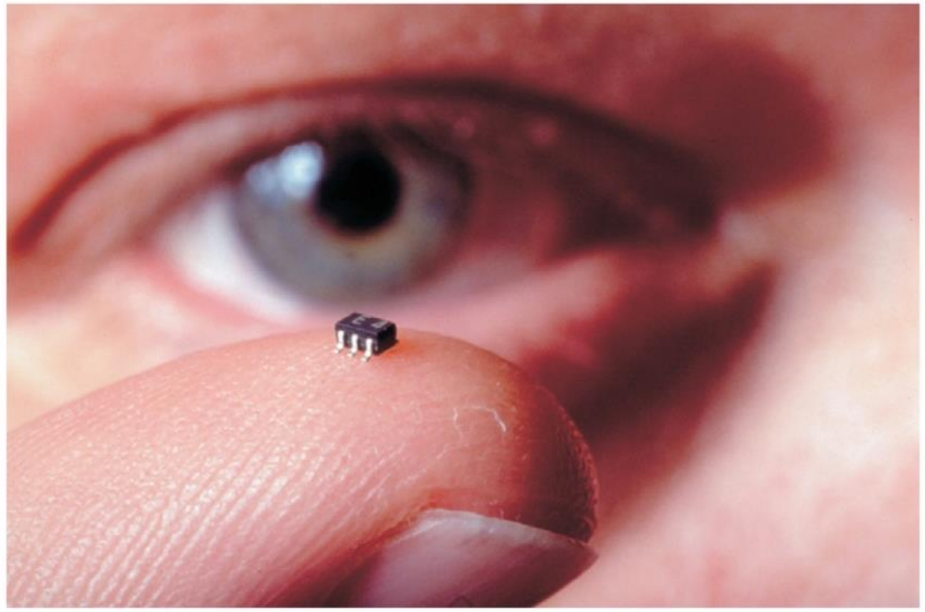

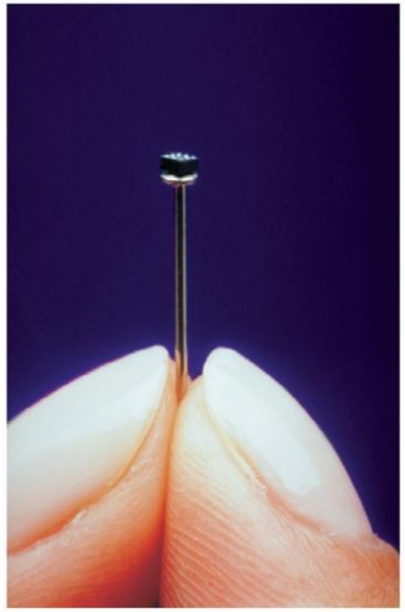

The Internal Circuit of a Typical Operational Amplifier

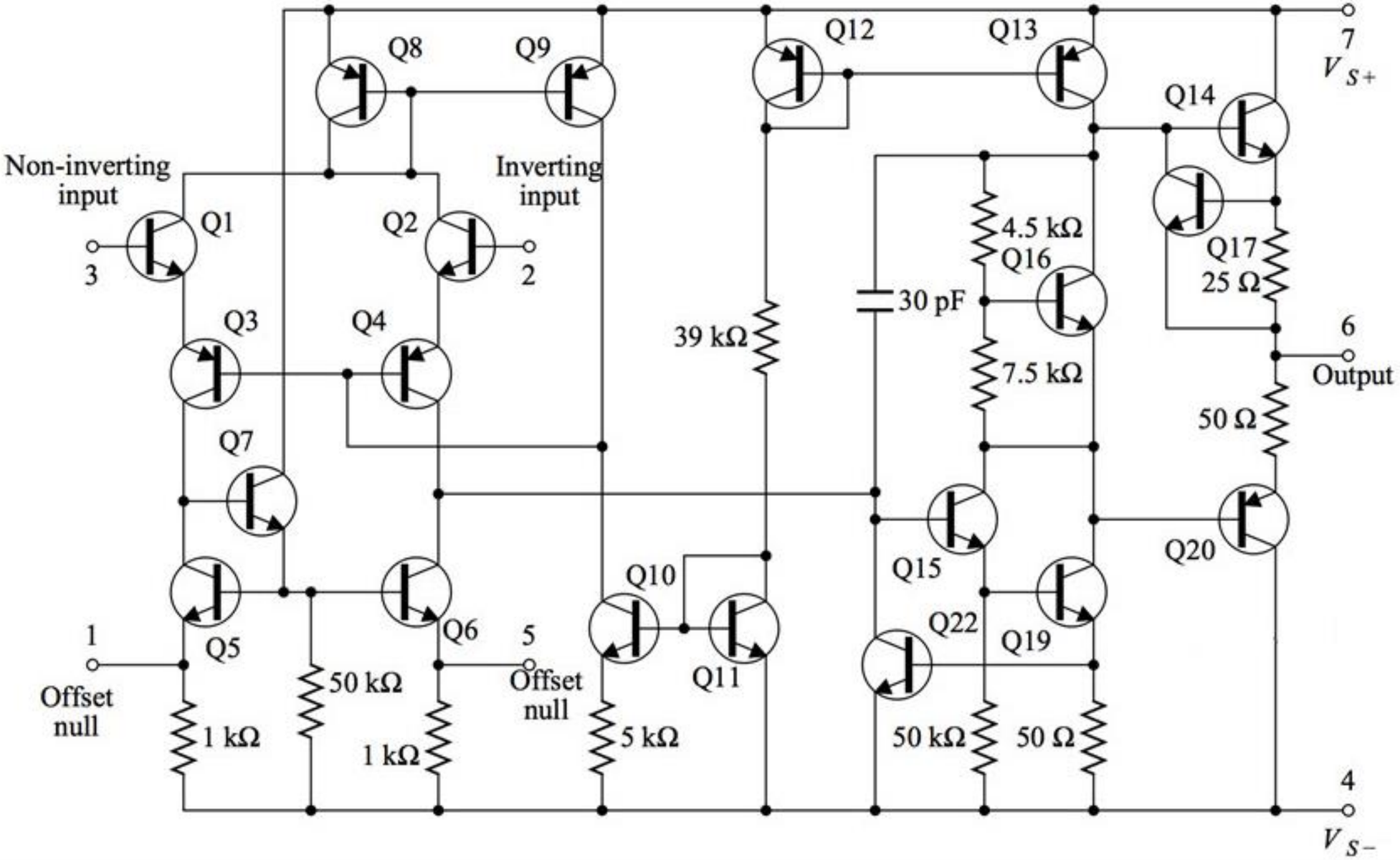

Nonlinear Behavior of the Diode

- An operational amplifier (Op-Amp) is generally represented by the following symbol and includes the following pins:

- **Input Pins**: $Input$
- **Output Pin**: $Output$
- **Power Supply Pins**: V^+, V^-
- **Offset Adjustment Pins**: $Offset$

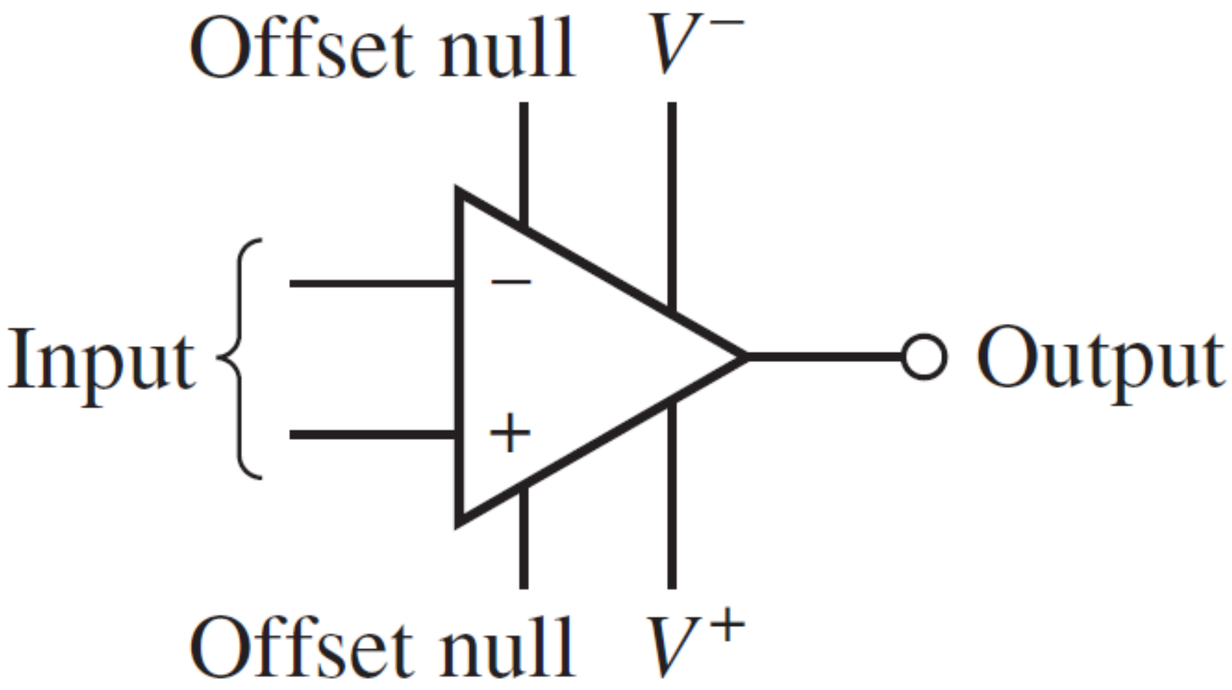

Op-Amp Symbol

- ✓ Let us focus on the **input** and **output pins**, assuming the other pins are connected to appropriate voltage levels.
- ✓ An operational amplifier functions as a **differential amplifier**, meaning it amplifies the difference between its input signals.

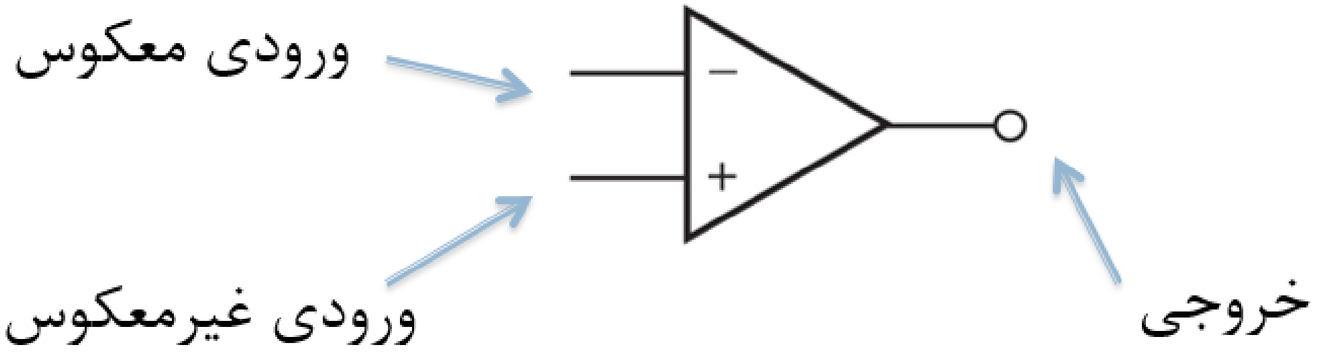

Precise Model of an Op-Amp

- A circuit that operates as a voltage amplifier can be modelled using the following equivalent circuit.
- This model includes:
  - **Input Resistance (R_i)**
  - **Output Resistance (R_o)**
  - **Open-Loop Gain (A)**

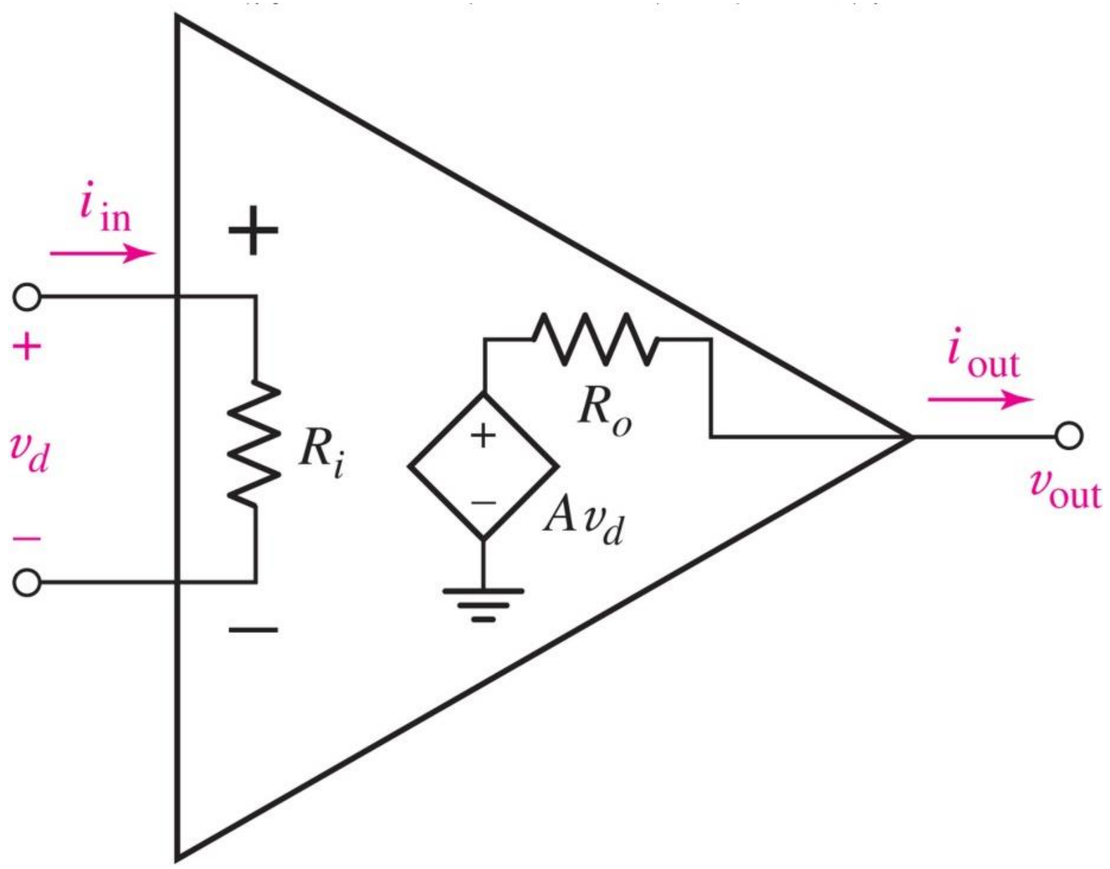

Example: Using the Precise Model to Analyse an Inverting Amplifier

✓ In the circuit below, what is the gain of the amplifier?

- KCL_1: $\frac{-v_d - v_{in}}{R_1} + \frac{-v_d - v_{out}}{R_f} + \frac{-v_d}{R_i} = 0$

- KCL_2: $\frac{v_{out} + v_d}{R_f} + \frac{v_{out} - Av_d}{R_o} = 0$

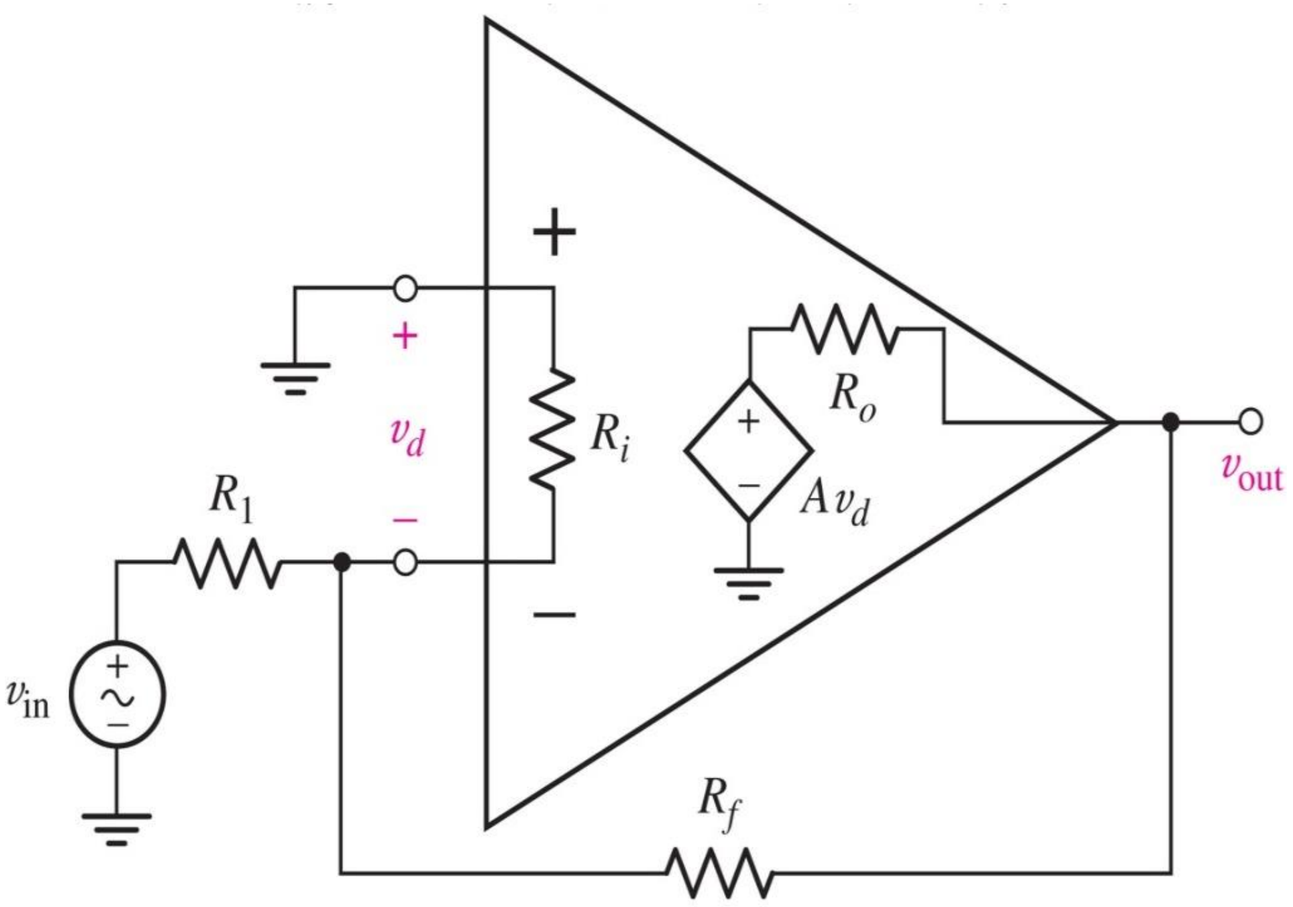

Example: Using the Precise Model to Analyse an Inverting Amplifier

✓ By solving the system of equations and eliminating v_d, we obtain:

➢ $A_v = \frac{v_{out}}{v_i} = \left[\frac{R_o+R_f}{R_o-AR_f}\left(1+\frac{R_1}{R_f}+\frac{R_1}{R_i}\right)-\frac{R_1}{R_f}\right]^{-1}$

➢Example Solution for the Inverting Amplifier Using LM741 Specifications

➢ $A = 200000$

➢ $R_i = 2M\Omega$

➢ $R_o = 75\Omega$

➢ If $R_f = 47$ and $R_1 = 4.7$

➢ Then: $A_v = -9.999$

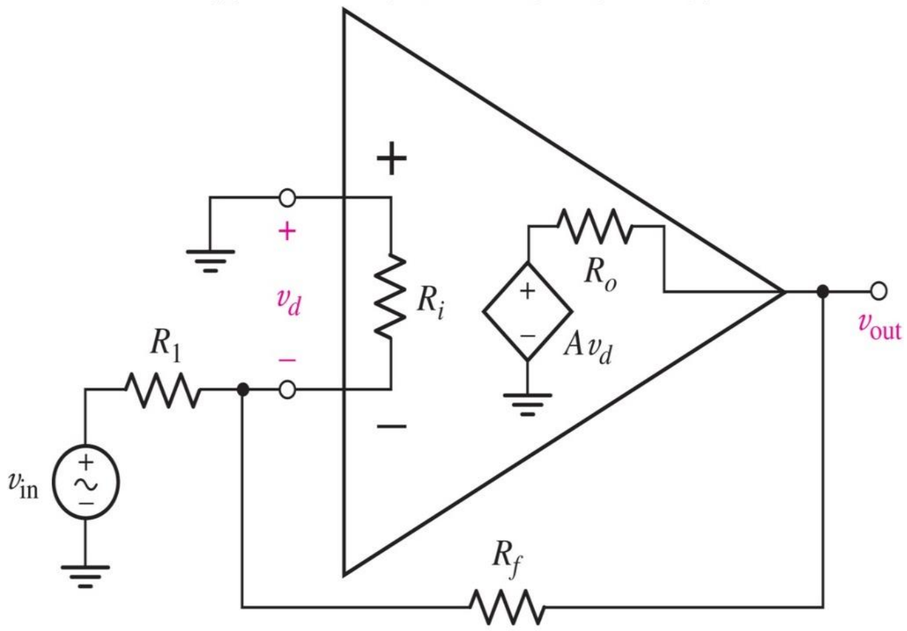

Advantages of Using an Op-Amp as a Voltage Amplifier

- ✓ **High Input Resistance**:(in the range of mega-ohms to tera-ohms)
  - ➢ To ensure that the maximum voltage of the source is applied across its input.
- ✓ **Low Output Resistance**:(in the range of a few ohms to a few tens of ohms)
  - ➢ to ensure that the entire output voltage of the amplifier is delivered to the load.
- ✓ **Adjustable Gain**:(achieved by applying feedback resistance):
  - ➢ As observed in the circuit shown, provided that A is sufficiently large, the gain of the amplifier can be approximated with high accuracy as $Av \approx -\frac{R_f}{R_1}$.

Ideal Model

- In the ideal case, when $A = \infty$, $R_i = \infty$, and $R_o = 0$, the behaviour of the operational amplifier can be described as follows:
- Since v_{out} has a finite value (it cannot exceed the supply voltage), $v_d = \frac{v_{out}}{A} \approx 0$.
- As a result, $i_{in} \approx 0$.

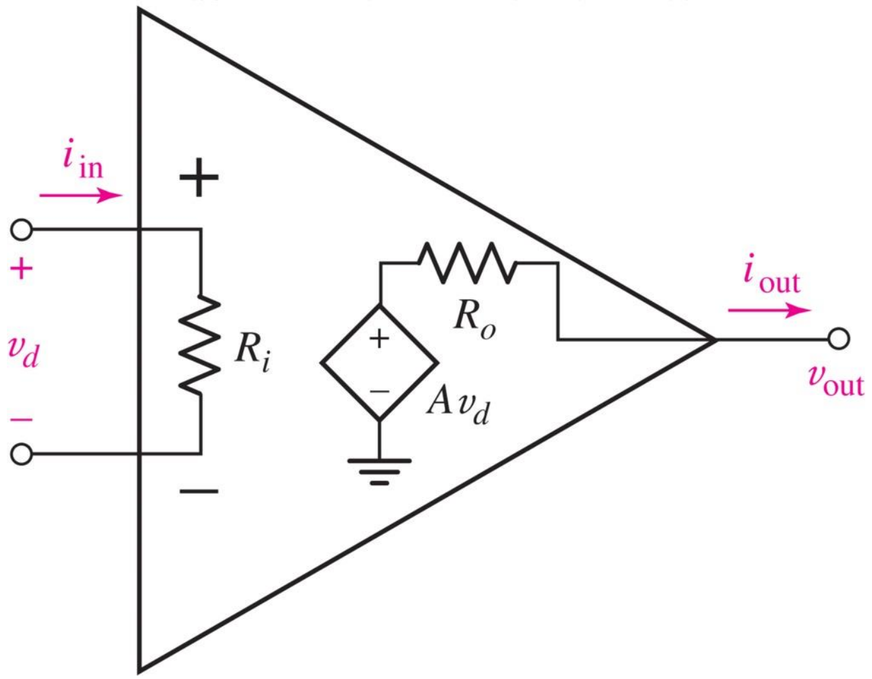

Ideal Model

Rules of the Ideal Model:

1.No current flows through the input terminals.

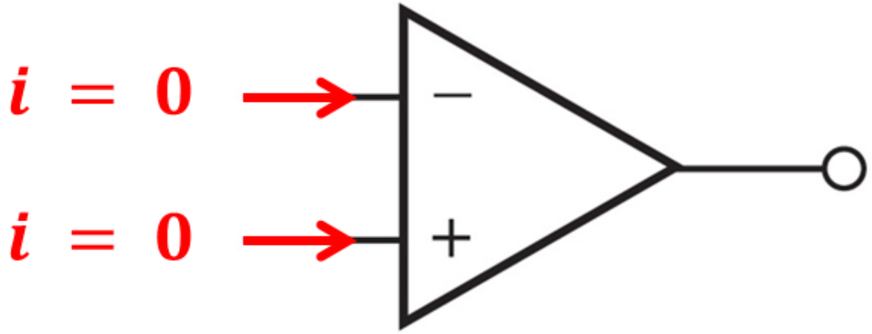

2.The voltage difference between the two input terminals is zero.

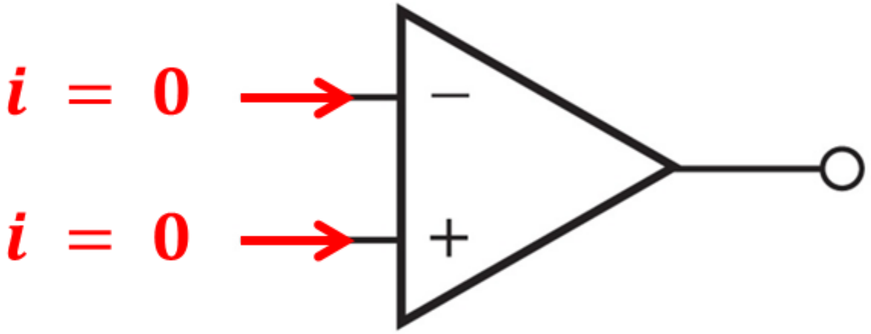

Inverting Amplifier

✓ By applying KVL and using the rules of the ideal operational amplifier, we have:

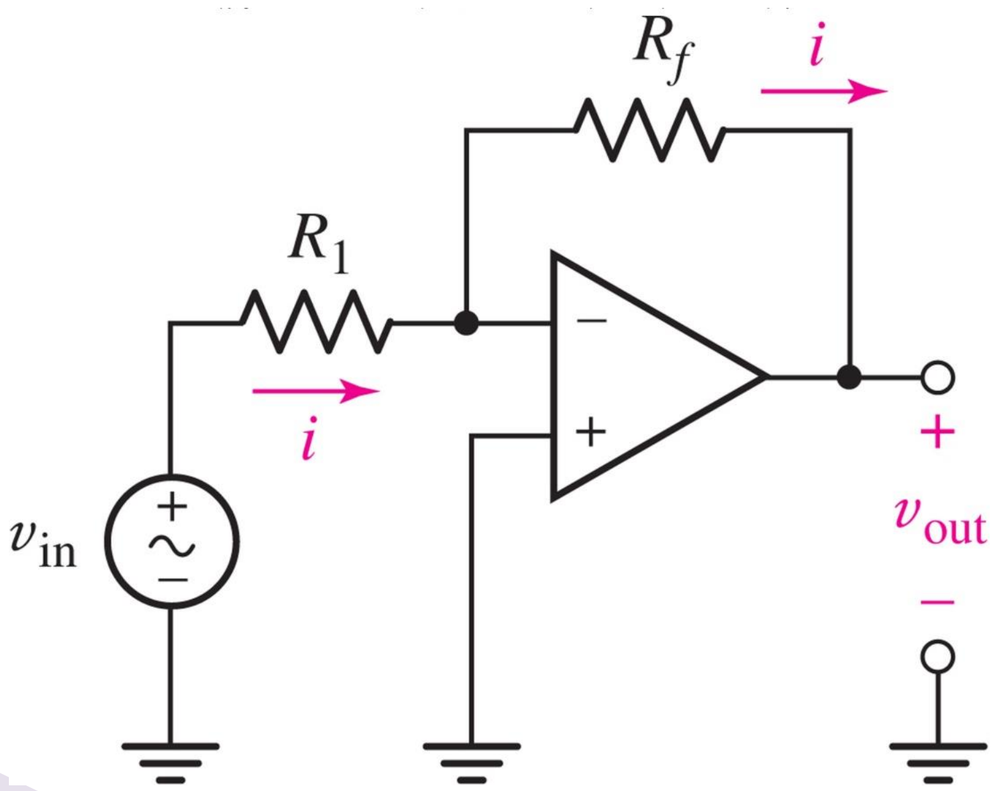

$$v_{out} = -\frac{R_f}{R_1} v_{in}$$

Non-Inverting Amplifier

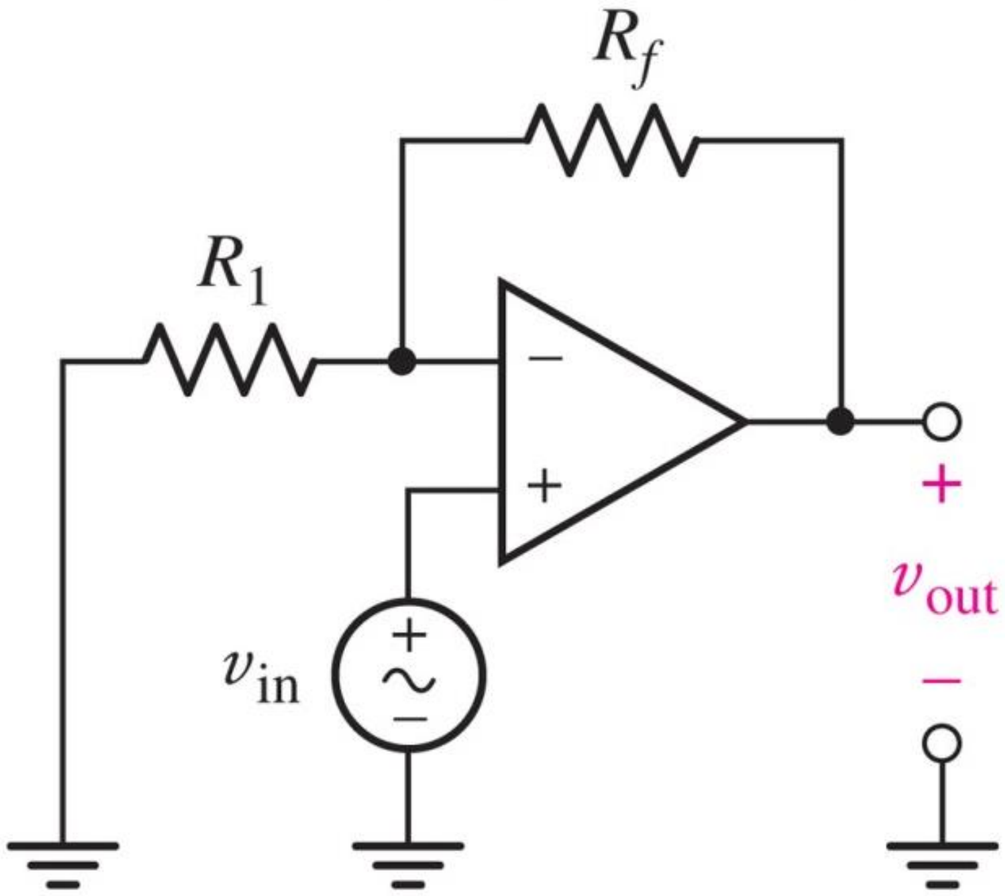

$$v_{out} = \left(1 + \frac{R_f}{R_1}\right) v_{in}$$

Example

- $v_{in}(t) = 5\sin 3t\ mV, R_f = 47K\Omega, R_1 = 4.7\text{K}\Omega$

$$\boldsymbol{v_{out}(t) = -50\ sin\ 3t\ mV}$$

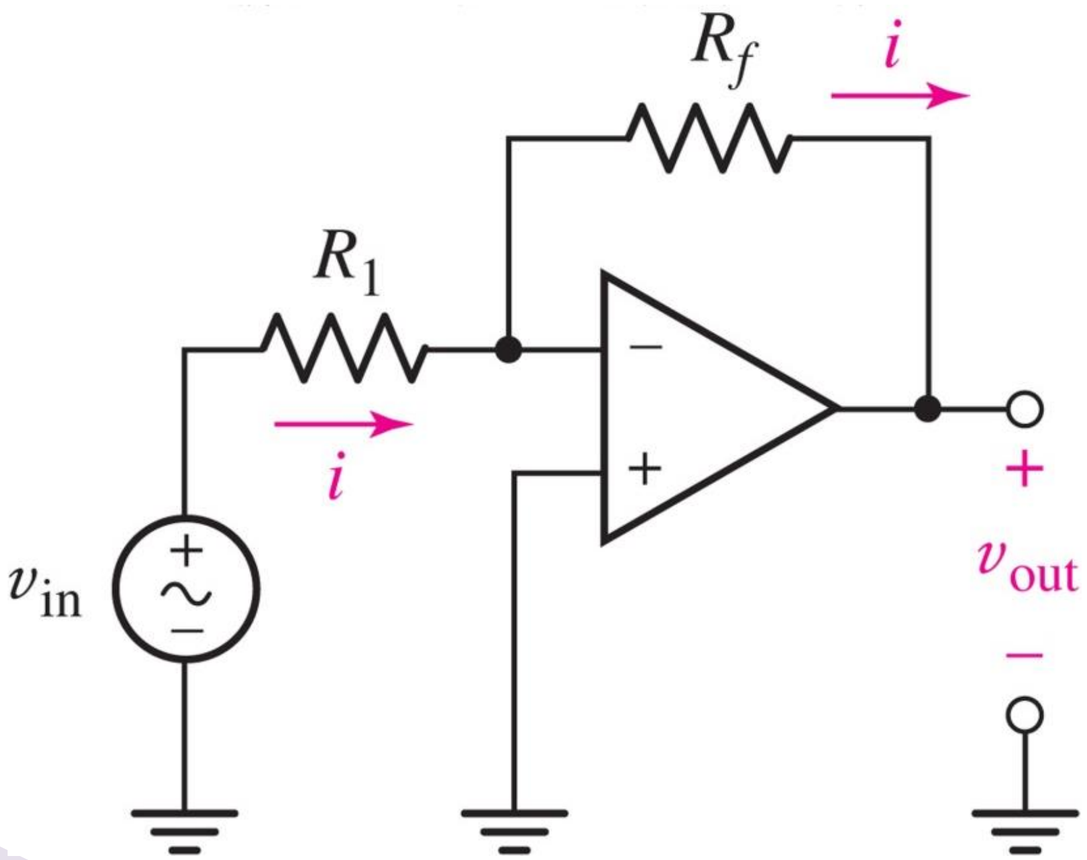

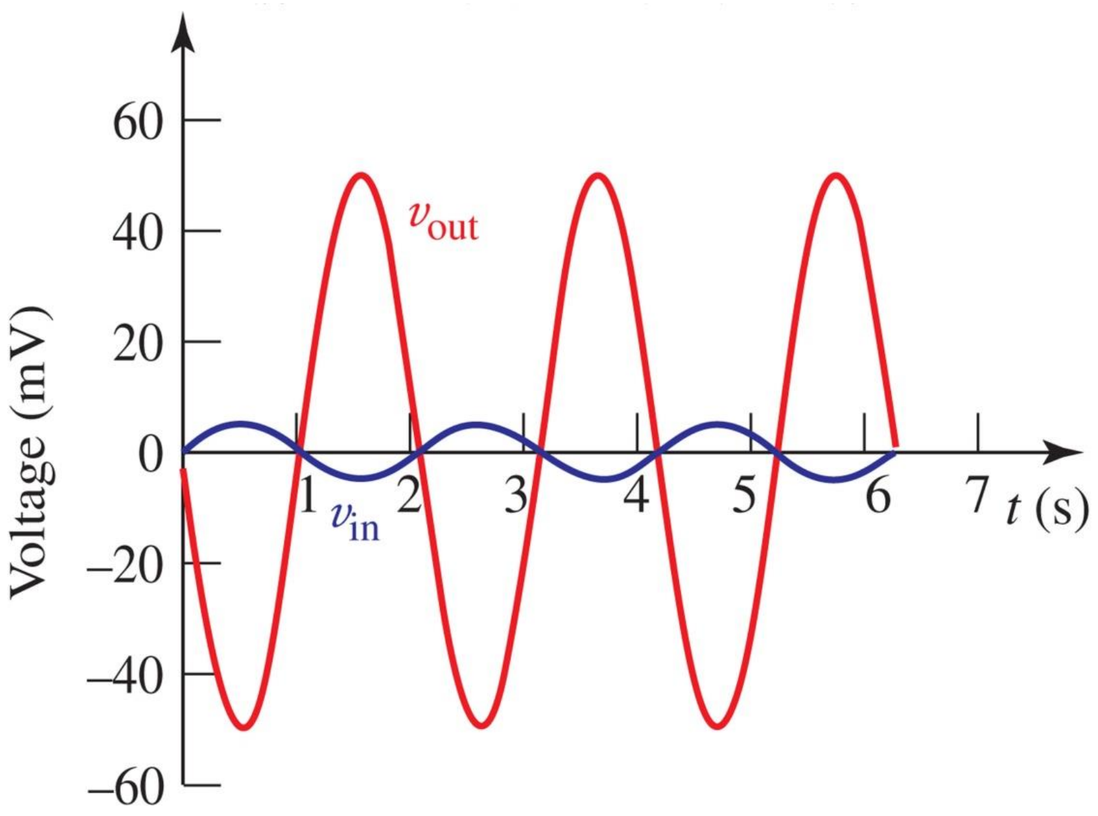

Voltage Follower (Buffer)

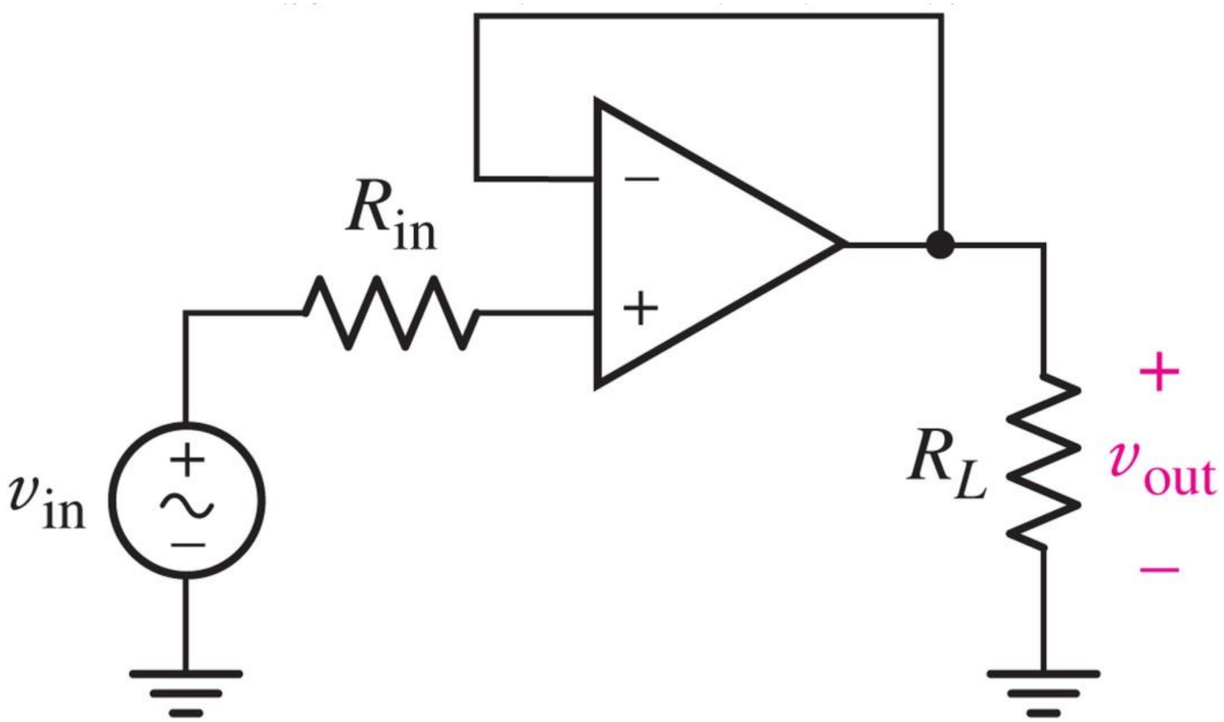

$$v_{out}(t) = vin(t)$$

1.The output voltage of the buffer is independent of the load resistance (R_L). The buffer can supply the required current to maintain a constant output voltage, even if R_L changes.

2.This circuit eliminates the effect of the source's input resistance by presenting a very high input resistance to the source and a very low output resistance to the load.

Analog Summing Circuit

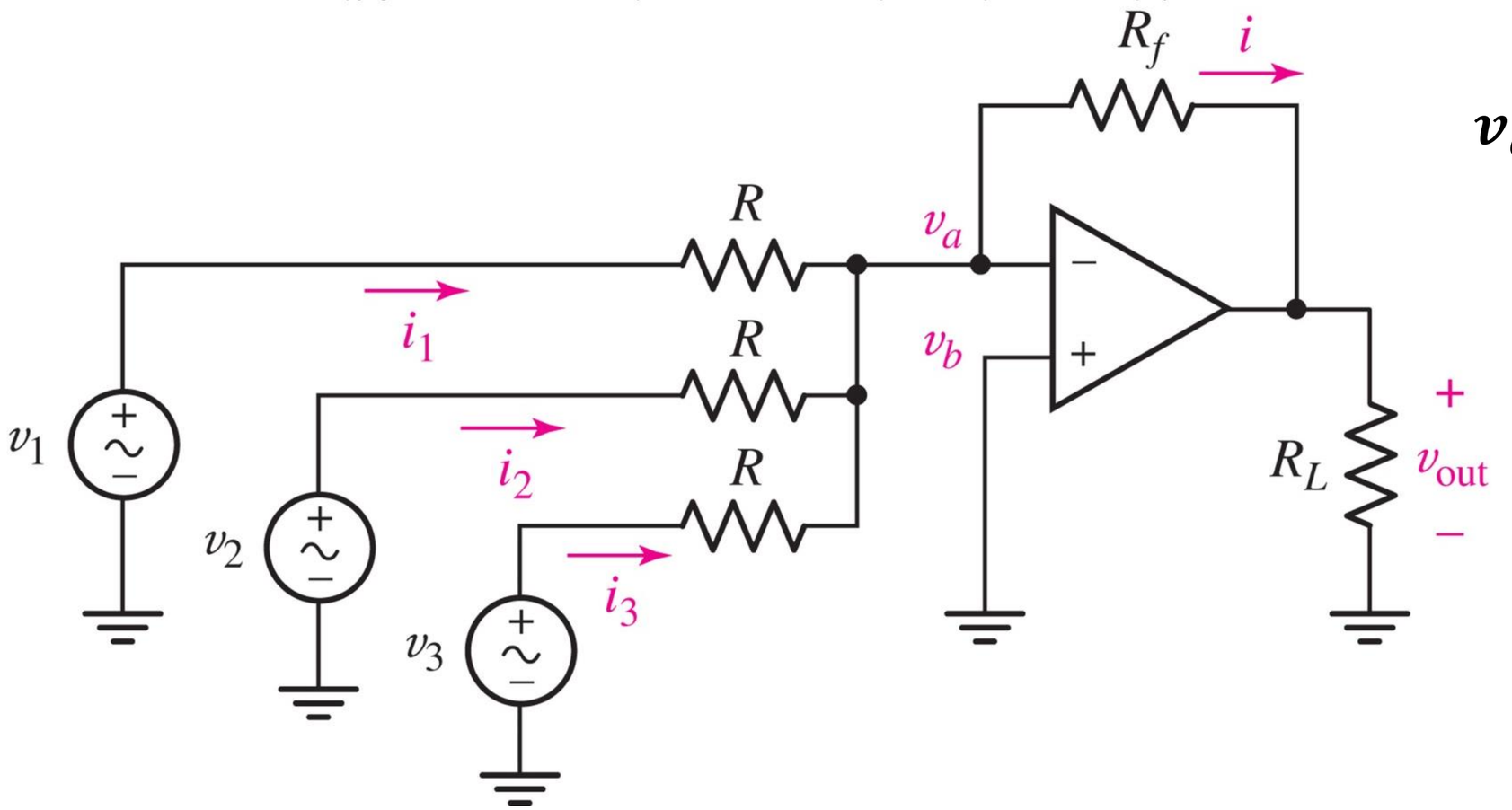

$$v_{out} = -\frac{R_f}{R_1}(v_1 + v_2 + v_3)$$

✓ This circuit performs the addition of input signals and amplifies the result by a factor of $-\frac{R_f}{R_1}$.

Cascading Multiple Operational Amplifiers

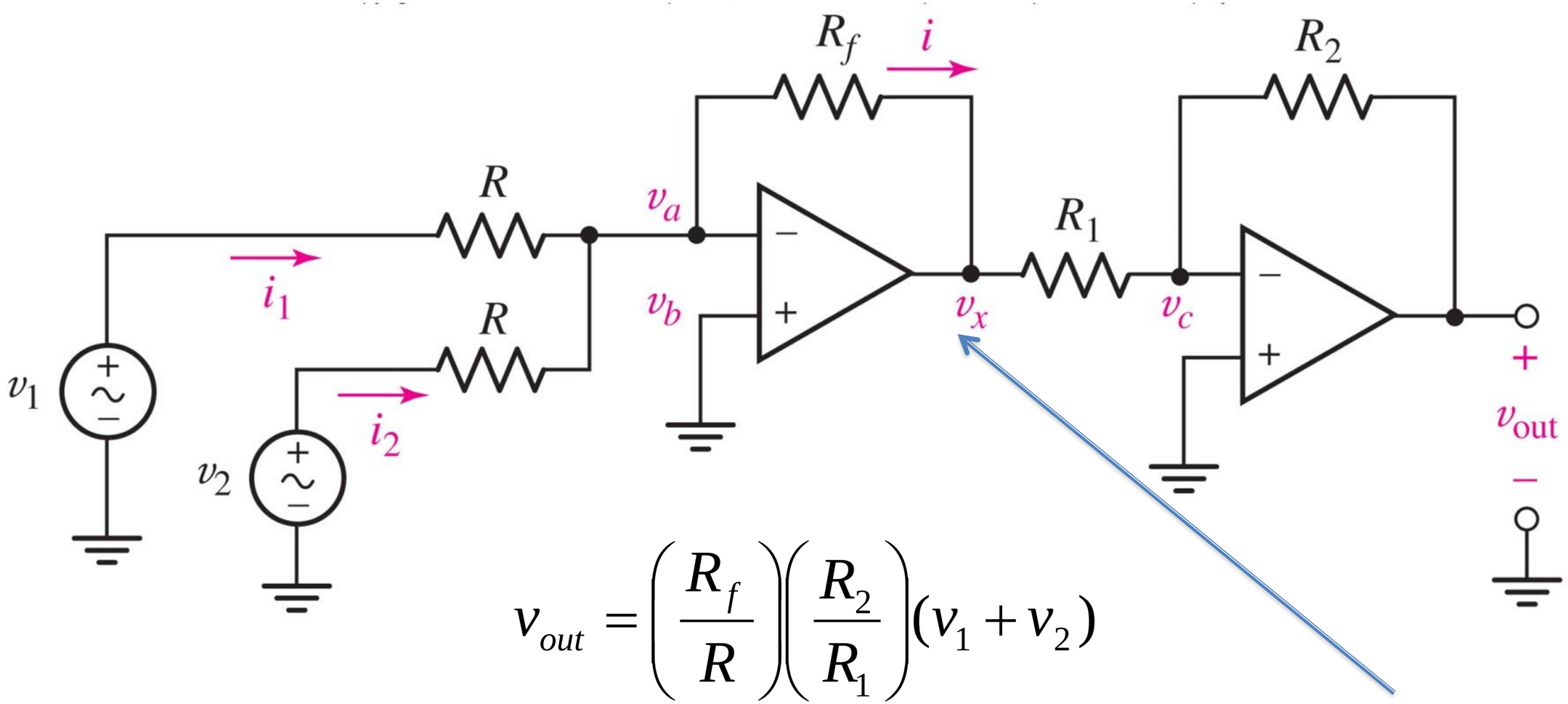

$$v_{out} = \left(\frac{R_f}{R}\right)\left(\frac{R_2}{R_1}\right)(v_1 + v_2)$$

- ✓ The output voltage of each stage is independent of the subsequent stage. **(Why?)**
- ✓ As a result, **Op-Amp** can be cascaded without any alteration in their individual gains.

Op-Amp as an Ideal Voltage Source

$$v_{out} = \left(1 + \frac{R_f}{R_1}\right) V_Z$$

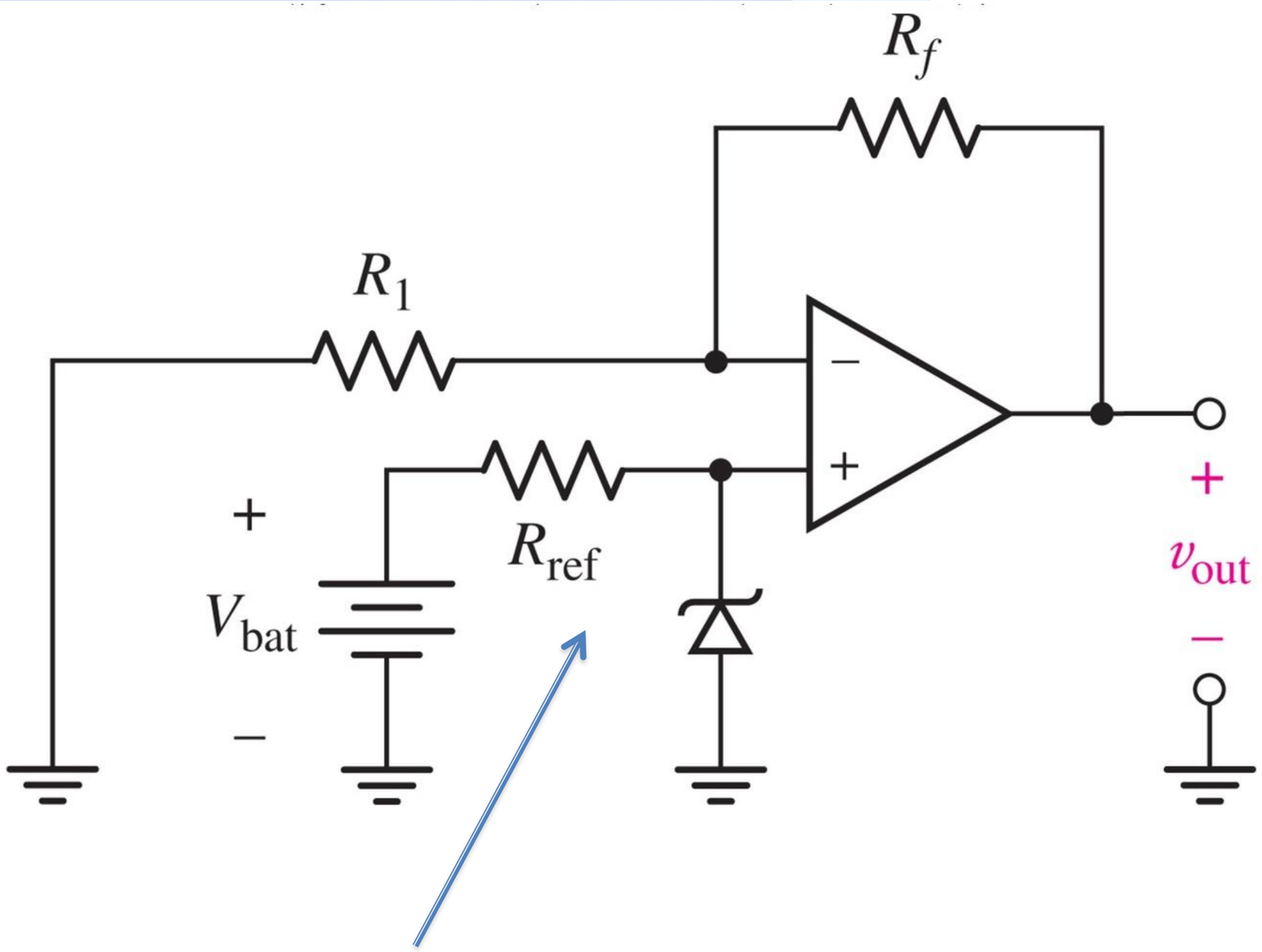

This circuit resembles the voltage regulator using a Zener diode, which we have encountered before.

Op-Amp as an Ideal Current Source

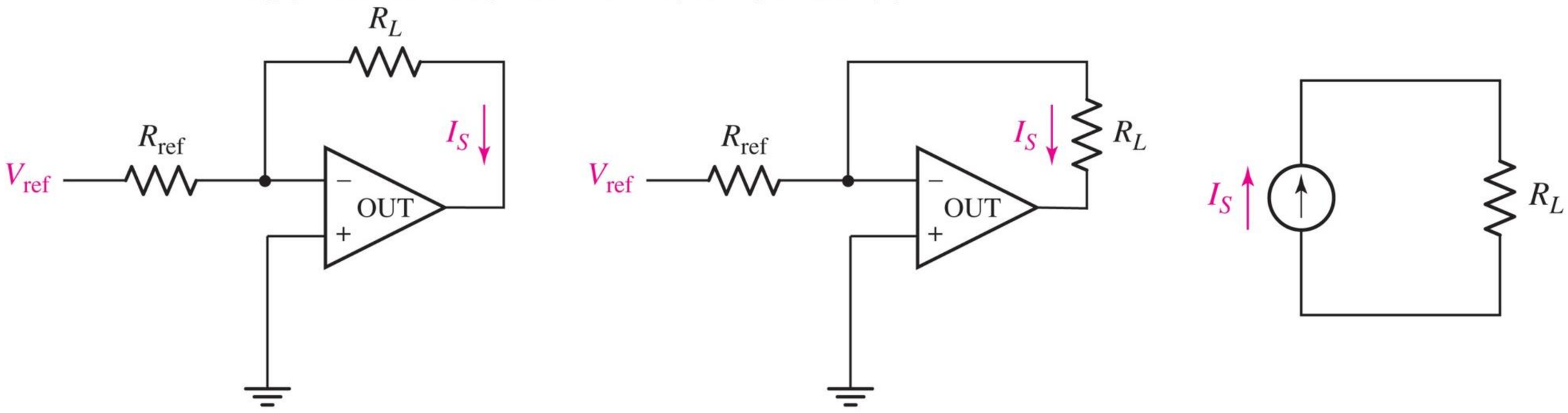

- Using a reference voltage V_{ref} and a resistor V_{ref}, an ideal current source can be constructed with a current:

$$\boldsymbol{I_S = \frac{V_{ref}}{R_{ref}}}$$

- This current is independent of the load resistance R_L,

Power Supplies for Op-Amp

- An operational amplifier requires power to function and perform amplification. Therefore, it must be connected to a power supply.
- Typically, equal and opposite voltage values are applied to the V^+ and V^- terminals. These voltage levels usually range between ±5V and ±24V.
- The ground of the power supplies must be connected to the input and output ground reference of the circuit to ensure proper operation and signal integrity.

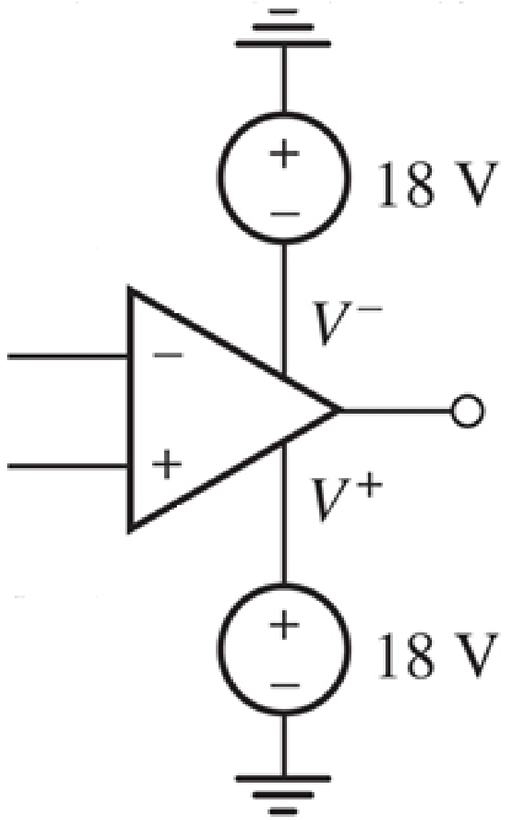

Output Saturation

- ✓ If the input signal is such that the amplified output exceeds V^+ or falls below V^-, the output will saturate.
- ✓ In this state, the output voltage remains clamped at V^+ or V^-, depending on the direction of the input signal.

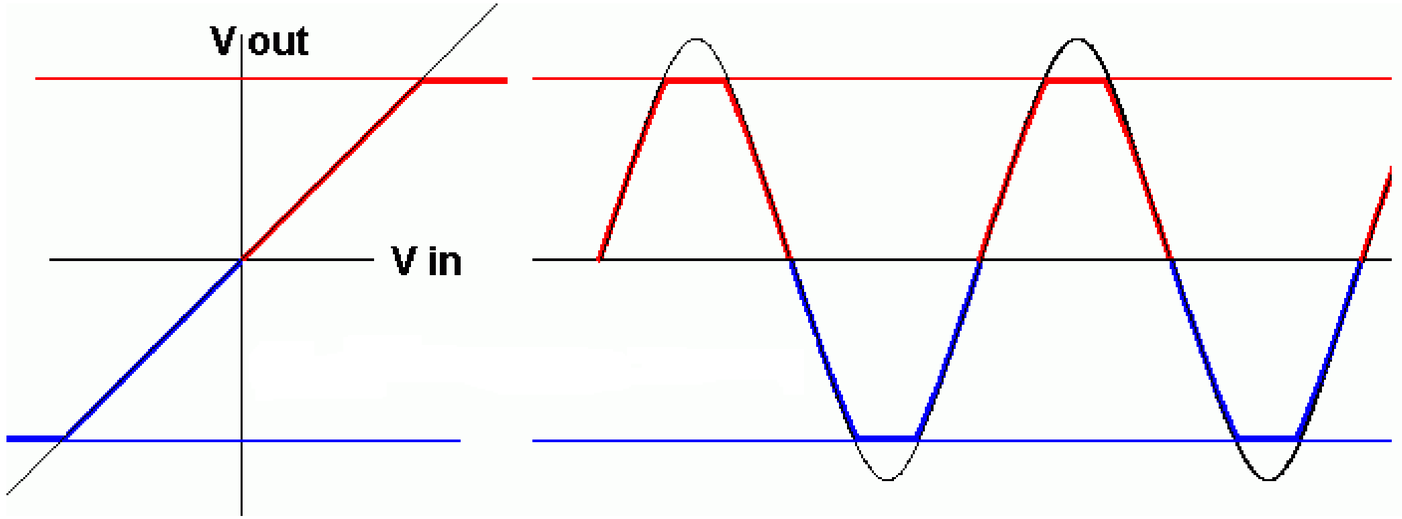

The output signal enters saturation and becomes clipped

Role of Negative Feedback

- The role of negative feedback is to transform a large and undefined gain into a fixed, controlled gain.
- Why Don't We Apply Feedback to the Positive Terminal?

$$v_+ \uparrow \;\rightarrow\; v_d \uparrow \;\xrightarrow{v_{out} = Av_d}\; v_{out} \uparrow \;\rightarrow\; v_- \uparrow \;\rightarrow\; v_d \downarrow \;\ldots$$

- Thus, the negative feedback stabilizes the operation by keeping v_d close to zero

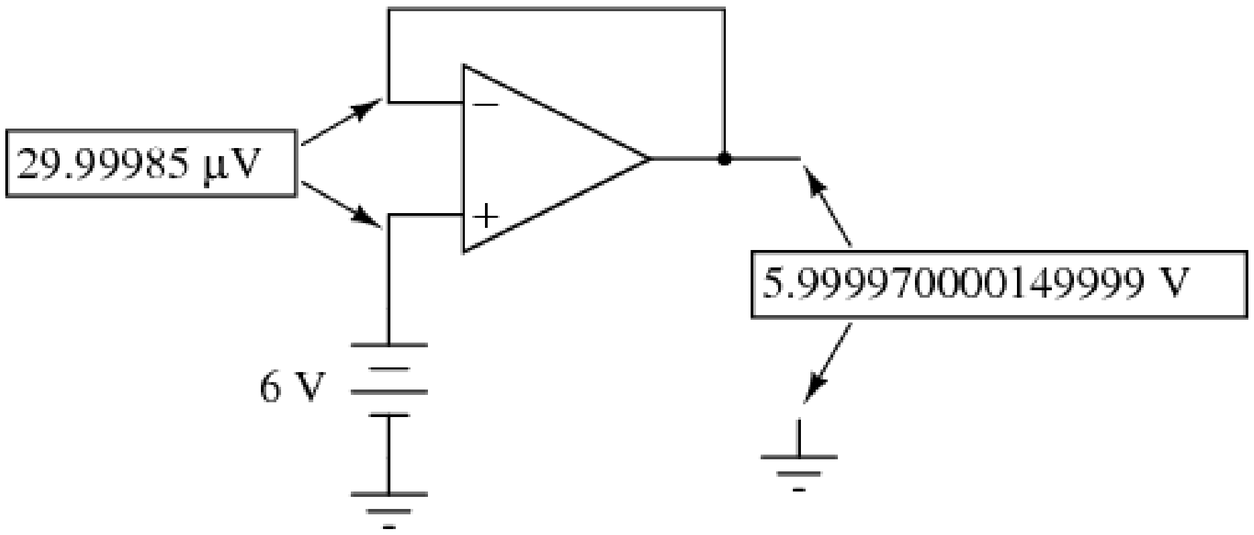

Voltage Comparator

- An operational amplifier can be used as a voltage comparator when operated in open-loop configuration (without feedback).

$$v_{out} = \begin{cases} 12 & v_{in} < 2.5 \\ -12 & v_{in} > 2.5 \end{cases}$$

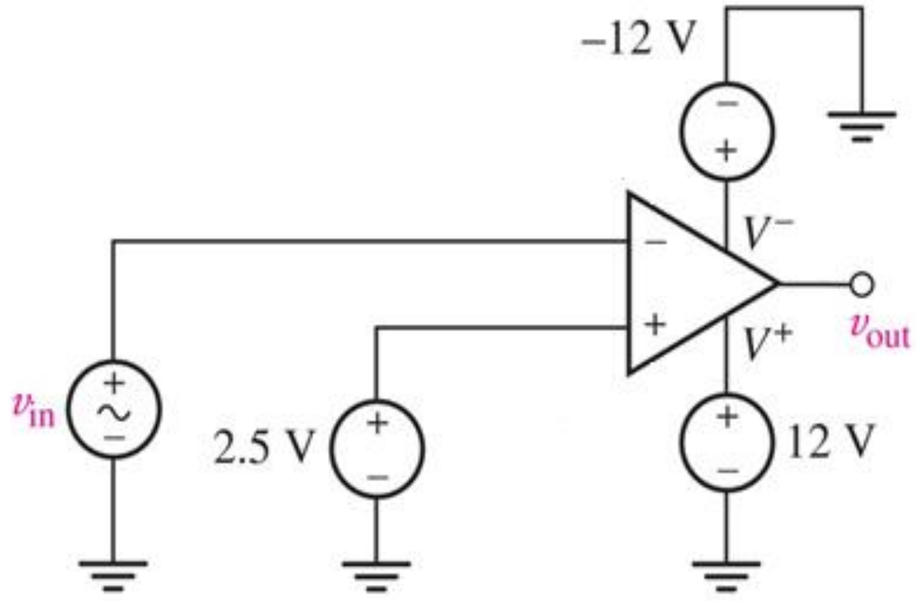

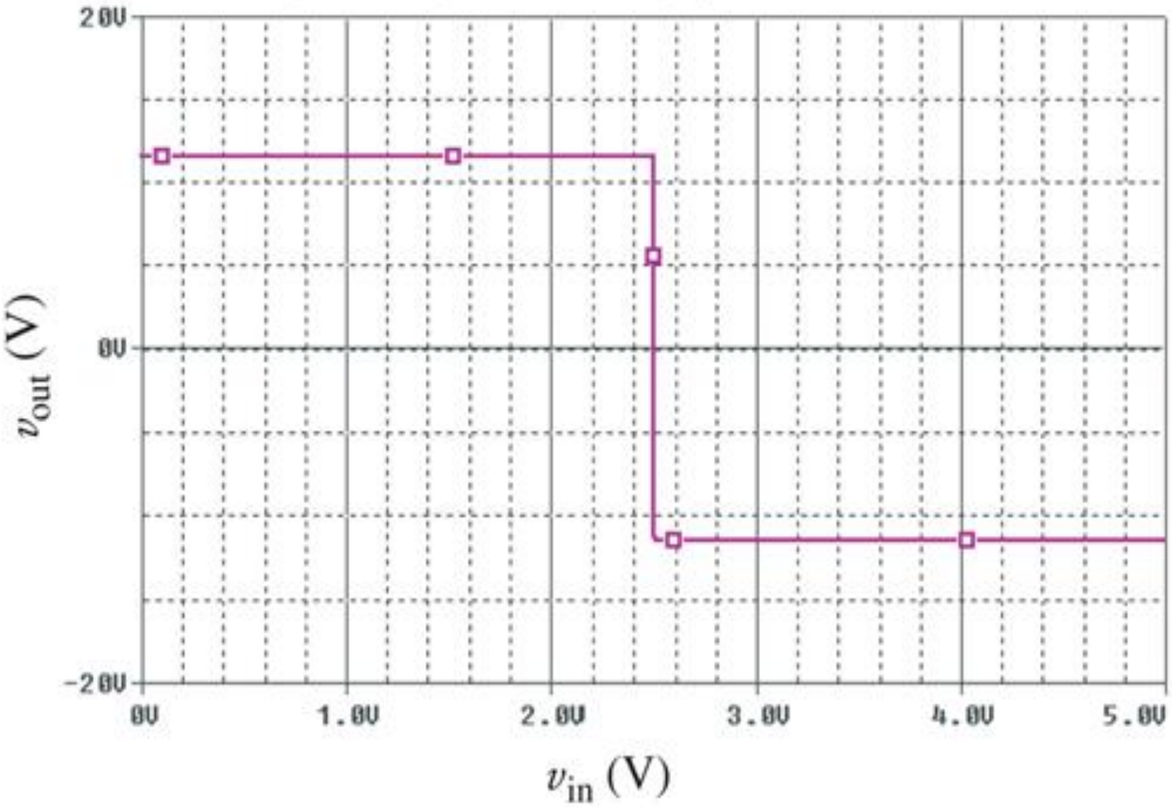

Example

Assume we have a temperature sensor that generates a voltage ranging from 0 to 5 volts for temperatures between 0 and 100 degrees Celsius. Design a circuit that provides a logical output of 1 when the temperature is below 60 degrees.

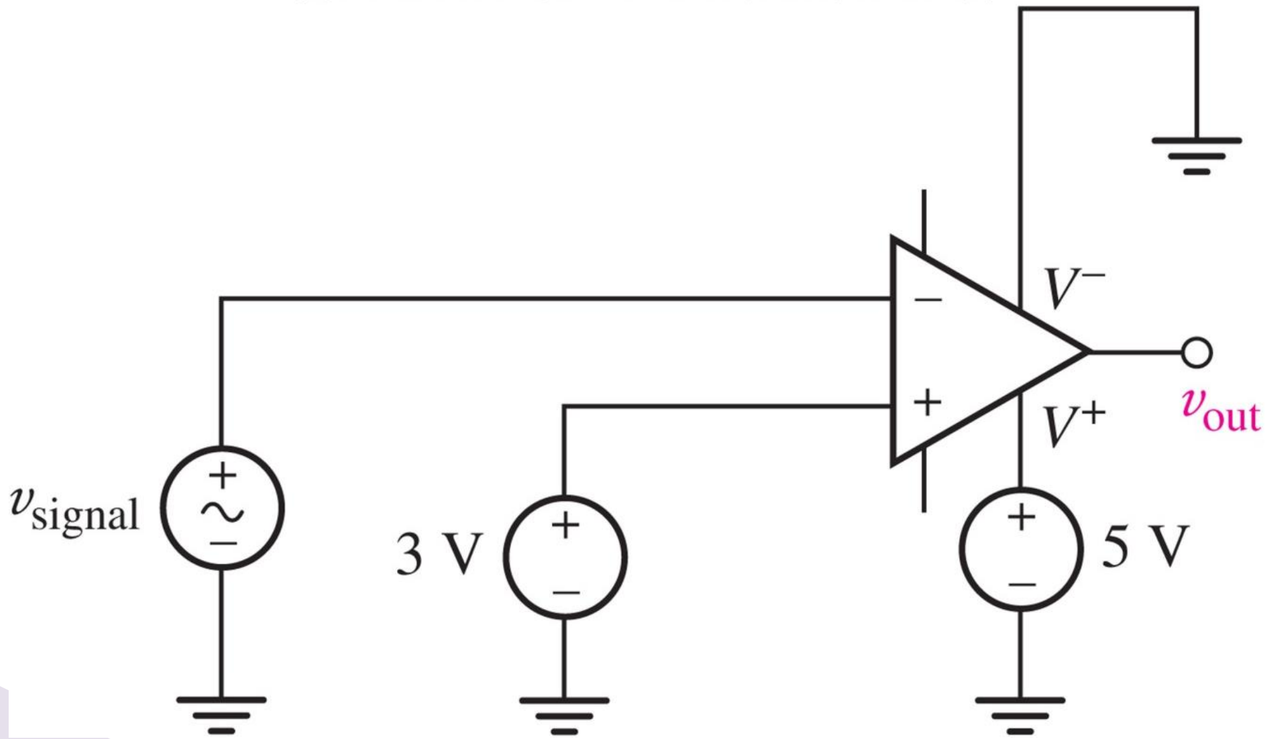

Similarity of Non-Inverting Amplifier to a Lever

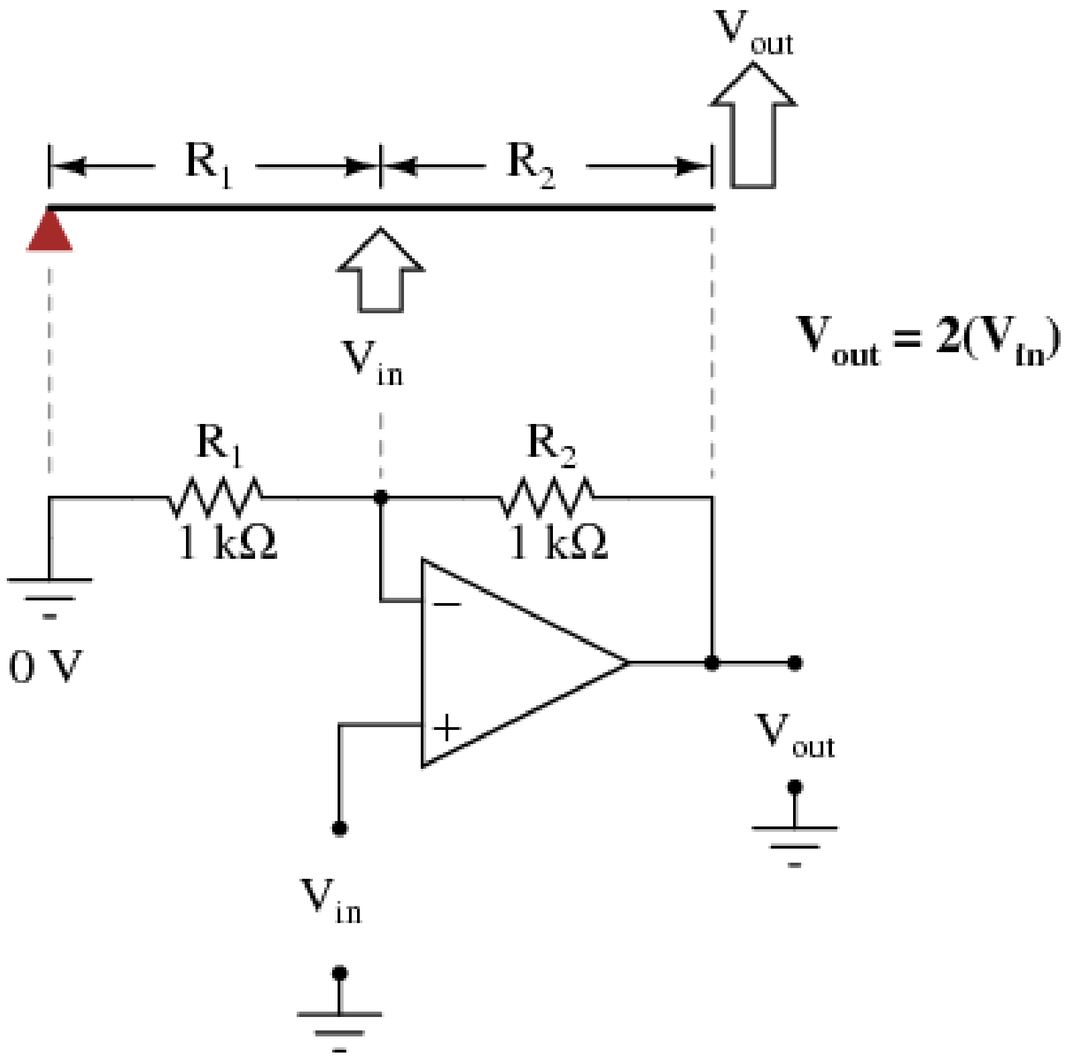

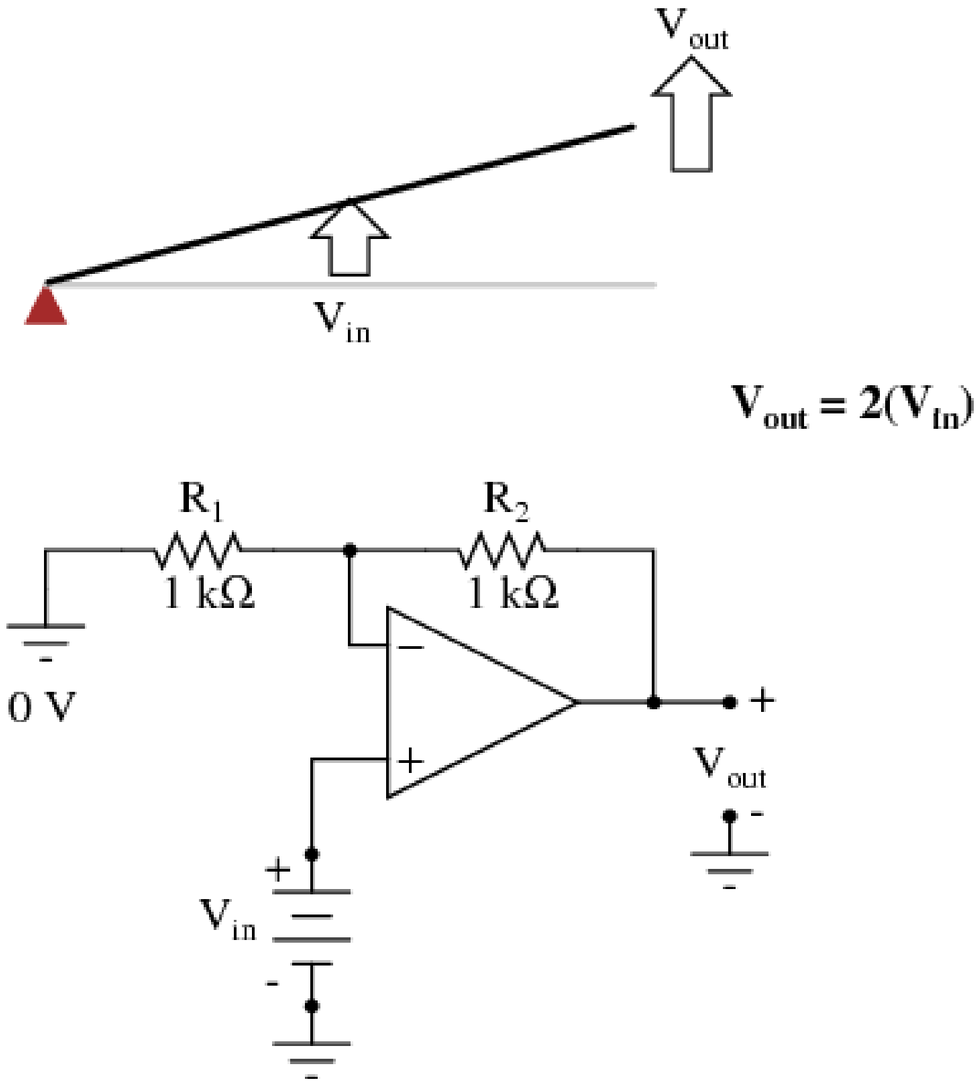

Similarity of Non-Inverting Amplifier to a Lever

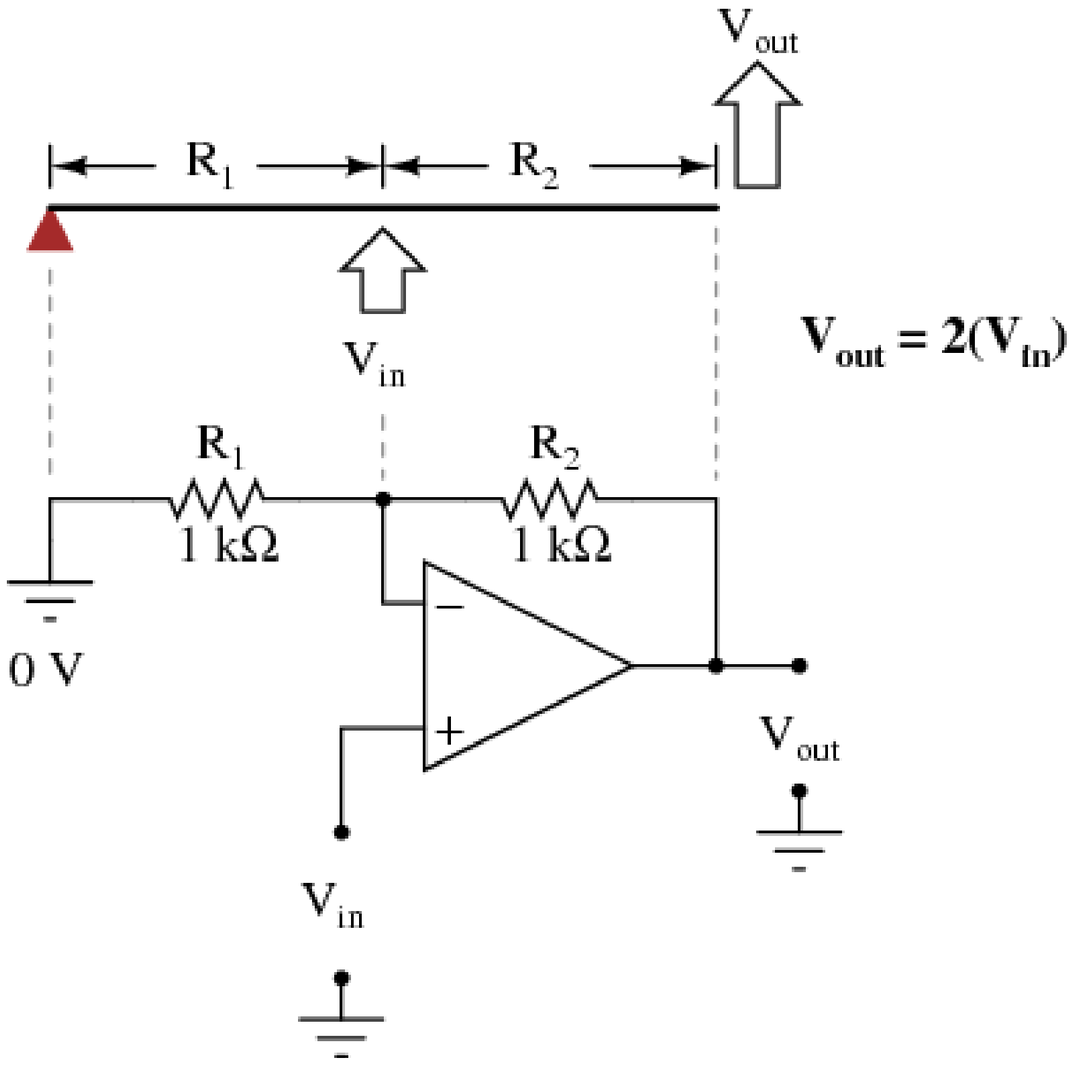

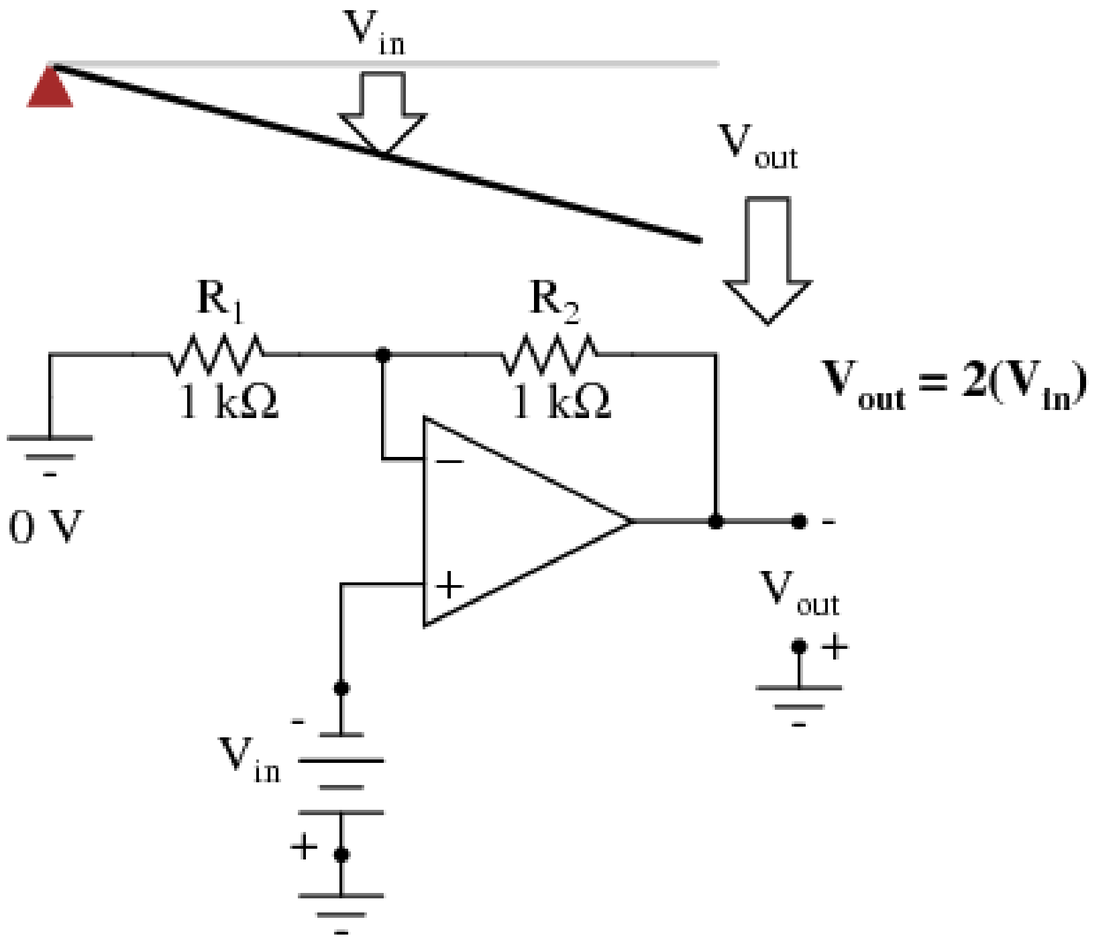

Similarity of Non-Inverting Amplifier to a Lever

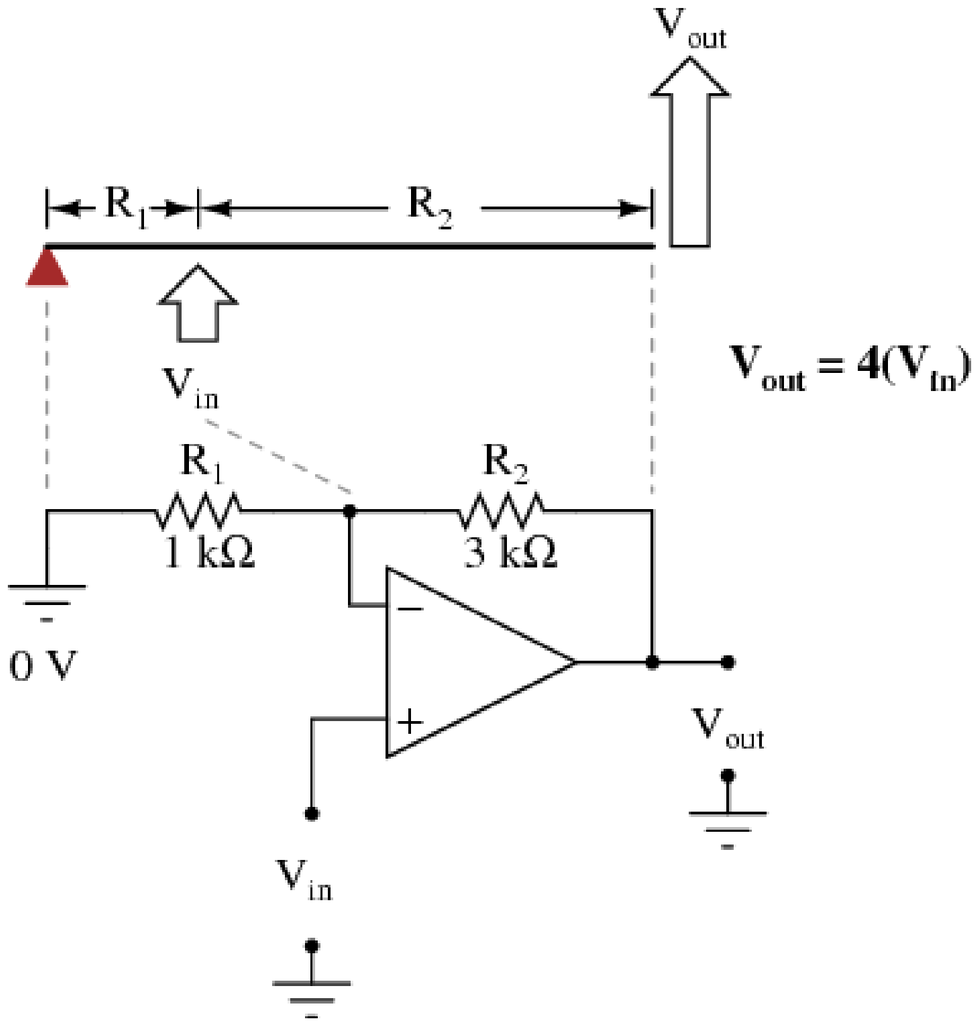

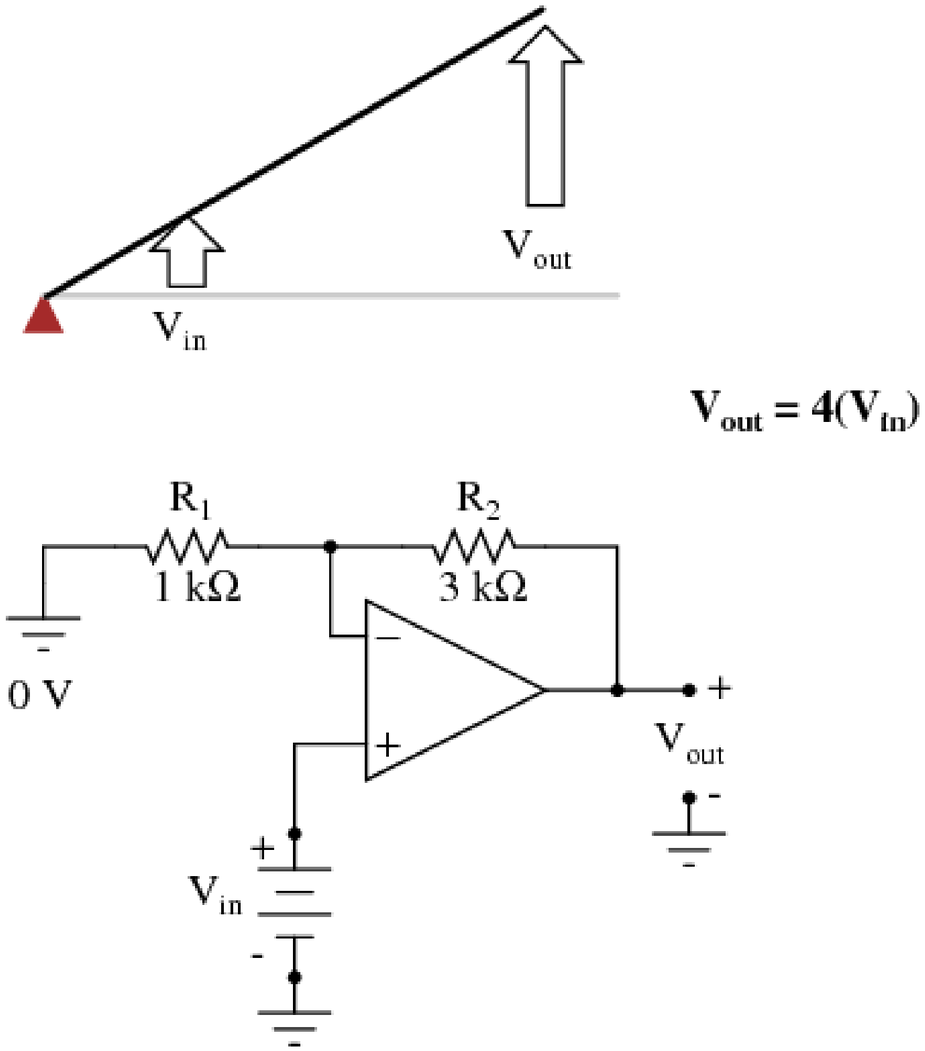

Similarity of Inverting Amplifier to a Lever

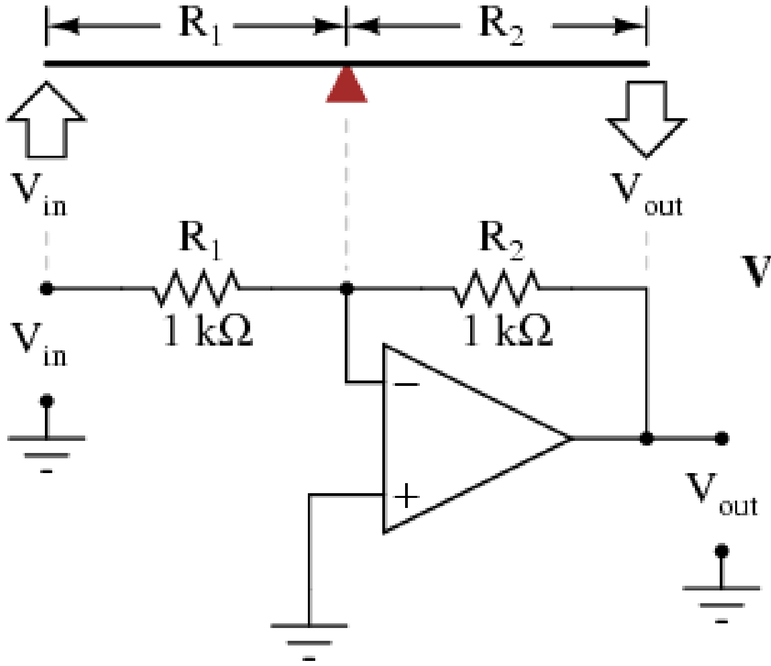

$V_{out} = -(V_{in})$

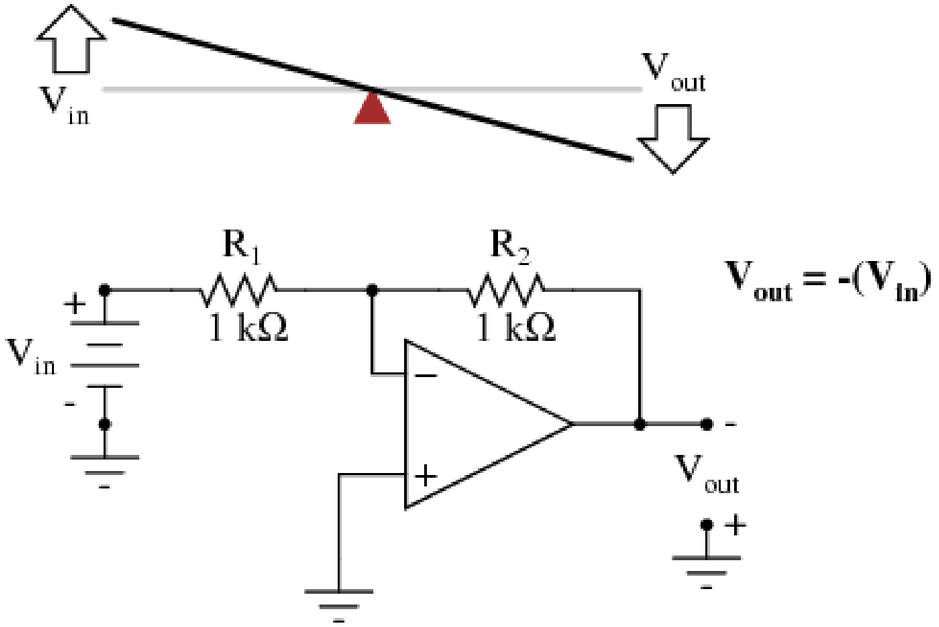

$V_{out} = -(V_{in})$

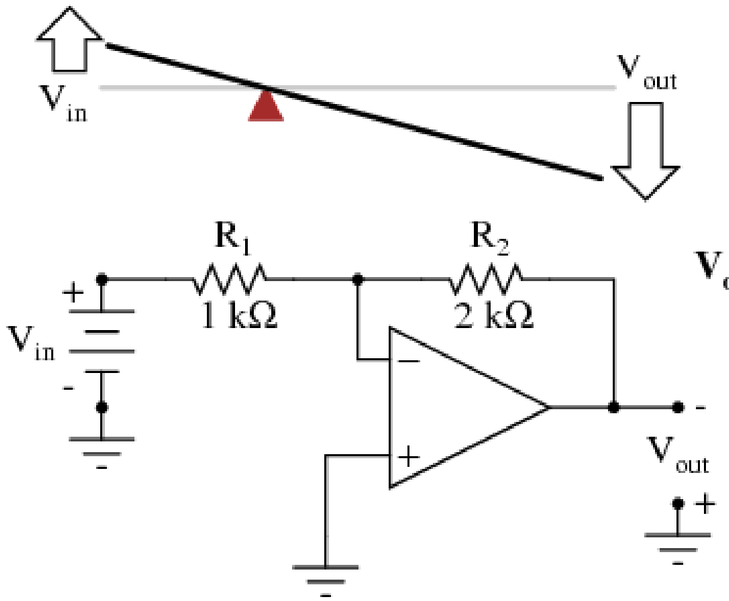

$V_{out} = -2(V_{in})$

Class Exercise 1

V_1=?

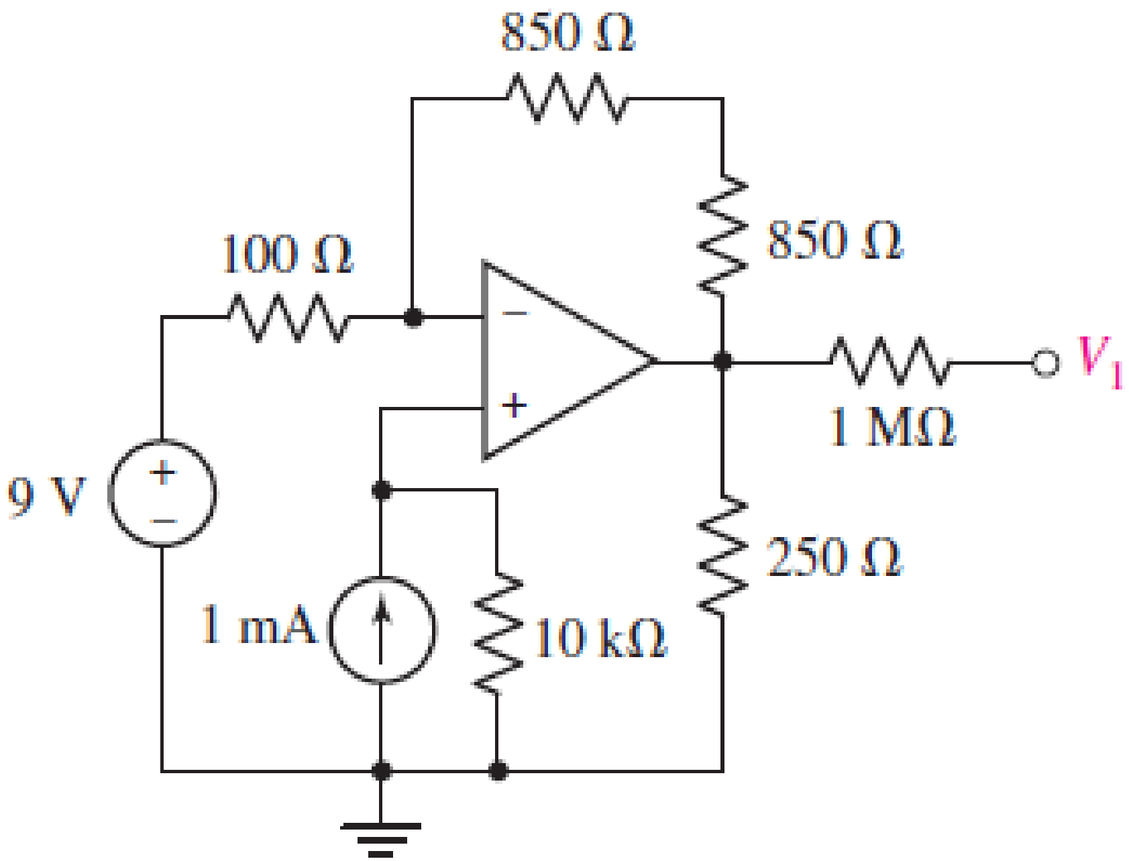

Class Exercise 2

$V_{out} = ?$

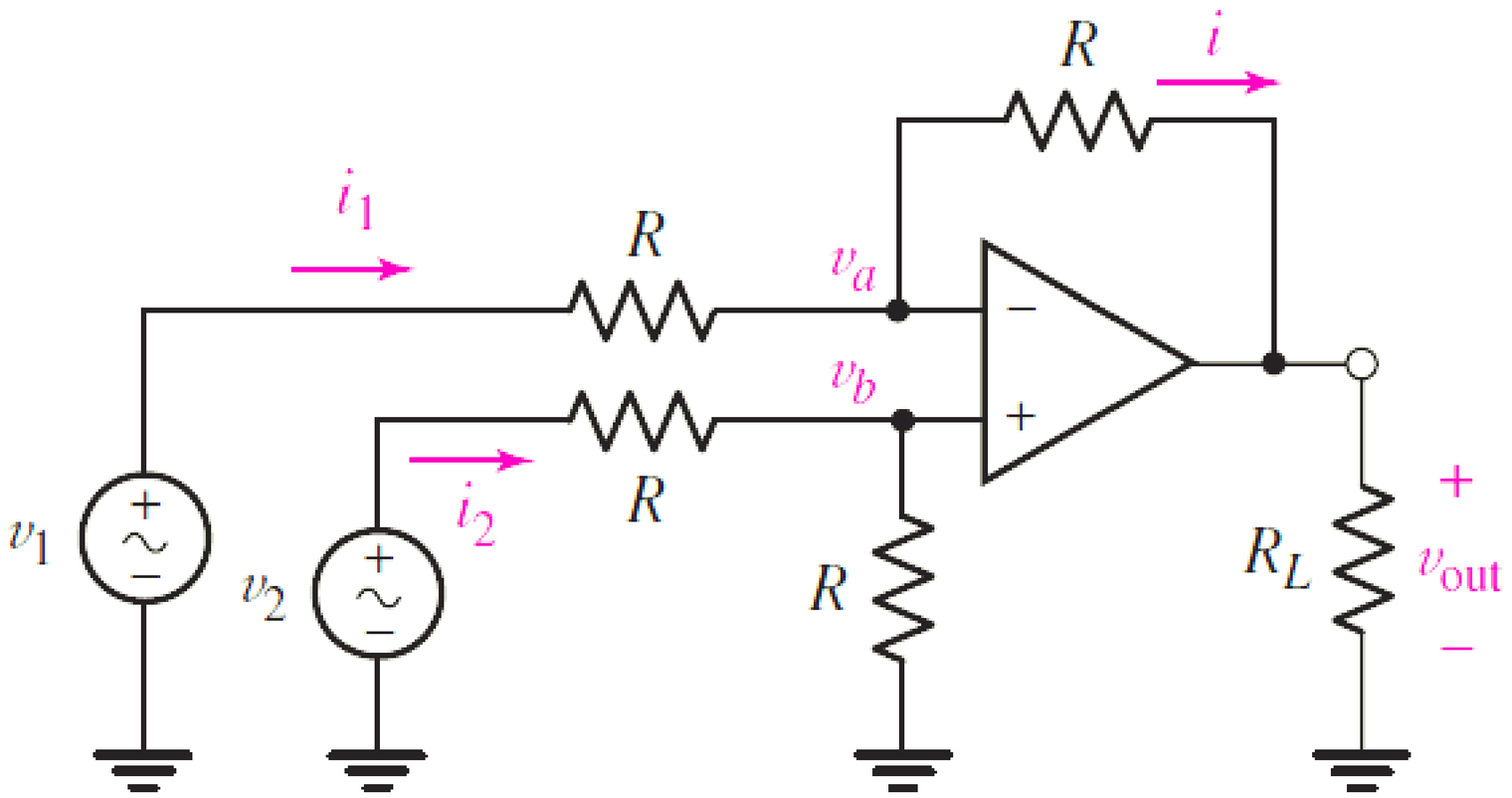

Class Exercise 3

$V_{out} = ?$

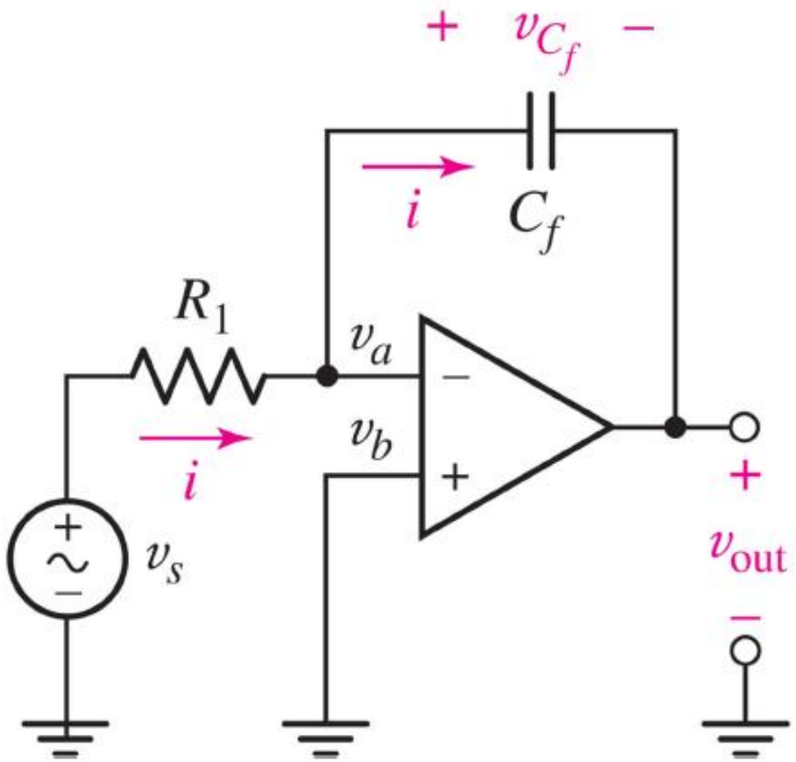

$$v_{\text{out}} = -\frac{1}{R_1 C_f}\int_0^t v_s\, dt' - v_{C_f}(0)$$

Class Exercise 4

$V_{out} = ?$

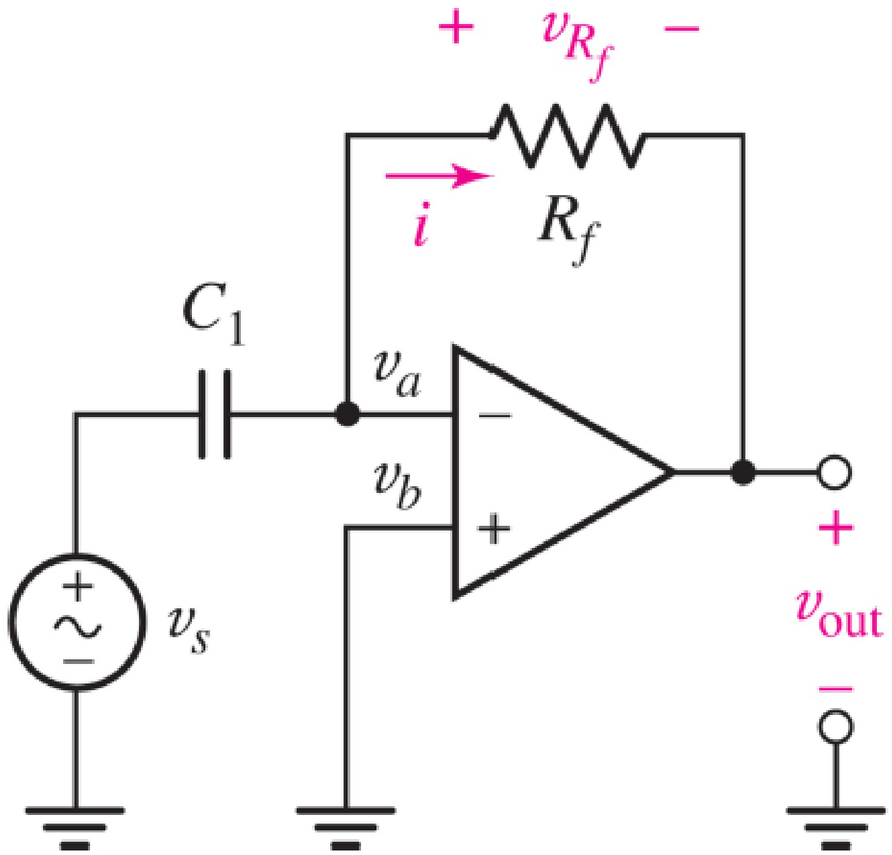

$$v_{out} = -C_1 R_f \frac{dv_s}{dt}$$

Class Exercise 5

$v_x = ?$

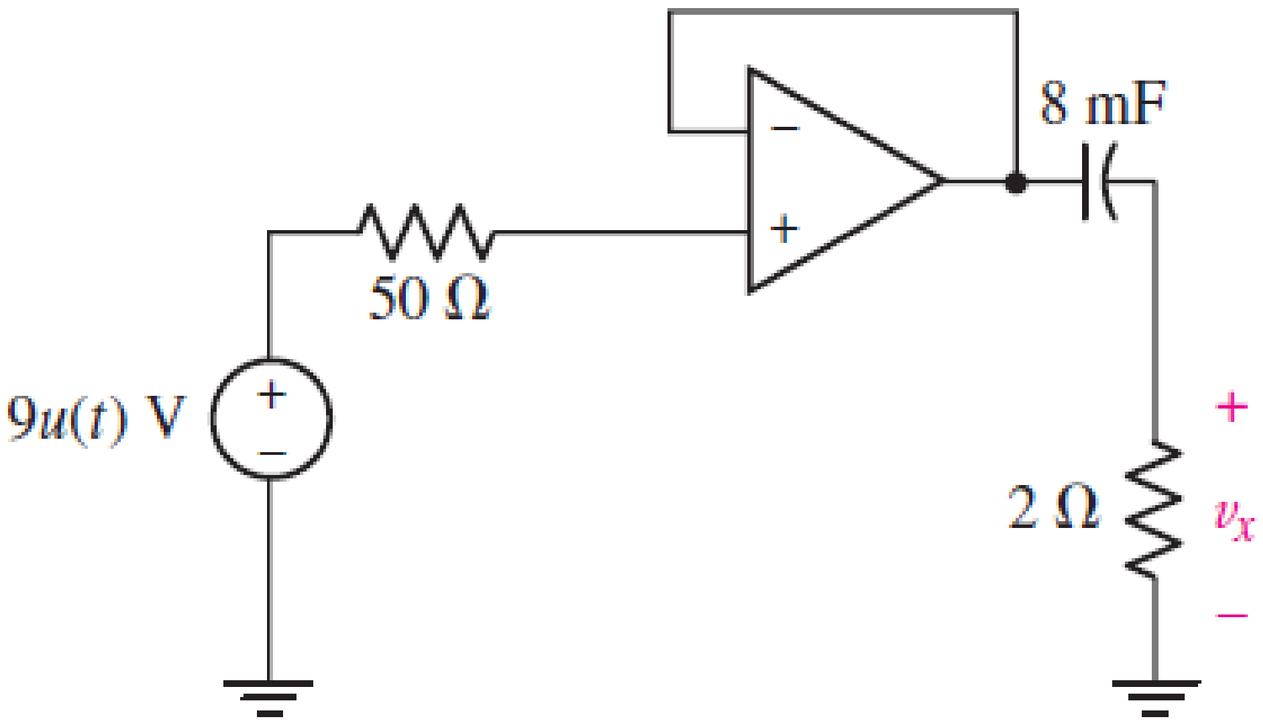

Class Exercise 6

If the initial voltage across the capacitor at time $t = 0$ is 10 volts, determine the output voltage v_o.

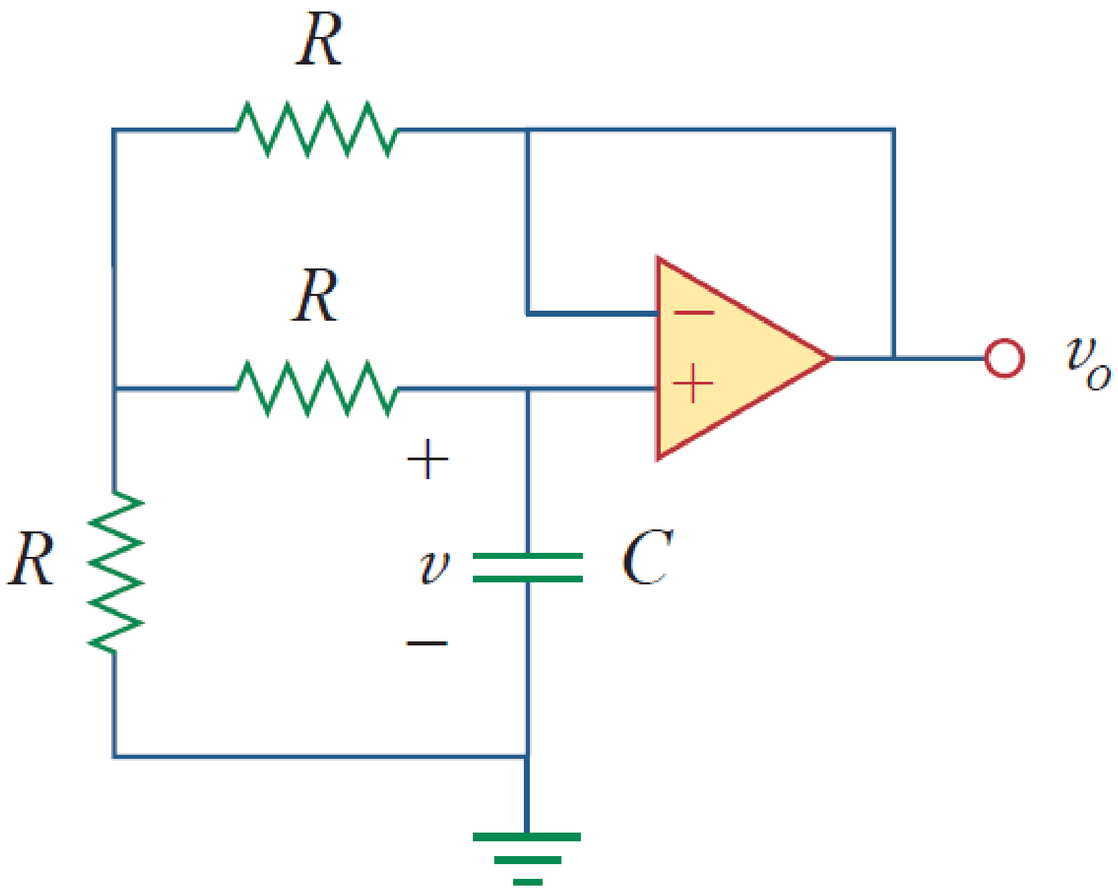

Class Exercise 7

- $v_s = 10u(t)mV, \;\; R_1 = R_2 = 10K\Omega, \; C_1 = 20\mu F, \;\; C_2 = 100\mu F$
- $v_o = ?$

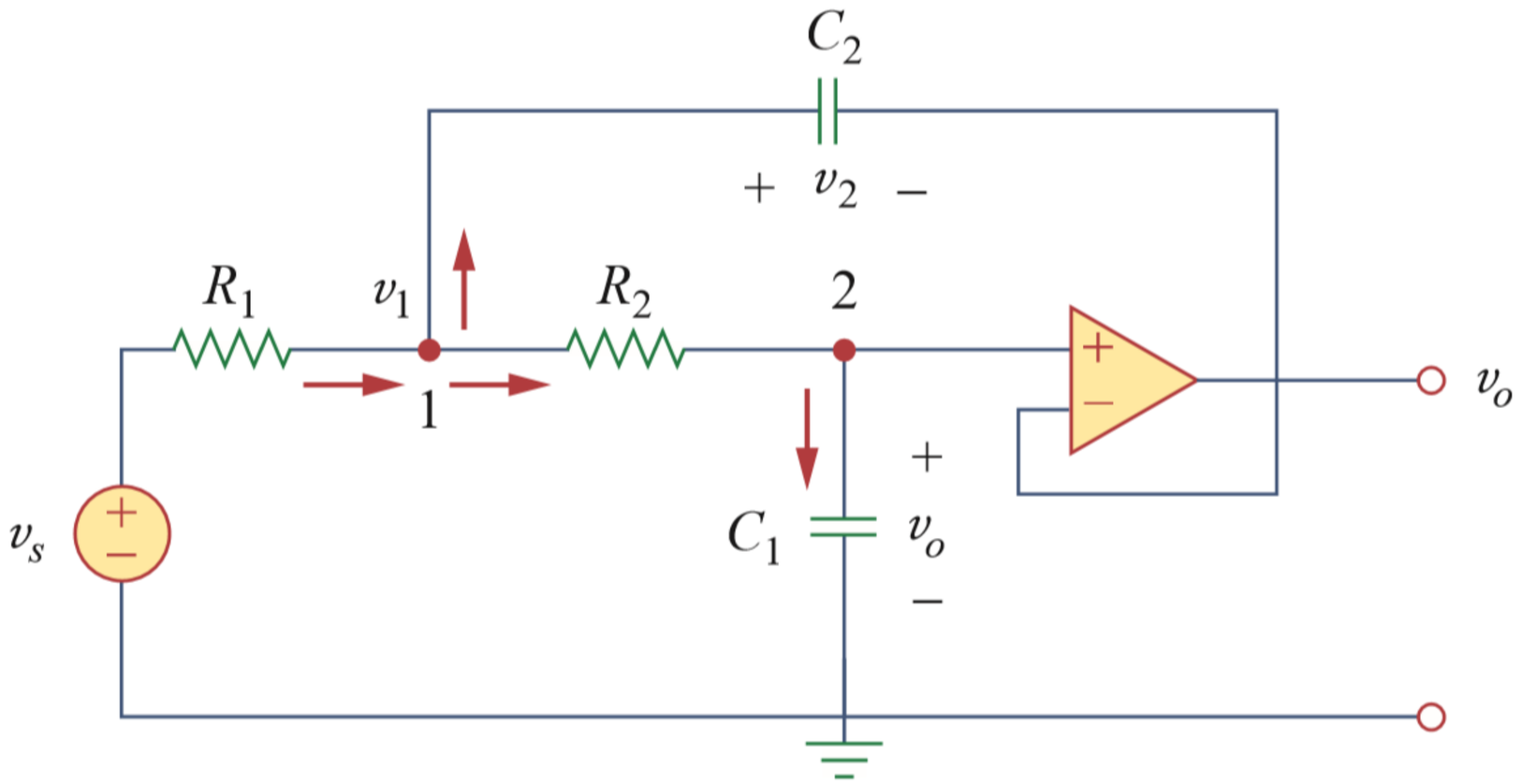

Class Exercise 8

- $v_s = \cos(t)mV,\ R_1 = R_2 = 10K\Omega,\ C_1 = 20\mu F,\ C_2 = 100\mu F$
- $v_o = ?$ (Use phasors).

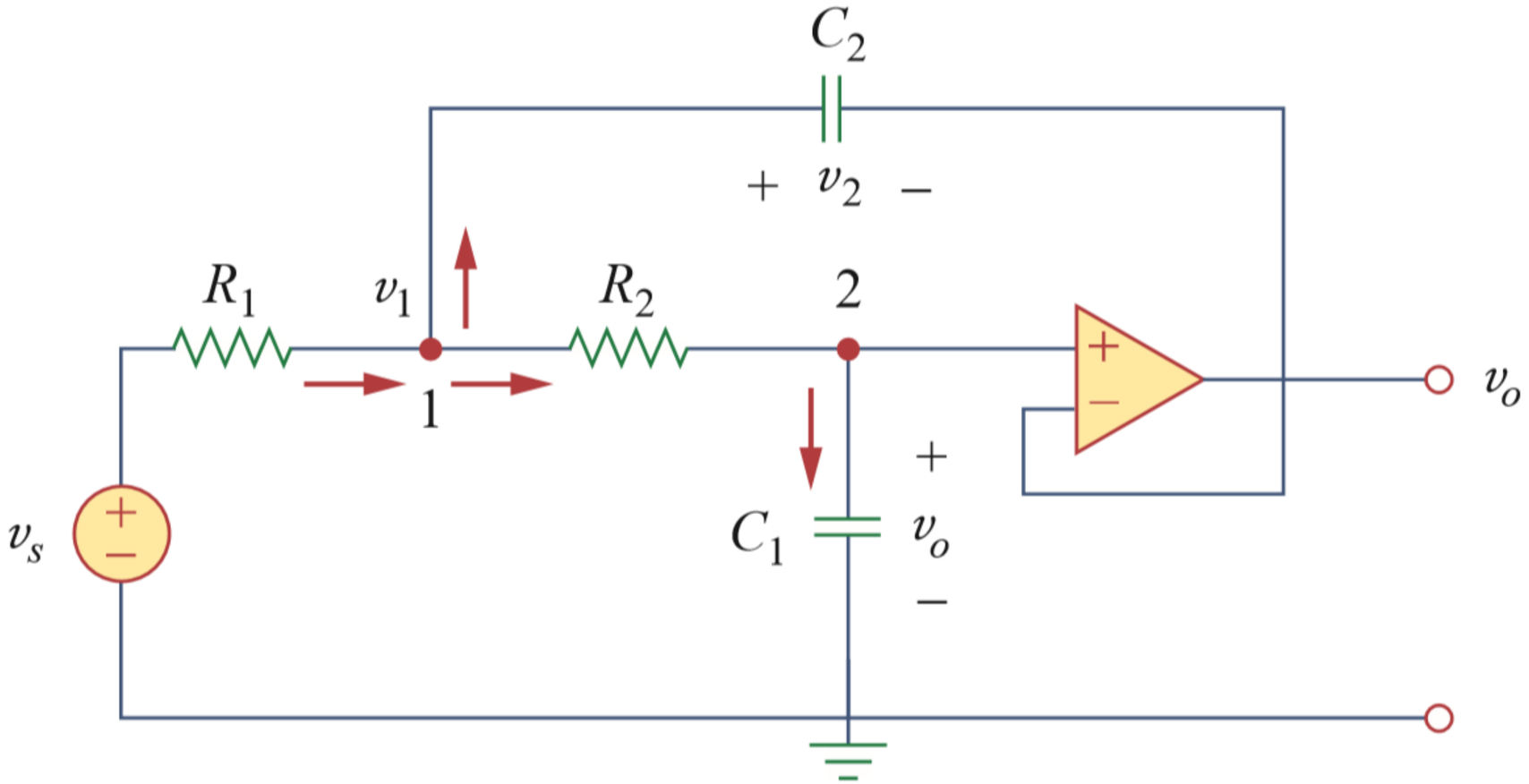

Class Exercise 9

If $v_{in} = \sin(200\pi t)$, plot the output voltage v_{out}.

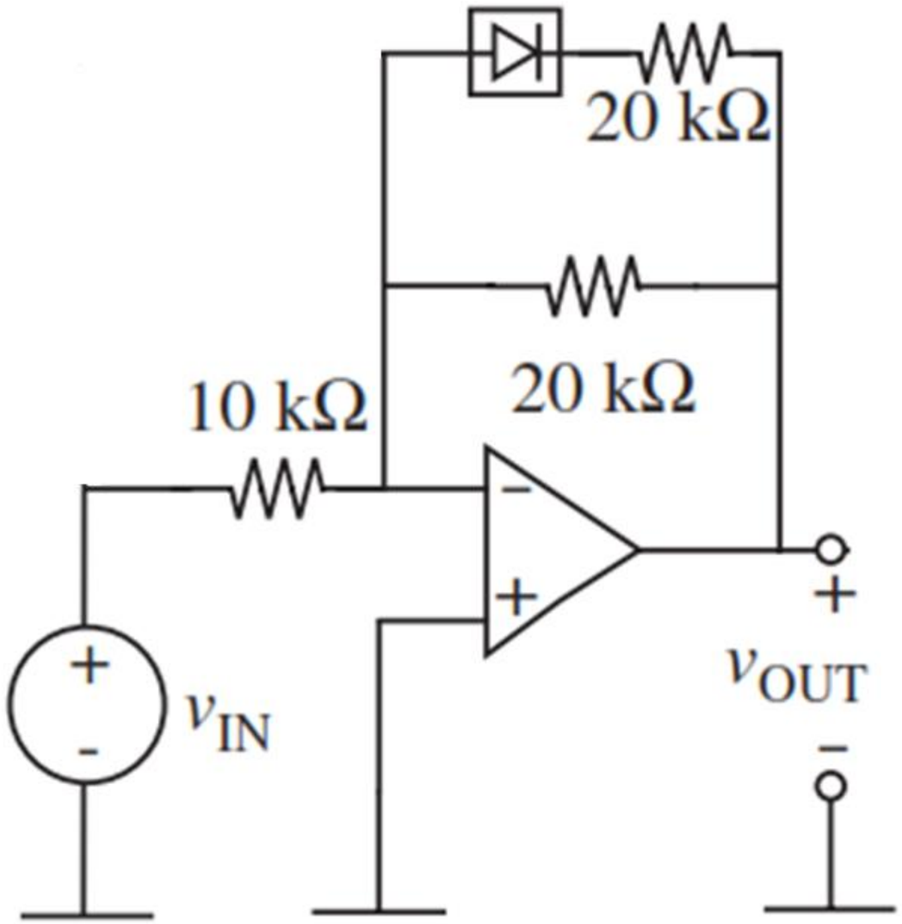

Class Exercise 10

- Plot the diagram of v_{out} as a function of v_{in}.

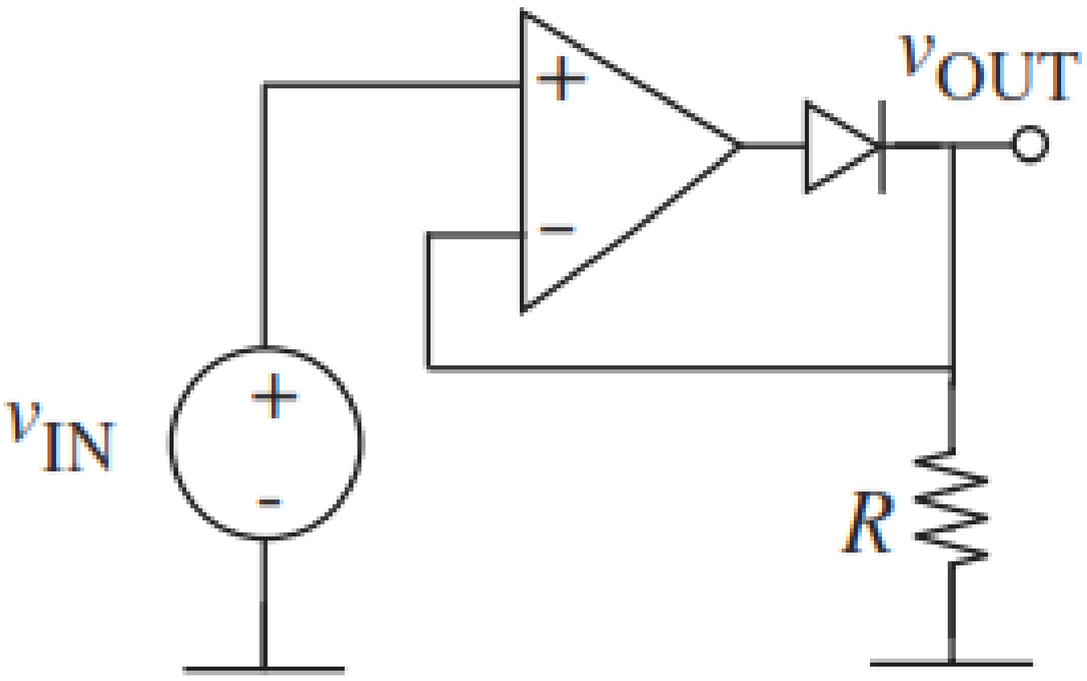

Class Exercise 11

- Plot the diagram of v_{out} as a function of v_{in}.

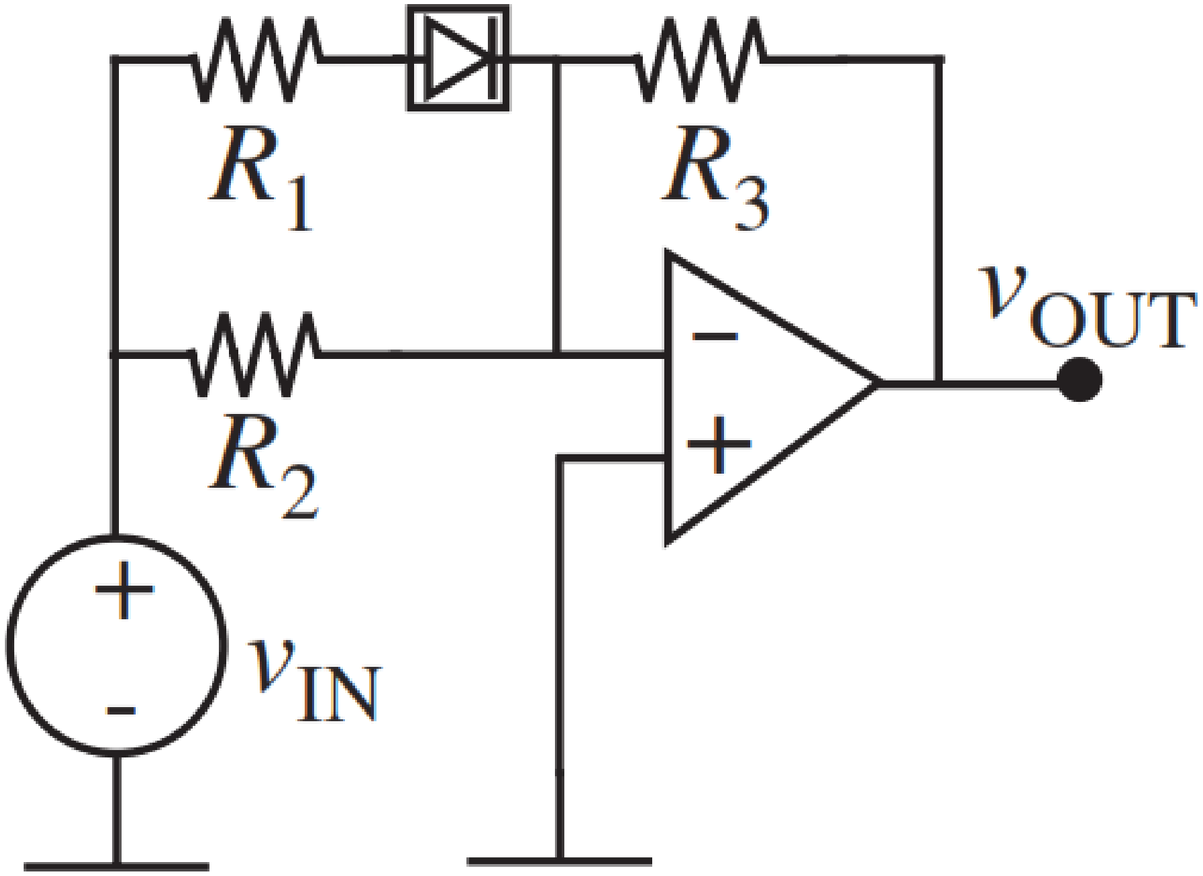

Class Exercise

This is an active filter (using an op-amp in a frequency filter). Calculate:

- ✓ The type of filter
- ✓ The filter gain
- ✓ The cut-off frequency

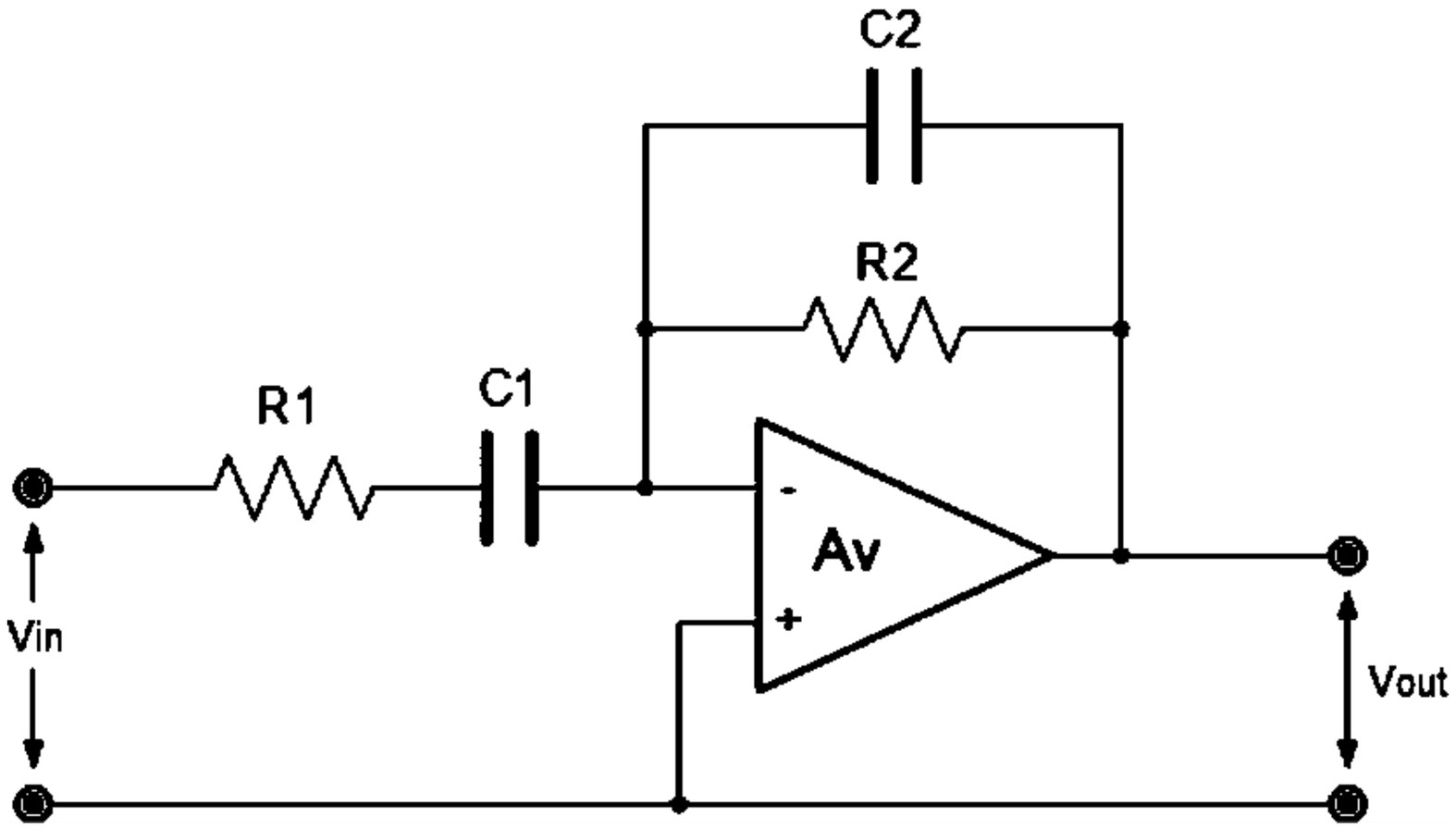

Thanks

دانشگاه صنعتی امیرکبیر
(پلی تکنیک تهران)

Electrical and Electronic Circuits

chapter 13. Operational Amplifier

Afarghadan@aut.ac.ir

عظیم فرقدان

مهر ۱۴۰۳

Objectives of the Lecture

- Introduction to Operational Amplifiers
  - Precise Model of Operational Amplifiers
  - Ideal Model
  - Applications of Operational Amplifiers
    - Inverting Amplifier
    - Non-Inverting Amplifier
    - Voltage Follower (Buffer)
    - Multi-Stage Amplifier
    - Ideal Voltage and Current Sources
- Comparator Circuit
- Several Examples

Operational Amplifier (Op-Amp)

- The **Operational Amplifier (Op-Amp)** is an integrated circuit (IC) widely utilized as an amplifier in various applications.
- Its origins date back to the 1940s when it was employed in analog computational circuits for constructing adders, sub tractors, and analog multipliers.

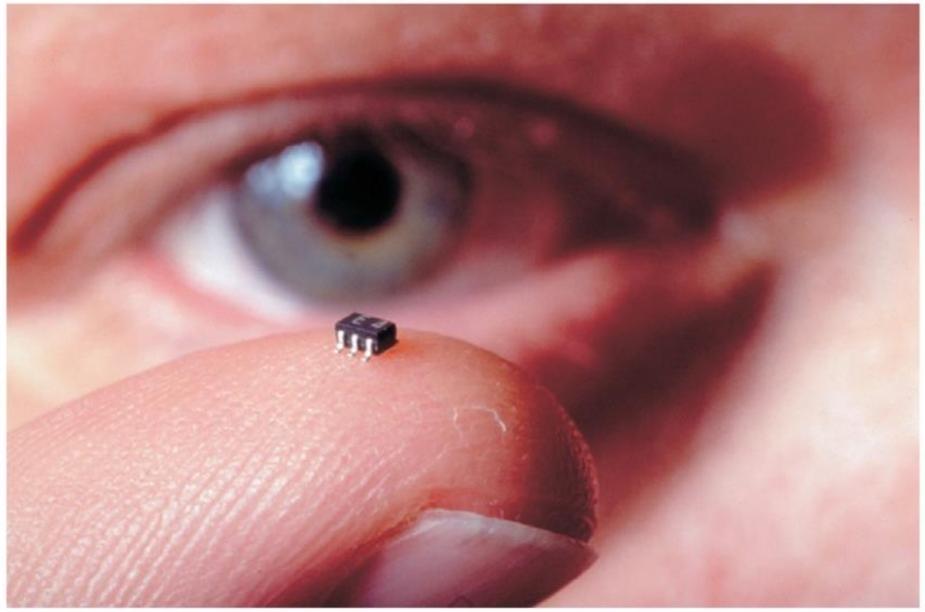

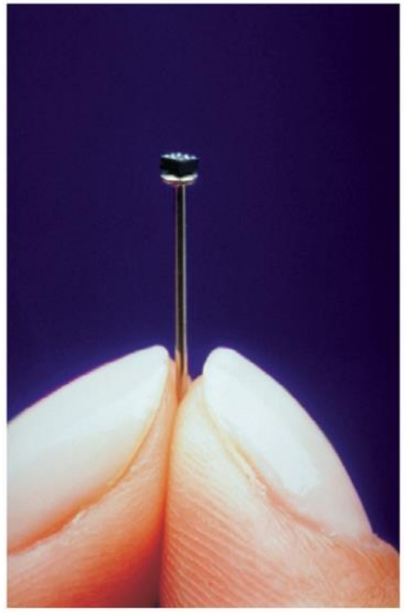

The Internal Circuit of a Typical Operational Amplifier

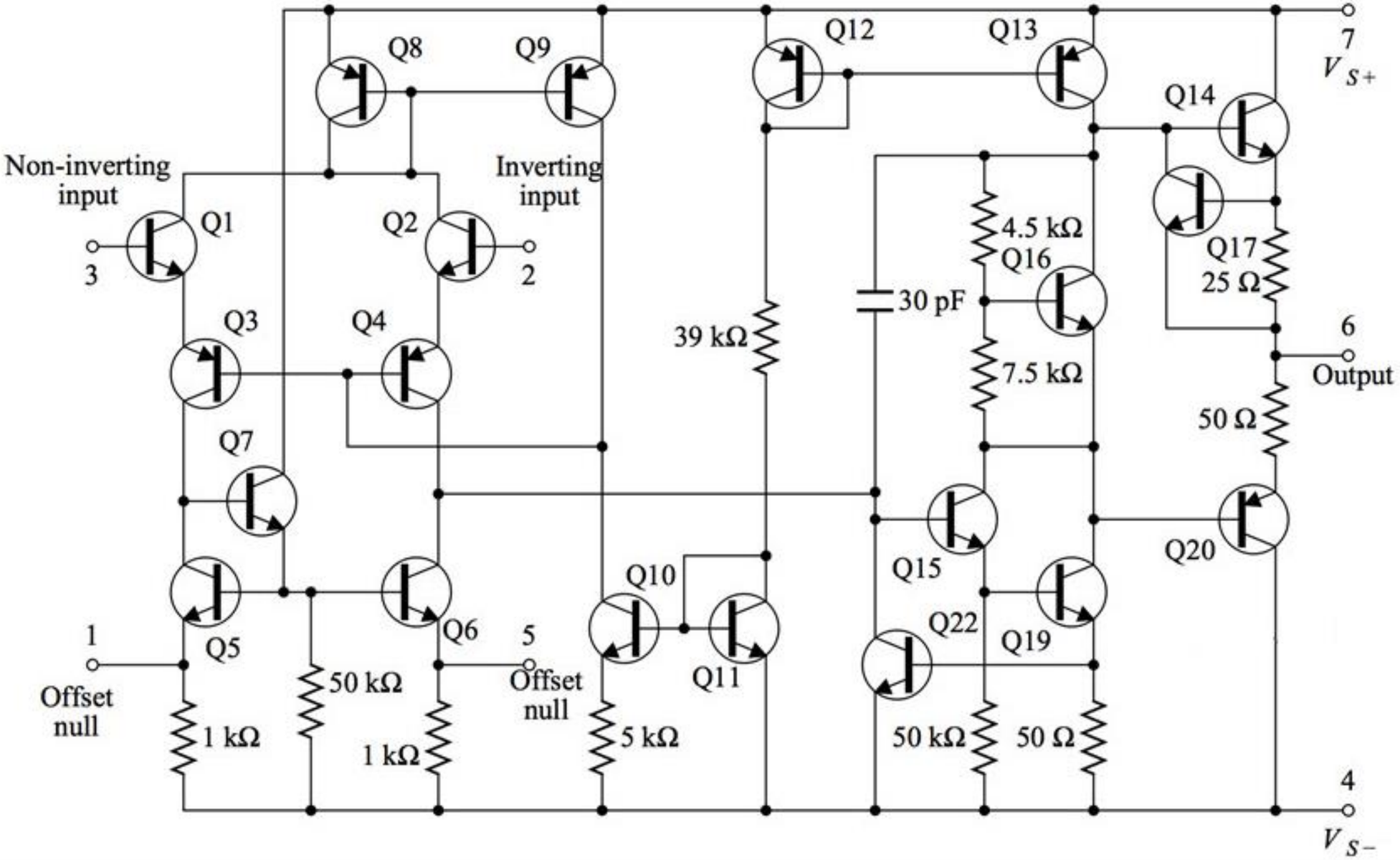

Nonlinear Behavior of the Diode

- An operational amplifier (Op-Amp) is generally represented by the following symbol and includes the following pins:

- **Input Pins**: $Input$
- **Output Pin**: $Output$
- **Power Supply Pins**: V^+, V^-
- **Offset Adjustment Pins**: $Offset$

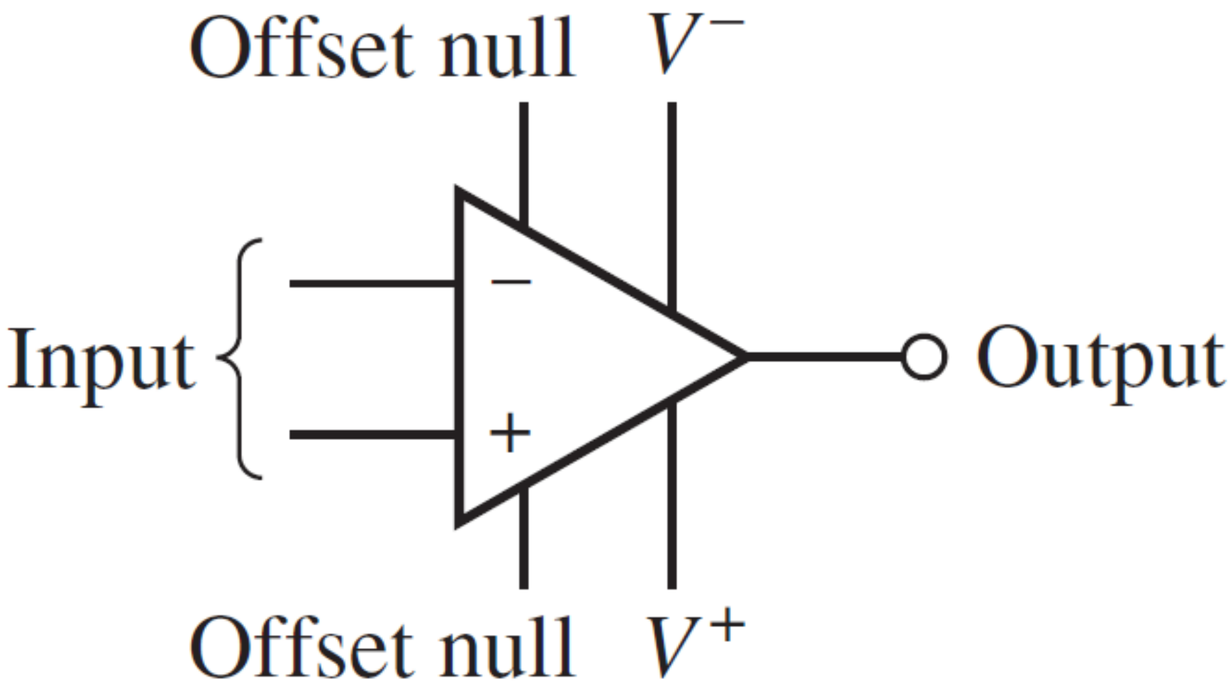

Op-Amp Symbol

- ✓ Let us focus on the **input** and **output pins**, assuming the other pins are connected to appropriate voltage levels.
- ✓ An operational amplifier functions as a **differential amplifier**, meaning it amplifies the difference between its input signals.

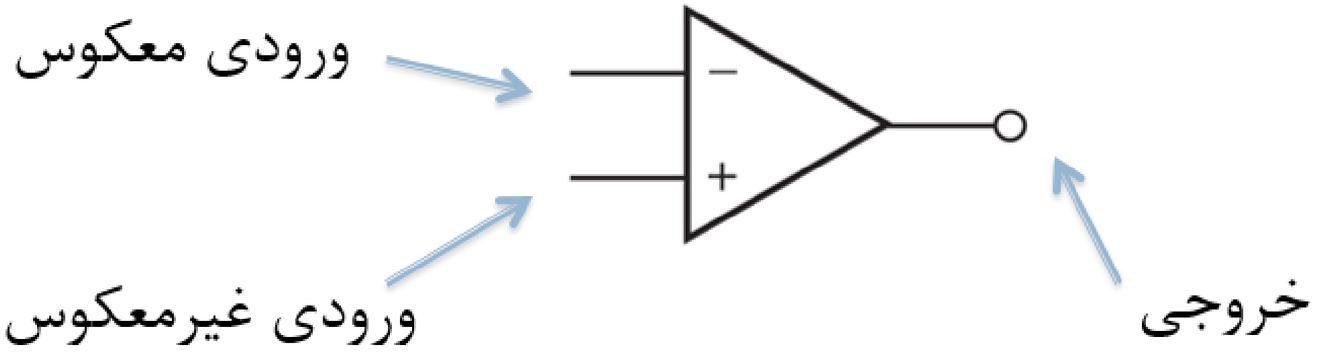

Precise Model of an Op-Amp

- A circuit that operates as a voltage amplifier can be modelled using the following equivalent circuit.
- This model includes:
  - **Input Resistance (R_i)**
  - **Output Resistance (R_o)**
  - **Open-Loop Gain (A)**

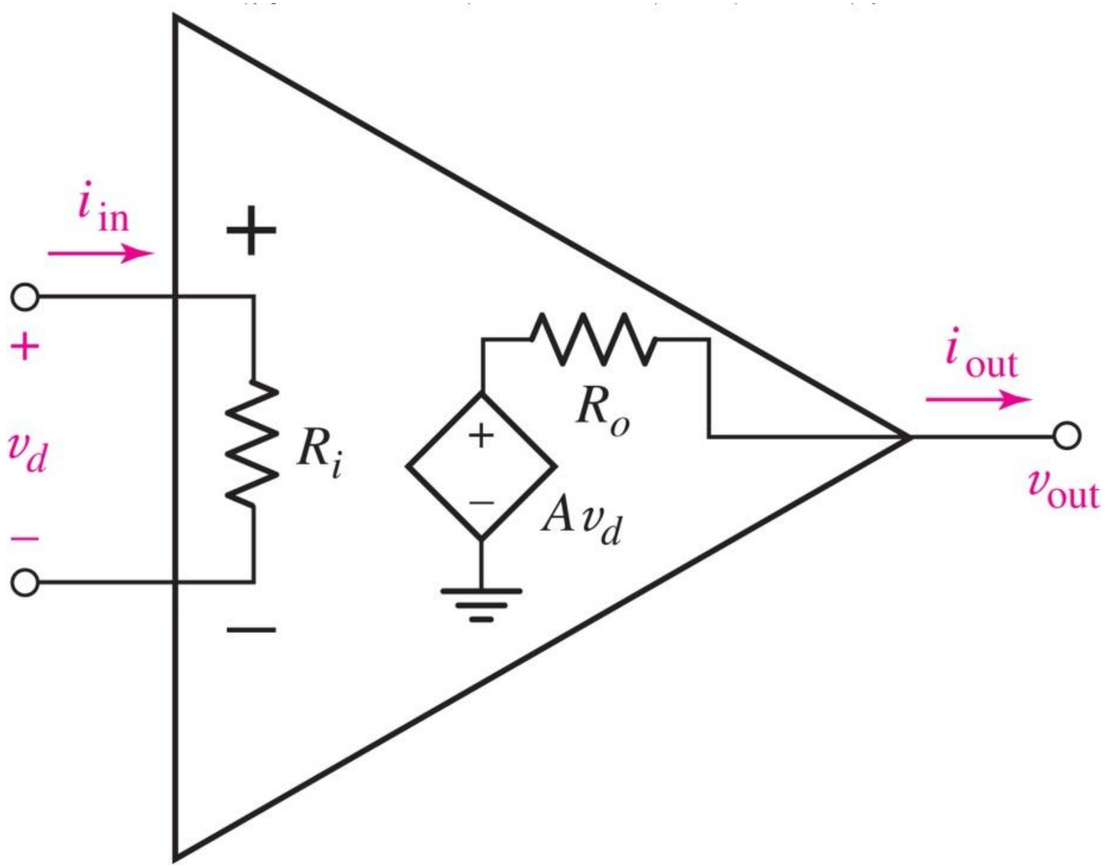

Example: Using the Precise Model to Analyse an Inverting Amplifier

✓ In the circuit below, what is the gain of the amplifier?

- KCL_1: $\frac{-v_d - v_{in}}{R_1} + \frac{-v_d - v_{out}}{R_f} + \frac{-v_d}{R_i} = 0$

- KCL_2: $\frac{v_{out} + v_d}{R_f} + \frac{v_{out} - Av_d}{R_o} = 0$

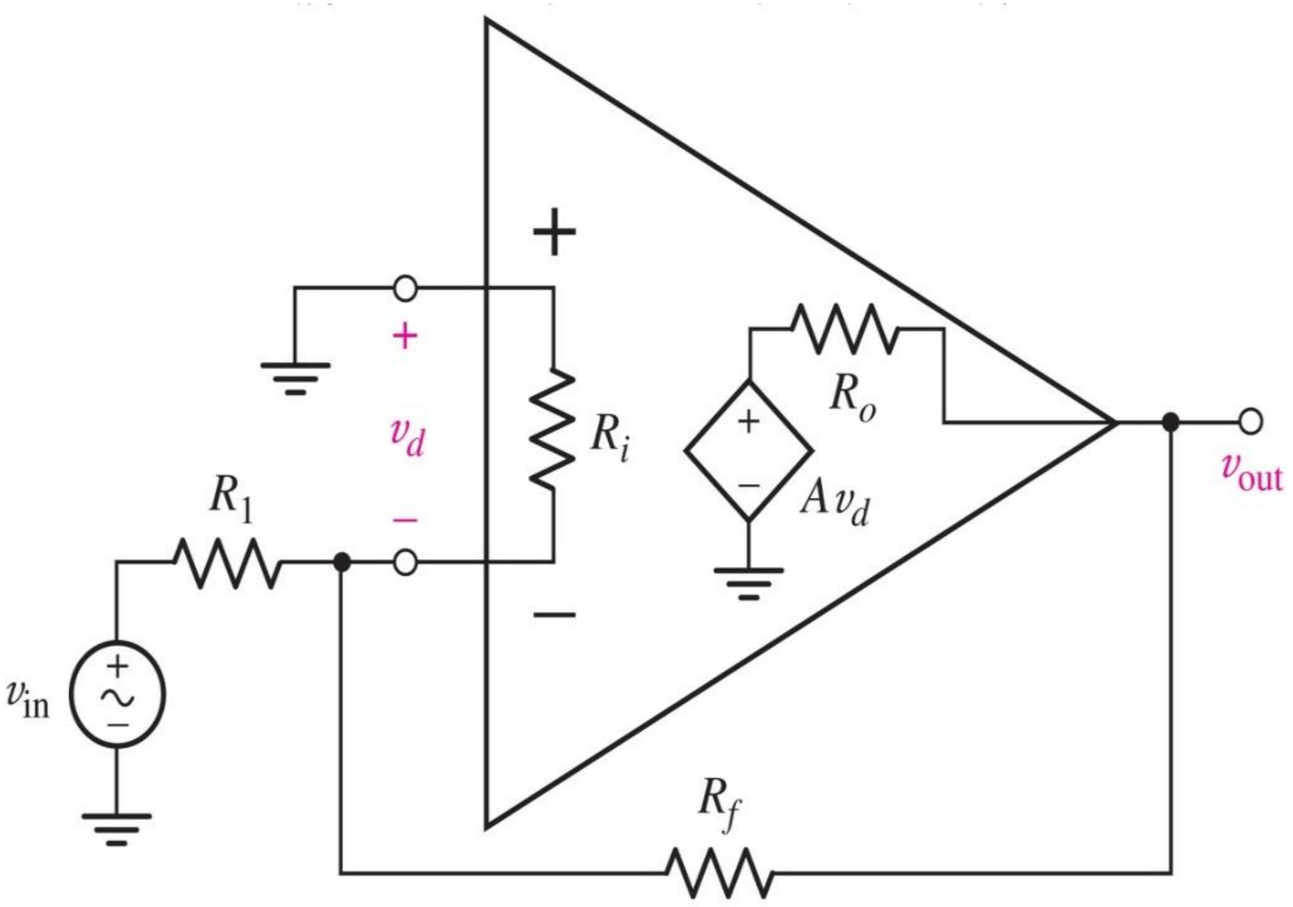

Example: Using the Precise Model to Analyse an Inverting Amplifier

✓ By solving the system of equations and eliminating v_d, we obtain:

➢ $A_v = \frac{v_{out}}{v_{in}} = \left[\frac{R_o+R_f}{R_o-AR_f}\left(1+\frac{R_1}{R_f}+\frac{R_1}{R_i}\right)-\frac{R_1}{R_f}\right]^{-1}$

➢Example Solution for the Inverting Amplifier Using LM741 Specifications

➢ $A = 200000$

➢ $R_i = 2M\Omega$

➢ $R_o = 75\Omega$

➢ If $R_f = 47$ and $R_1 = 4.7$

➢ Then: $A_v = -9.999$

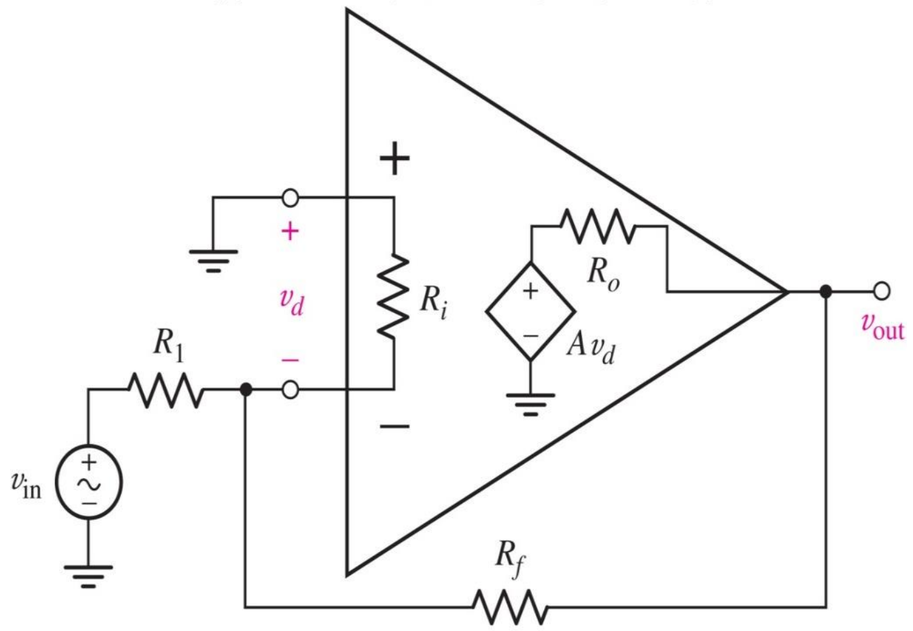

Advantages of Using an Op-Amp as a Voltage Amplifier

- ✓ **High Input Resistance**:(in the range of mega-ohms to tera-ohms)
  - ➢ To ensure that the maximum voltage of the source is applied across its input.
- ✓ **Low Output Resistance**:(in the range of a few ohms to a few tens of ohms)
  - ➢ to ensure that the entire output voltage of the amplifier is delivered to the load.
- ✓ **Adjustable Gain**:(achieved by applying feedback resistance):
  - ➢ As observed in the circuit shown, provided that A is sufficiently large, the gain of the amplifier can be approximated with high accuracy as $Av \approx -\frac{R_f}{R_1}$.

Ideal Model

- In the ideal case, when $A = \infty$, $R_i = \infty$, and $R_o = 0$, the behaviour of the operational amplifier can be described as follows:
- Since v_{out} has a finite value (it cannot exceed the supply voltage), $v_d = \frac{v_{out}}{A} \approx 0$.
- As a result, $i_{in} \approx 0$.

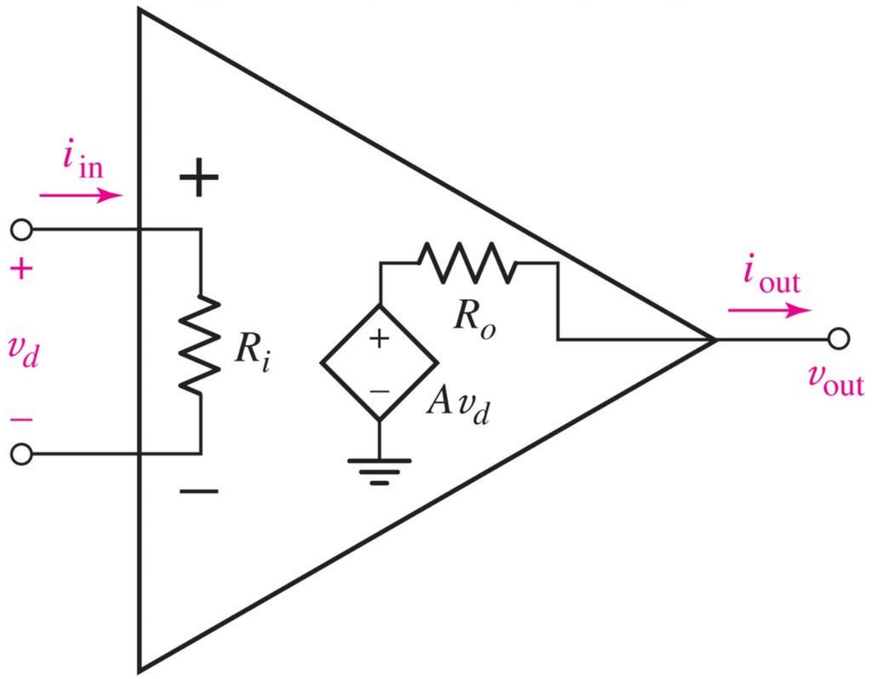

Ideal Model

Rules of the Ideal Model:

1.No current flows through the input terminals.

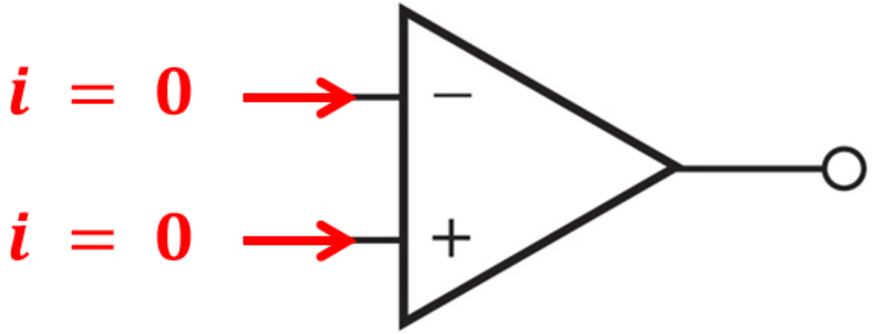

2.The voltage difference between the two input terminals is zero.

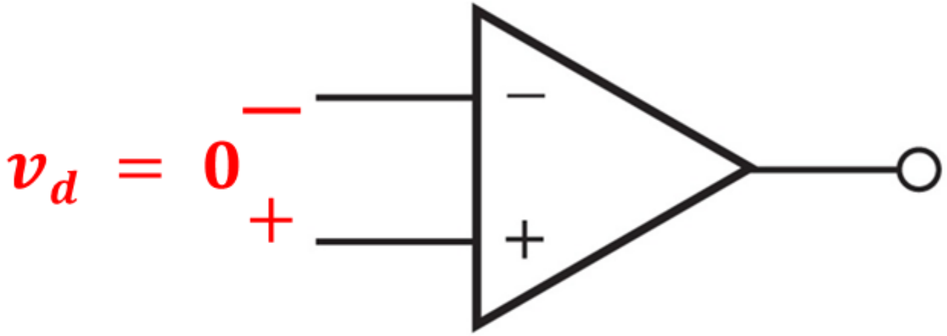

Inverting Amplifier

✓ By applying KVL and using the rules of the ideal operational amplifier, we have:

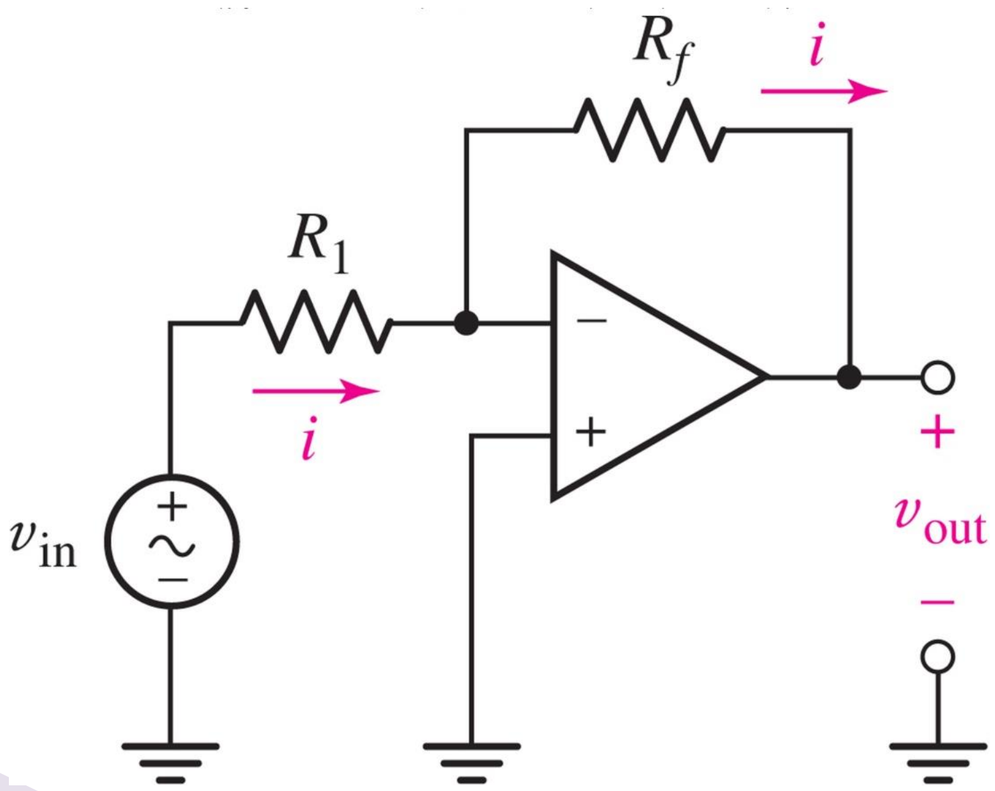

$$v_{out} = -\frac{R_f}{R_1} v_{in}$$

Example

- $v_{in}(t) = 5\sin 3t\ mV, R_f = 47K\Omega, R_1 = 4.7\text{K}\Omega$

$$\boldsymbol{v_{out}(t) = -50\ sin\ 3t\ mV}$$

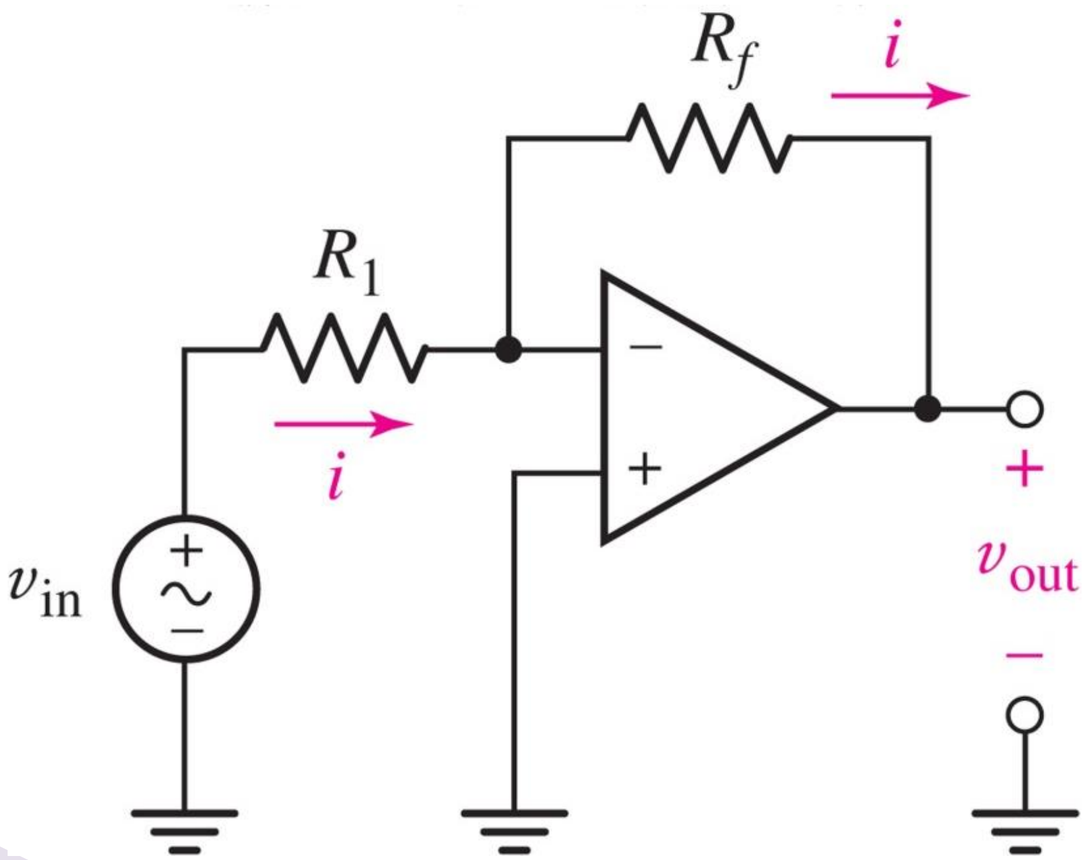

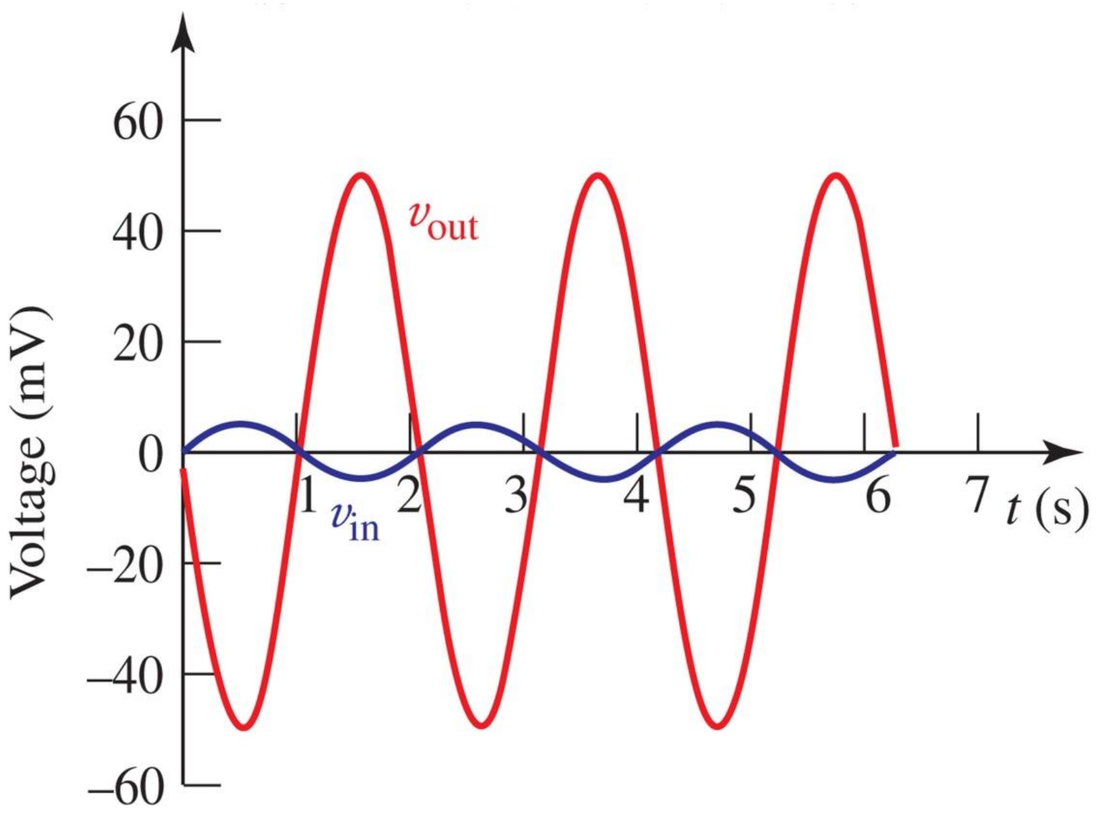

Non-Inverting Amplifier

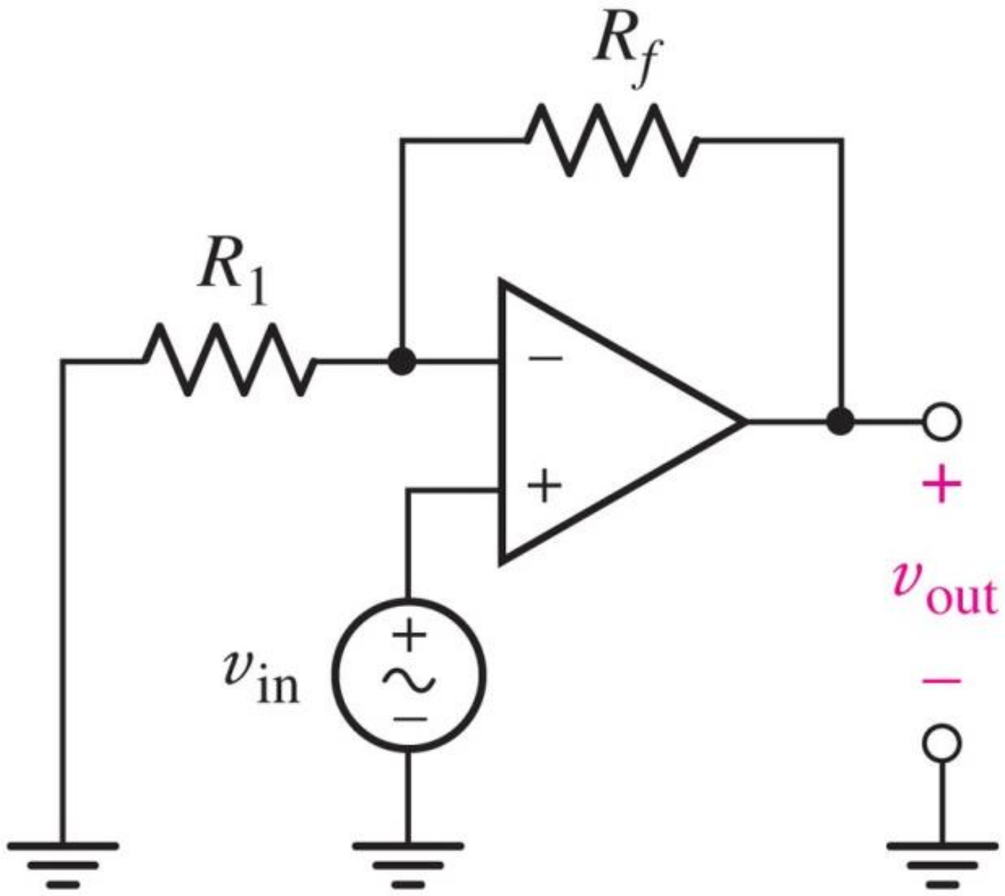

$$v_{out} = \left(1 + \frac{R_f}{R_1}\right) v_{in}$$

Voltage Follower (Buffer)

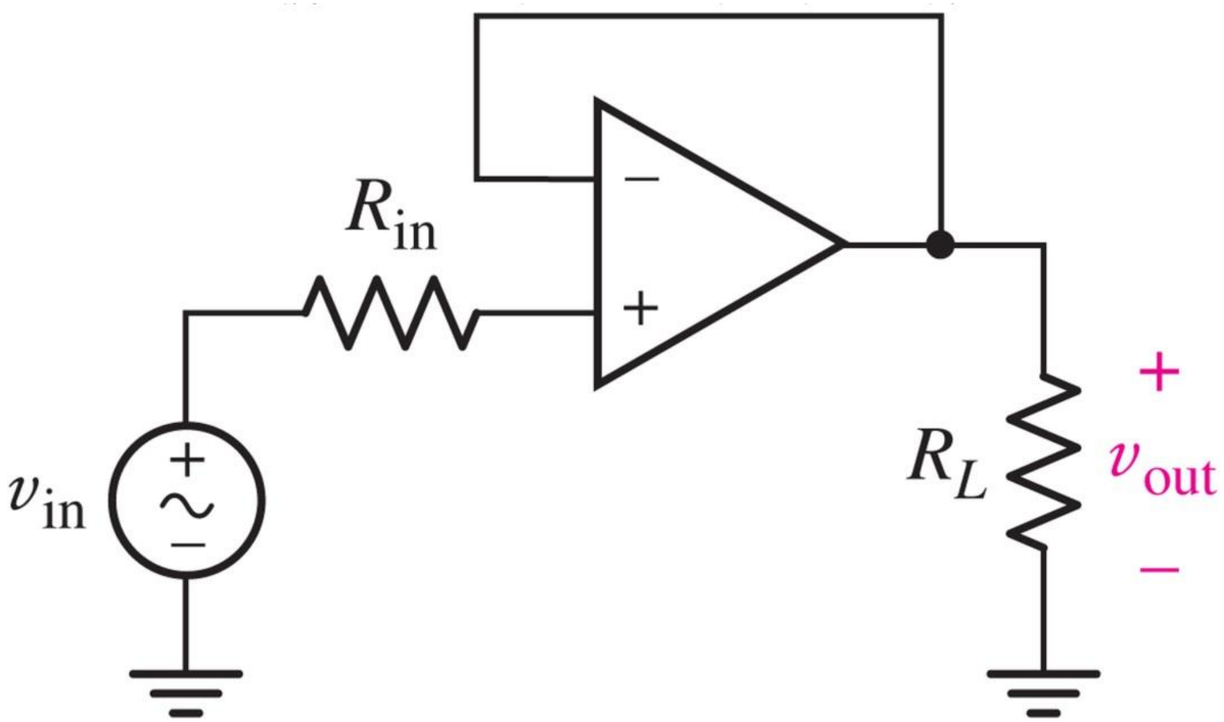

$$v_{out}(t) = vin(t)$$

1.The output voltage of the buffer is independent of the load resistance (R_L). The buffer can supply the required current to maintain a constant output voltage, even if R_L changes.

2.This circuit eliminates the effect of the source's input resistance by presenting a very high input resistance to the source and a very low output resistance to the load.

Analog Summing Circuit

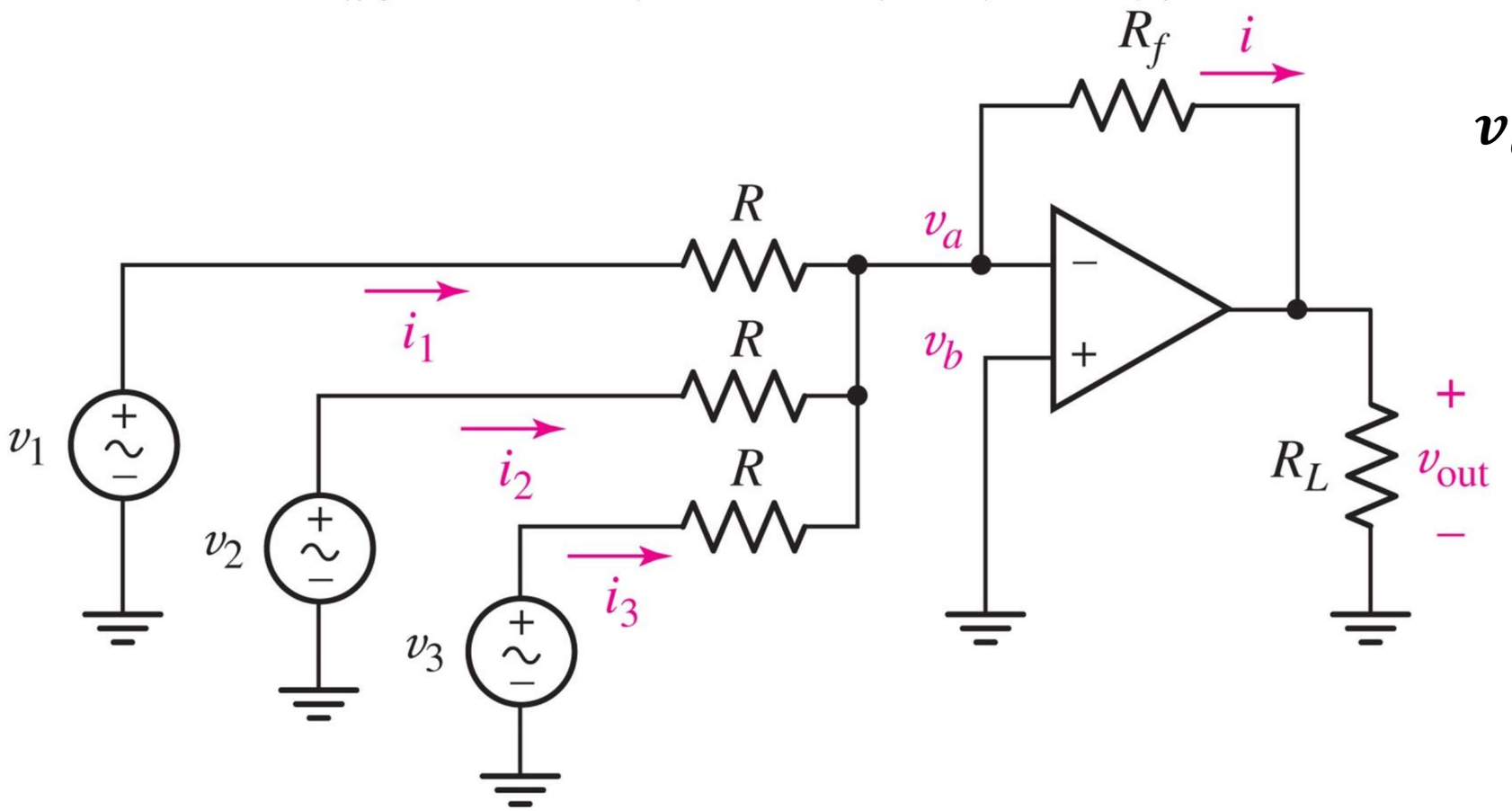

$$v_{out} = -\frac{R_f}{R}(v_1 + v_2 + v_3)$$

✓ This circuit performs the addition of input signals and amplifies the result by a factor of $-\frac{R_f}{R}$.

Cascading Multiple Operational Amplifiers

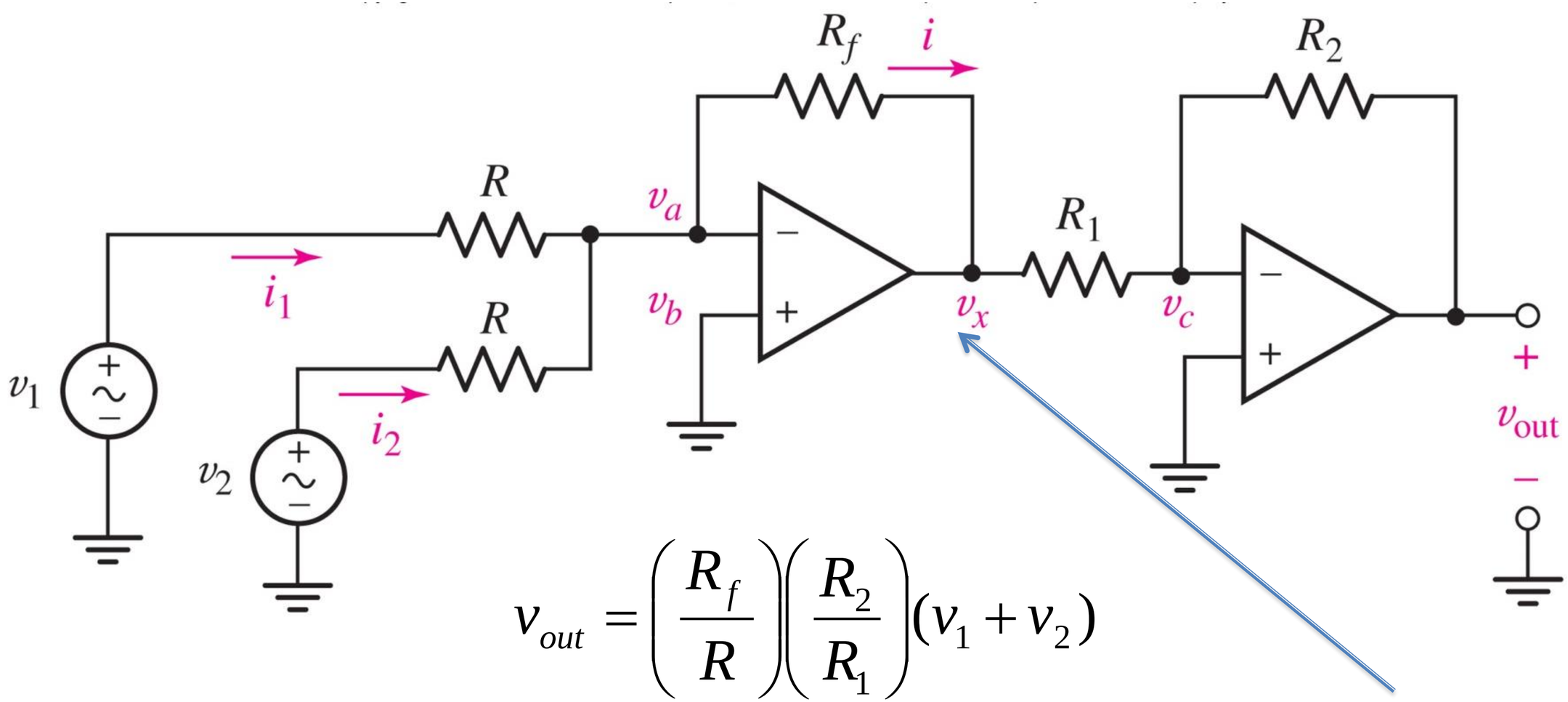

$$v_{out} = \left(\frac{R_f}{R}\right)\left(\frac{R_2}{R_1}\right)(v_1 + v_2)$$

- ✓ The output voltage of each stage is independent of the subsequent stage. **(Why?)**
- ✓ As a result, **Op-Amp** can be cascaded without any alteration in their individual gains.

Op-Amp as an Ideal Voltage Source

$$v_{out} = \left(1 + \frac{R_f}{R_1}\right) V_Z$$

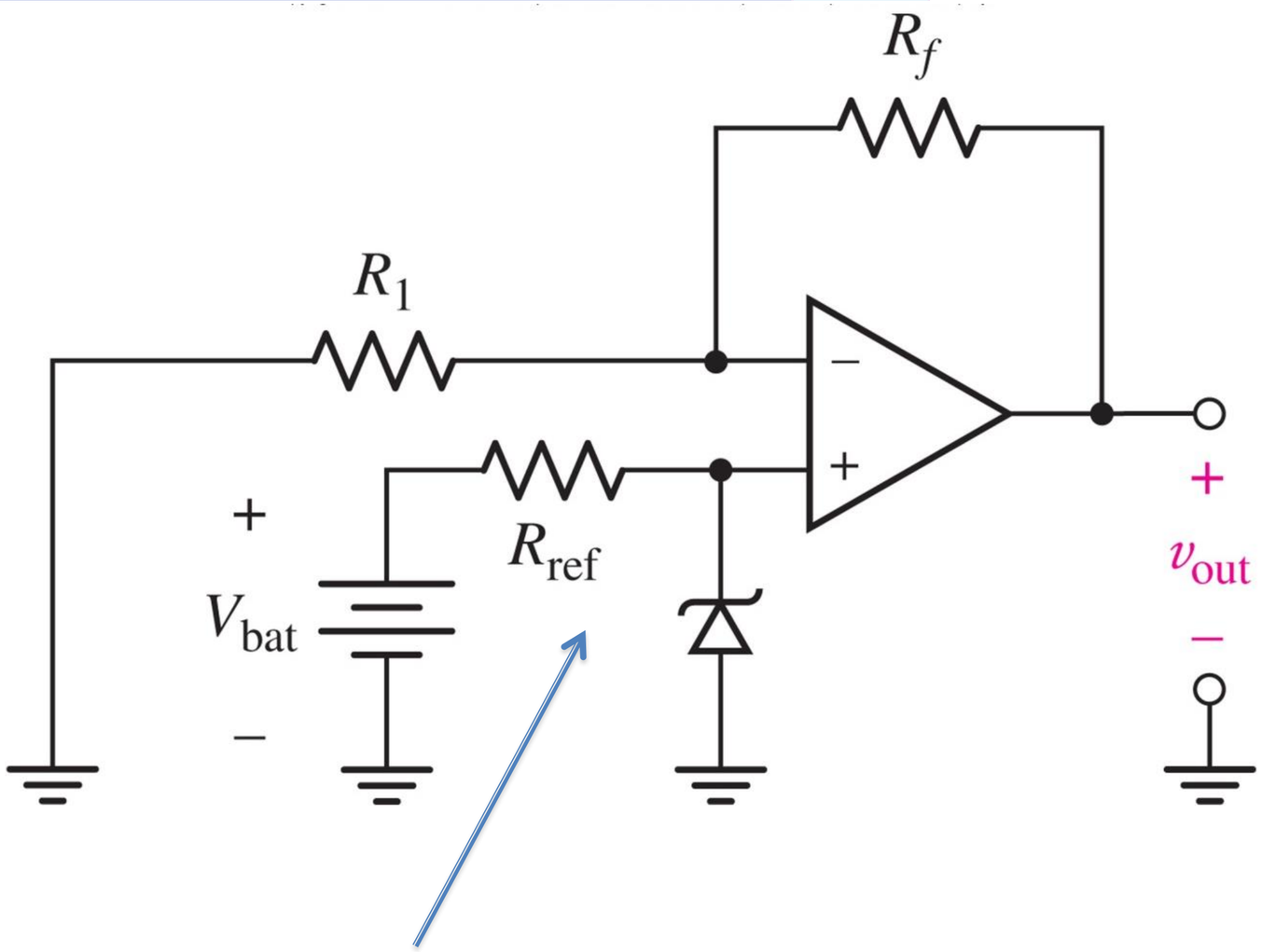

This circuit resembles the voltage regulator using a Zener diode, which we have encountered before.

Op-Amp as an Ideal Current Source

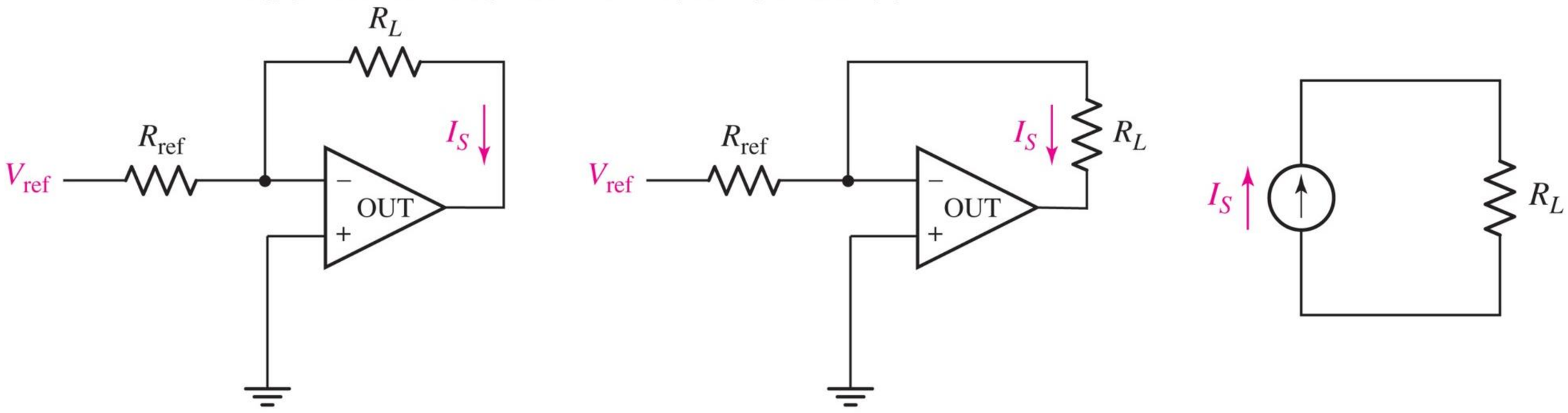

- Using a reference voltage V_{ref} and a resistor V_{ref}, an ideal current source can be constructed with a current:

$$\boldsymbol{I_S = \frac{V_{ref}}{R_{ref}}}$$

- This current is independent of the load resistance R_L,

Power Supplies for Op-Amp

- An operational amplifier requires power to function and perform amplification. Therefore, it must be connected to a power supply.
- Typically, equal and opposite voltage values are applied to the V^+ and V^- terminals. These voltage levels usually range between ±5V and ±24V.
- The ground of the power supplies must be connected to the input and output ground reference of the circuit to ensure proper operation and signal integrity.

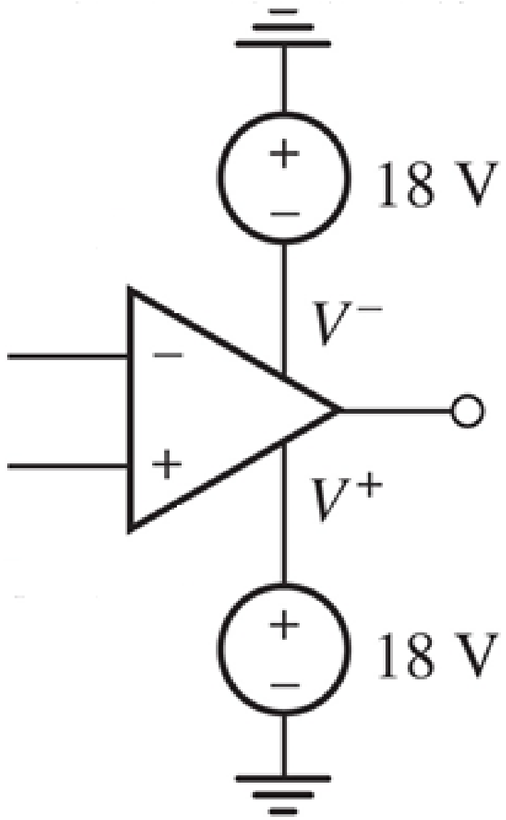

Output Saturation

- ✓ If the input signal is such that the amplified output exceeds V^+ or falls below V^-, the output will saturate.
- ✓ In this state, the output voltage remains clamped at V^+ or V^-, depending on the direction of the input signal.

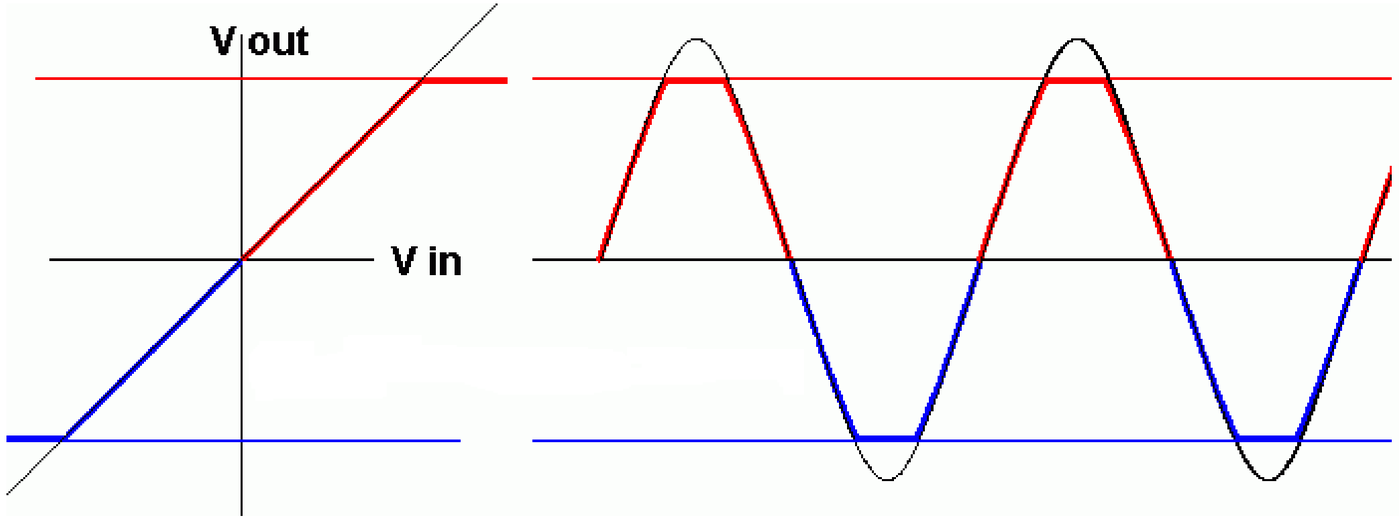

The output signal enters saturation and becomes clipped

Role of Negative Feedback

- The role of negative feedback is to transform a large and undefined gain into a fixed, controlled gain.
- Why Don't We Apply Feedback to the Positive Terminal?

$$v_+ \uparrow \;\rightarrow\; v_d \uparrow \;\xrightarrow{v_{out} = Av_d}\; v_{out} \uparrow \;\rightarrow\; v_- \uparrow \;\rightarrow\; v_d \downarrow \;\ldots$$

- Thus, the negative feedback stabilizes the operation by keeping v_d close to zero

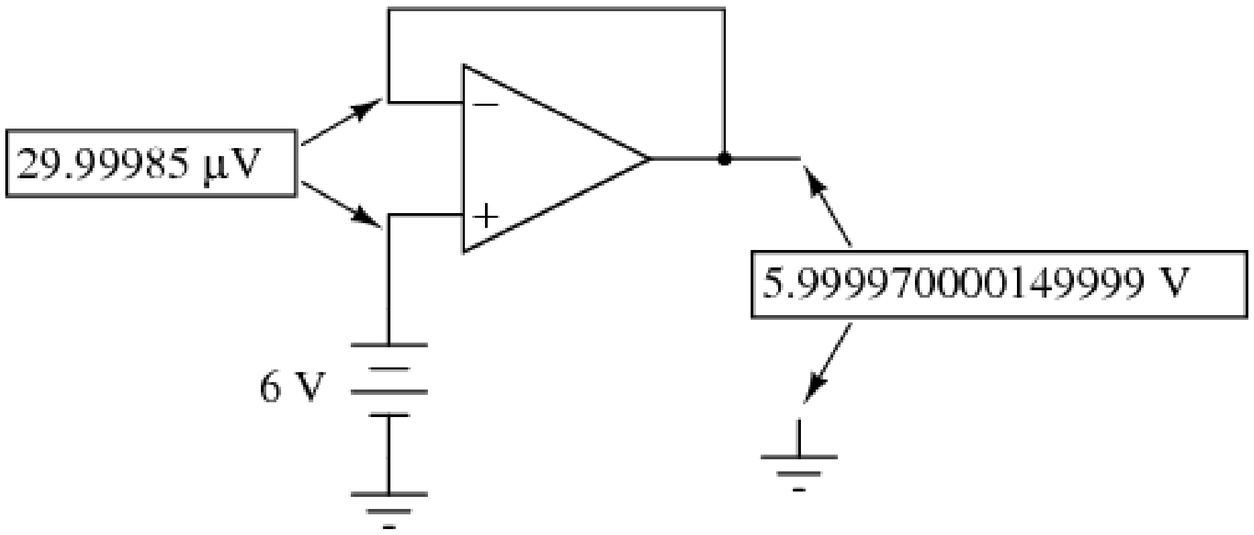

Voltage Comparator

- An operational amplifier can be used as a voltage comparator when operated in open-loop configuration (without feedback).

$$v_{out} = \begin{cases} 12 & v_{in} < 2.5 \\ -12 & v_{in} > 2.5 \end{cases}$$

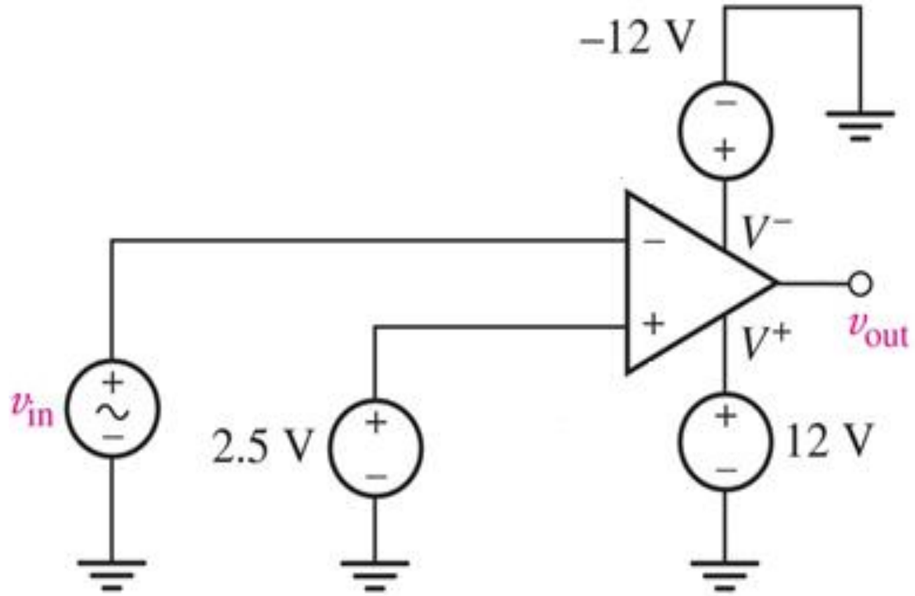

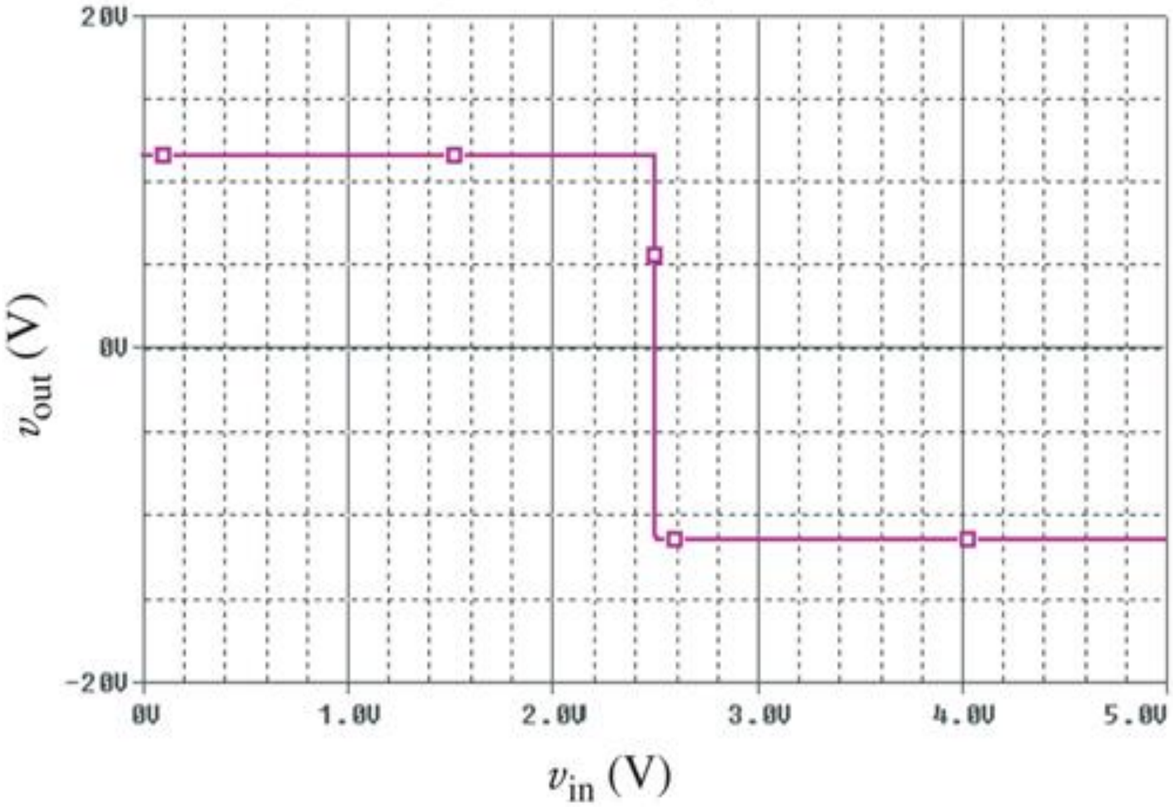

Example

Assume we have a temperature sensor that generates a voltage ranging from 0 to 5 volts for temperatures between 0 and 100 degrees Celsius. Design a circuit that provides a logical output of 1 when the temperature is below 60 degrees.

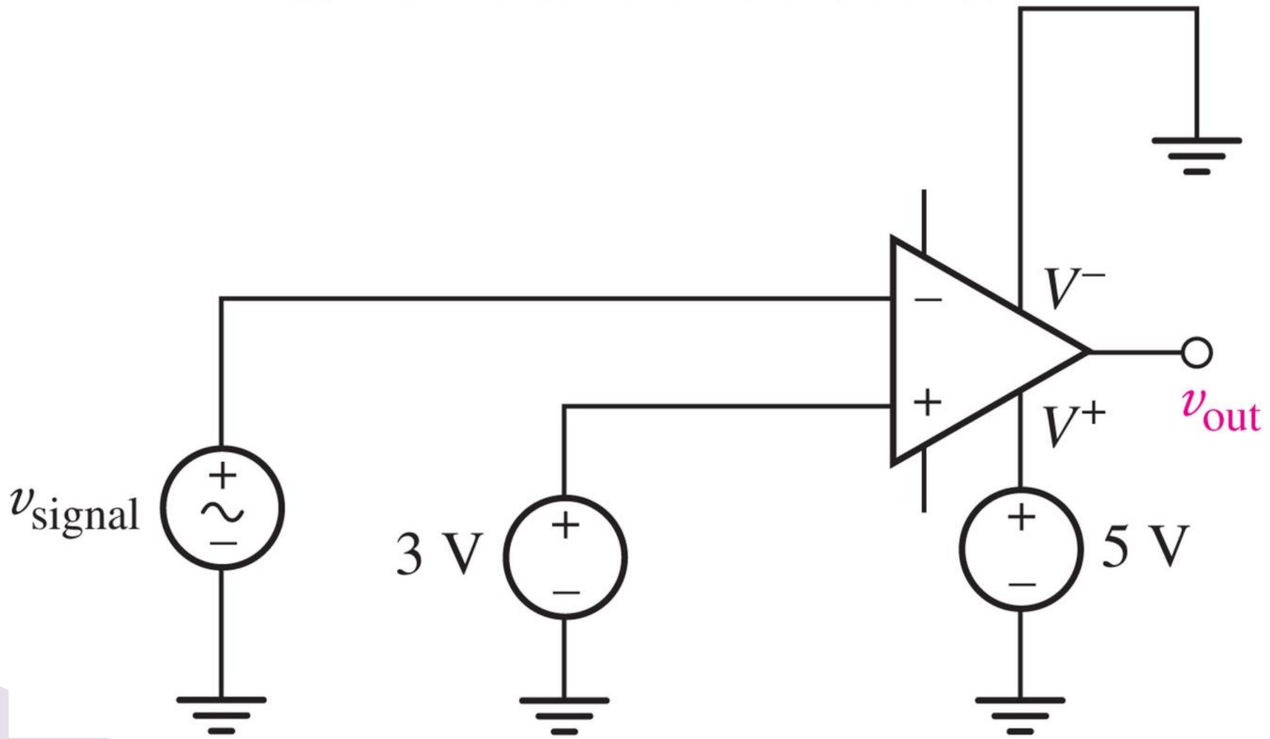

Similarity of Non-Inverting Amplifier to a Lever

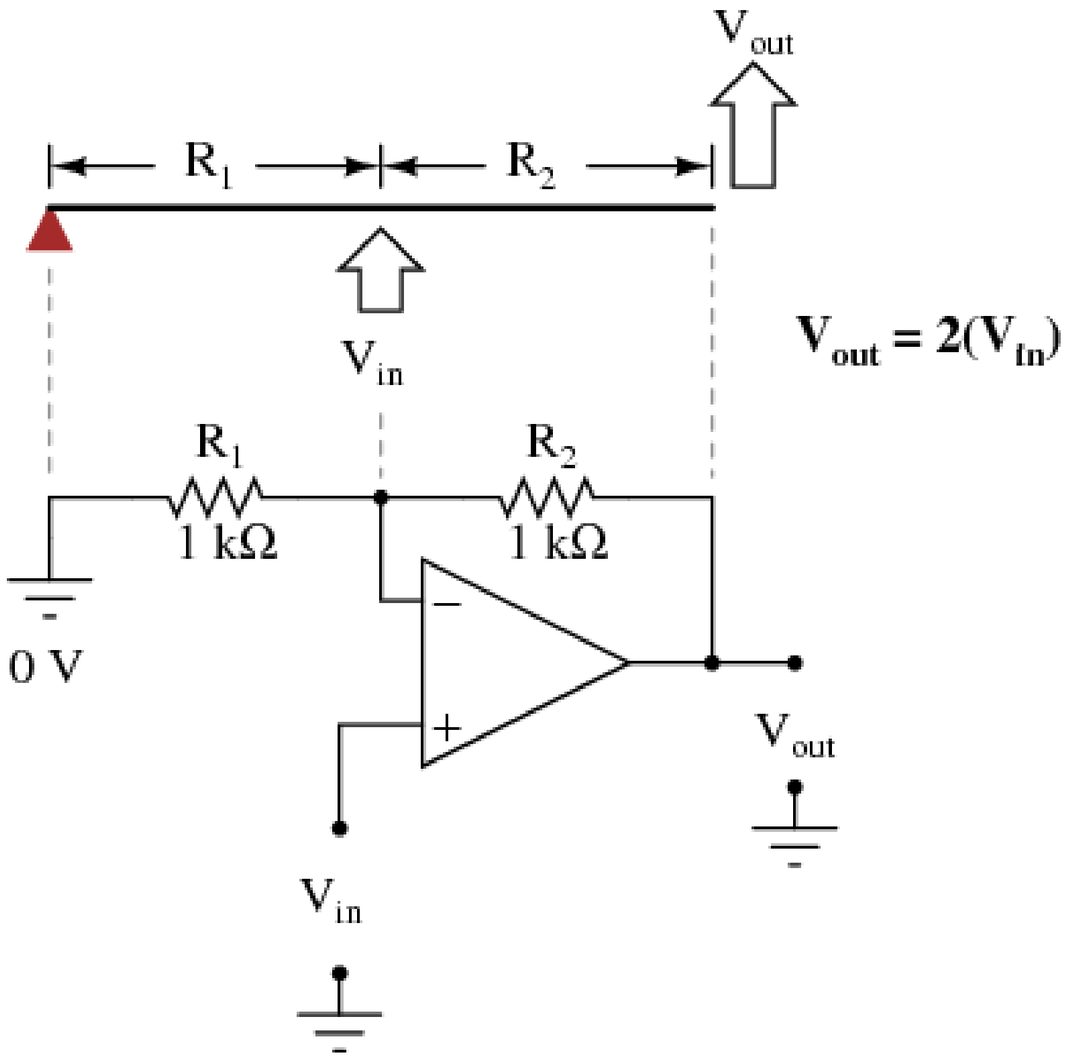

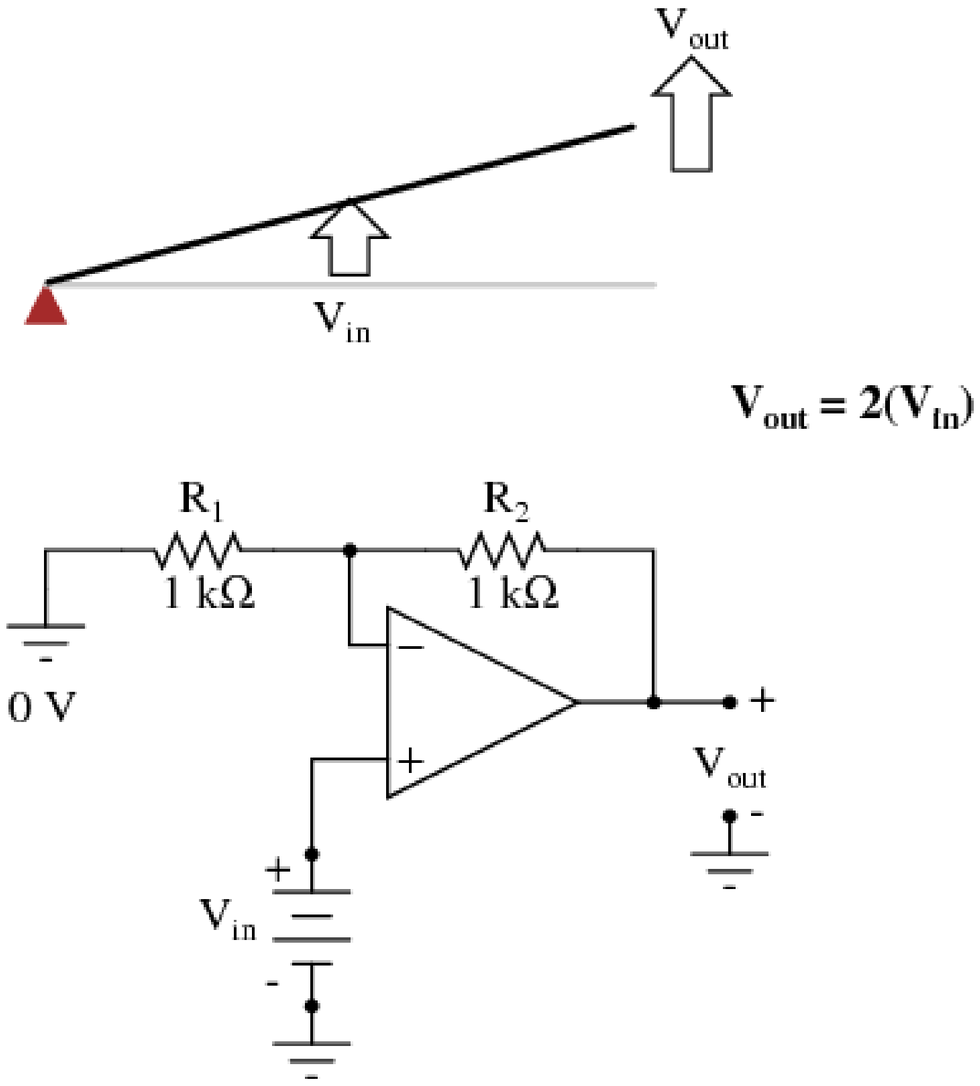

Similarity of Non-Inverting Amplifier to a Lever

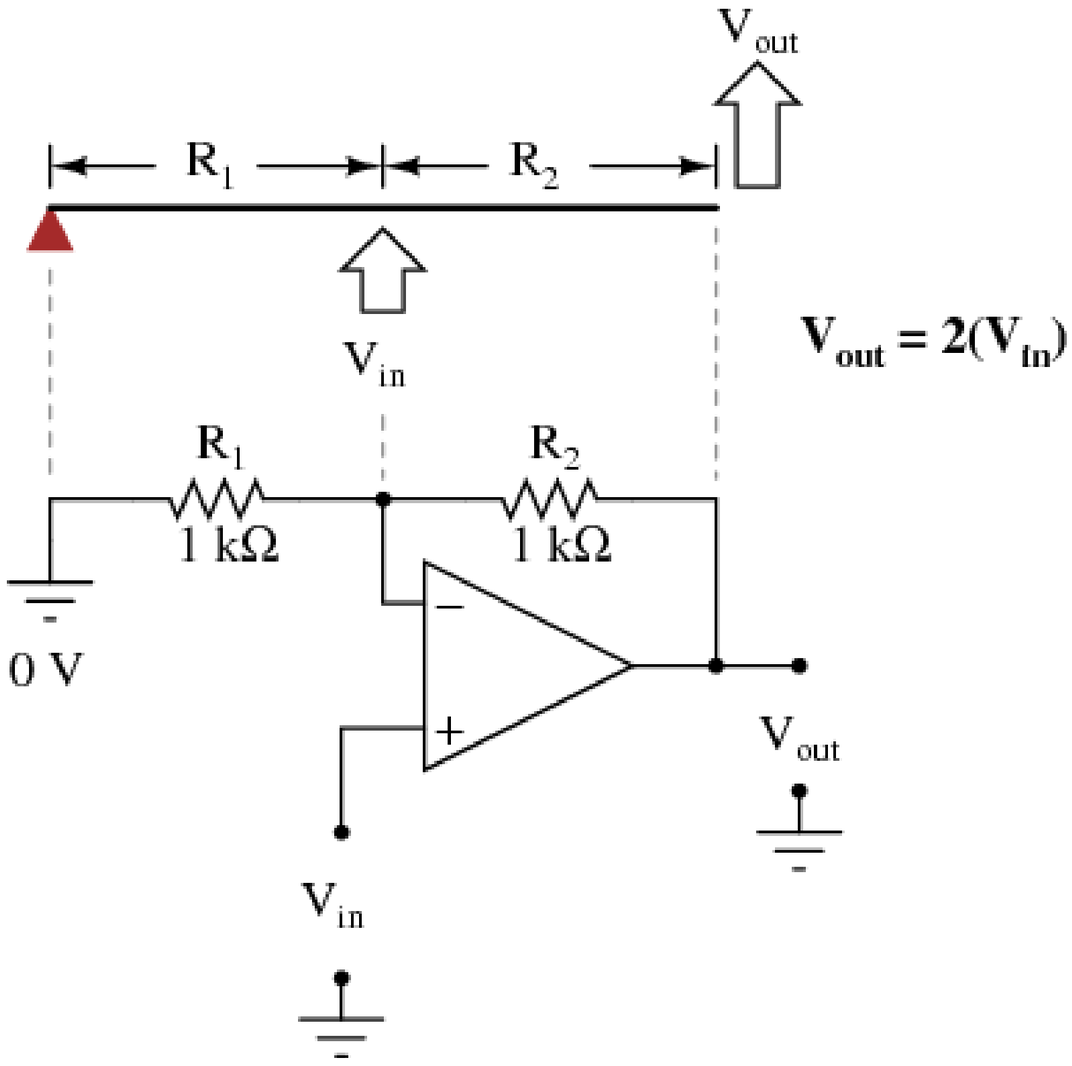

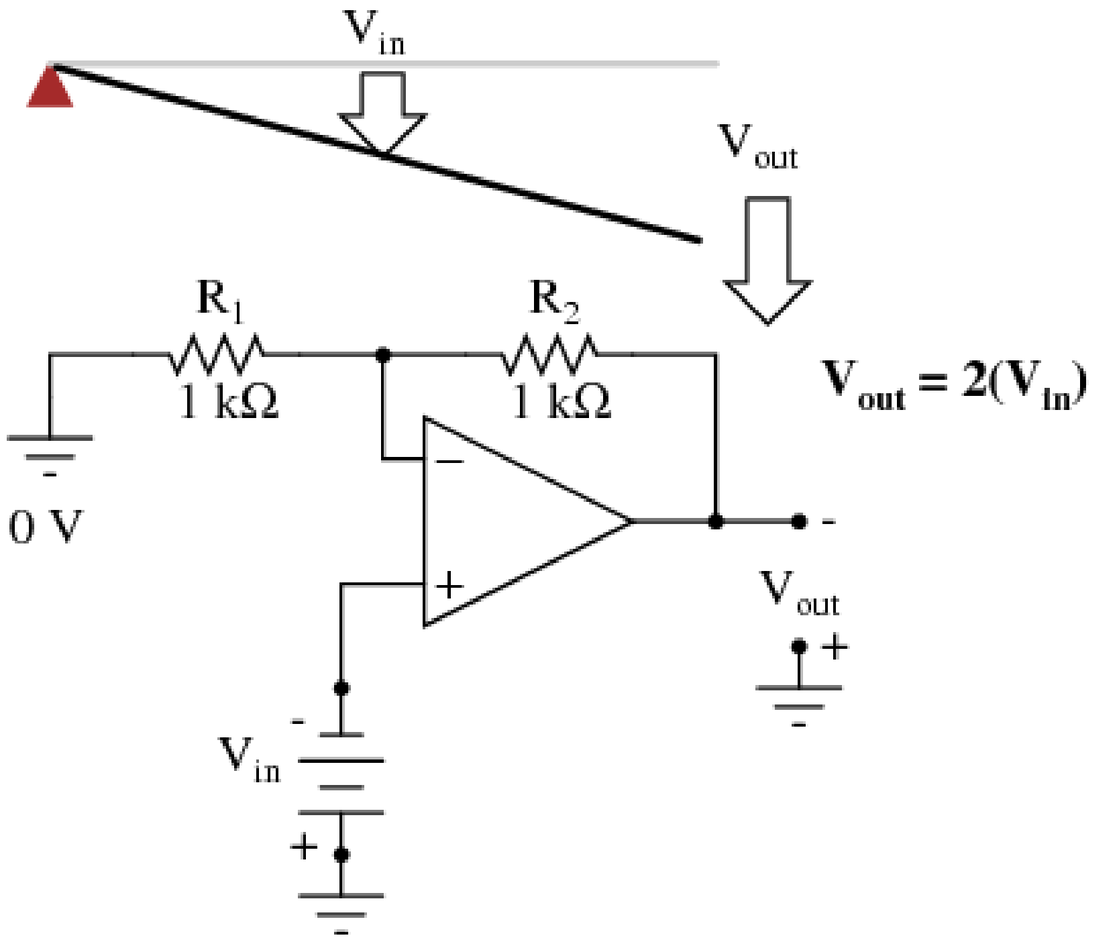

Similarity of Non-Inverting Amplifier to a Lever

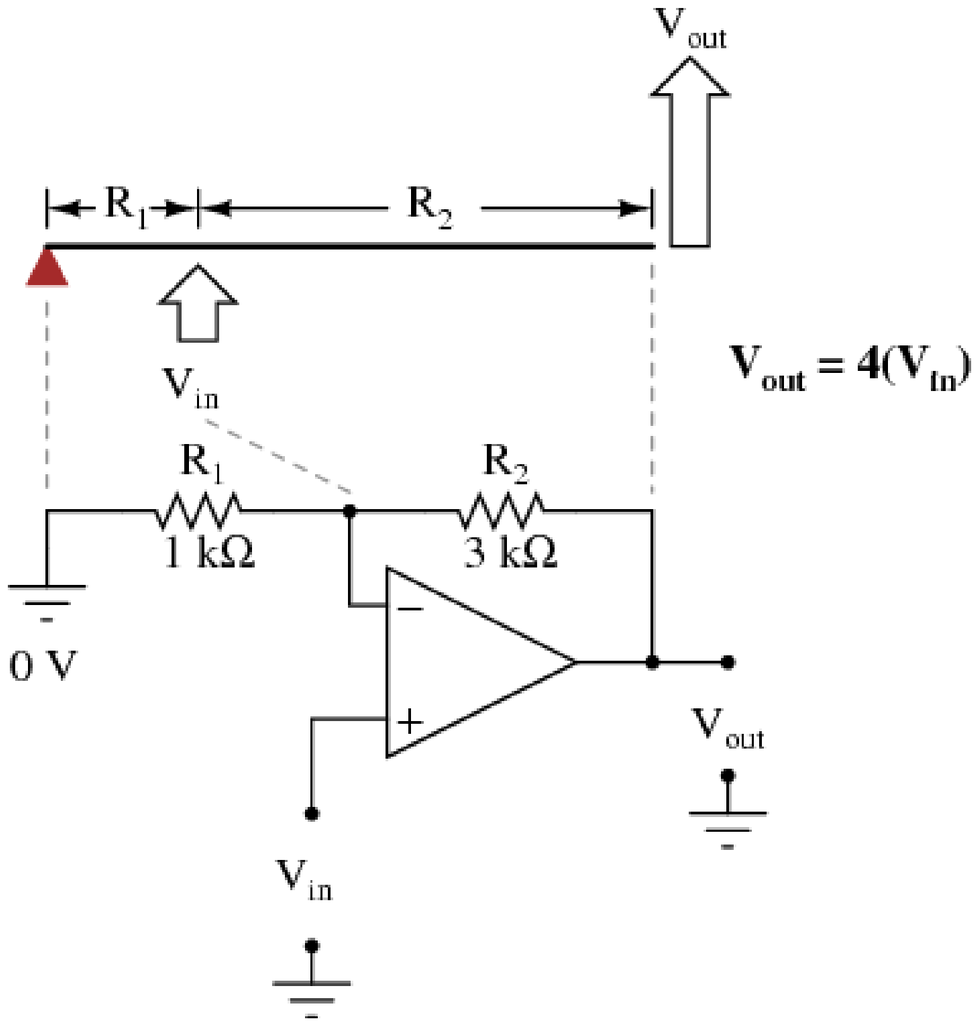

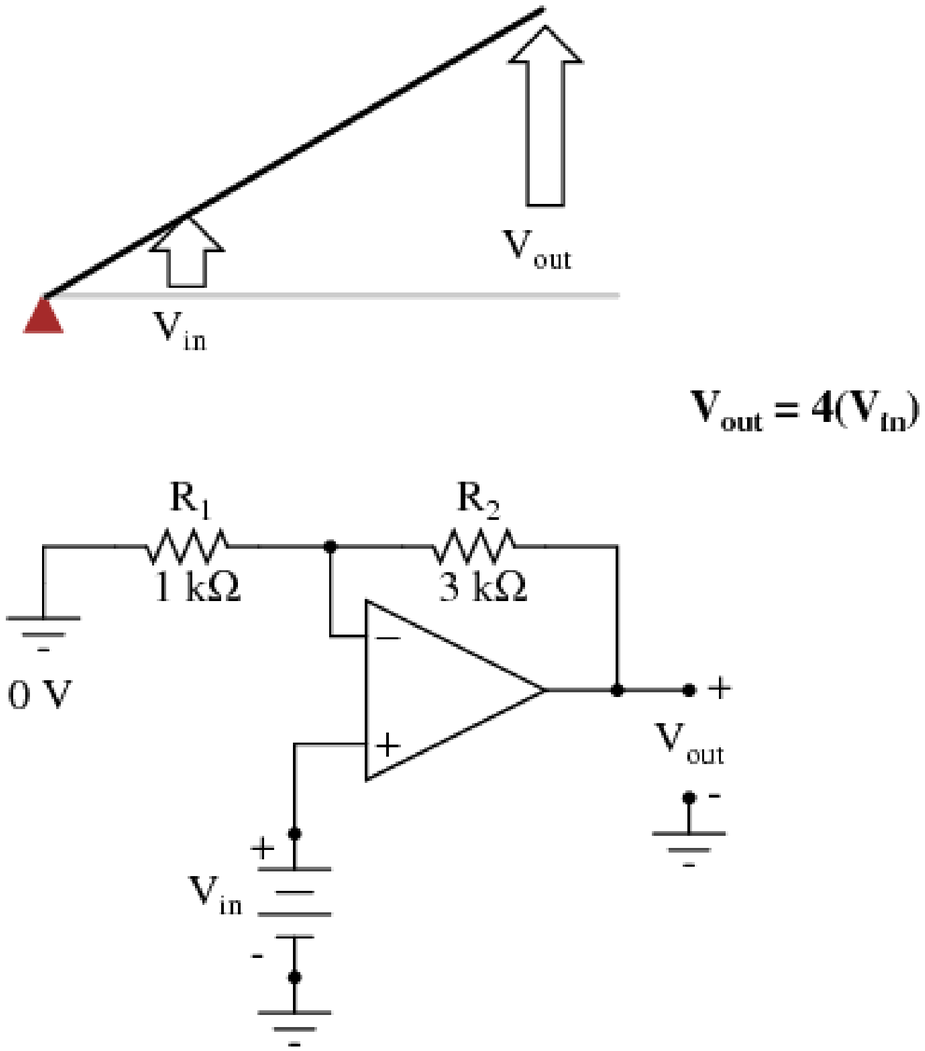

Class Exercise 1

V_1=?

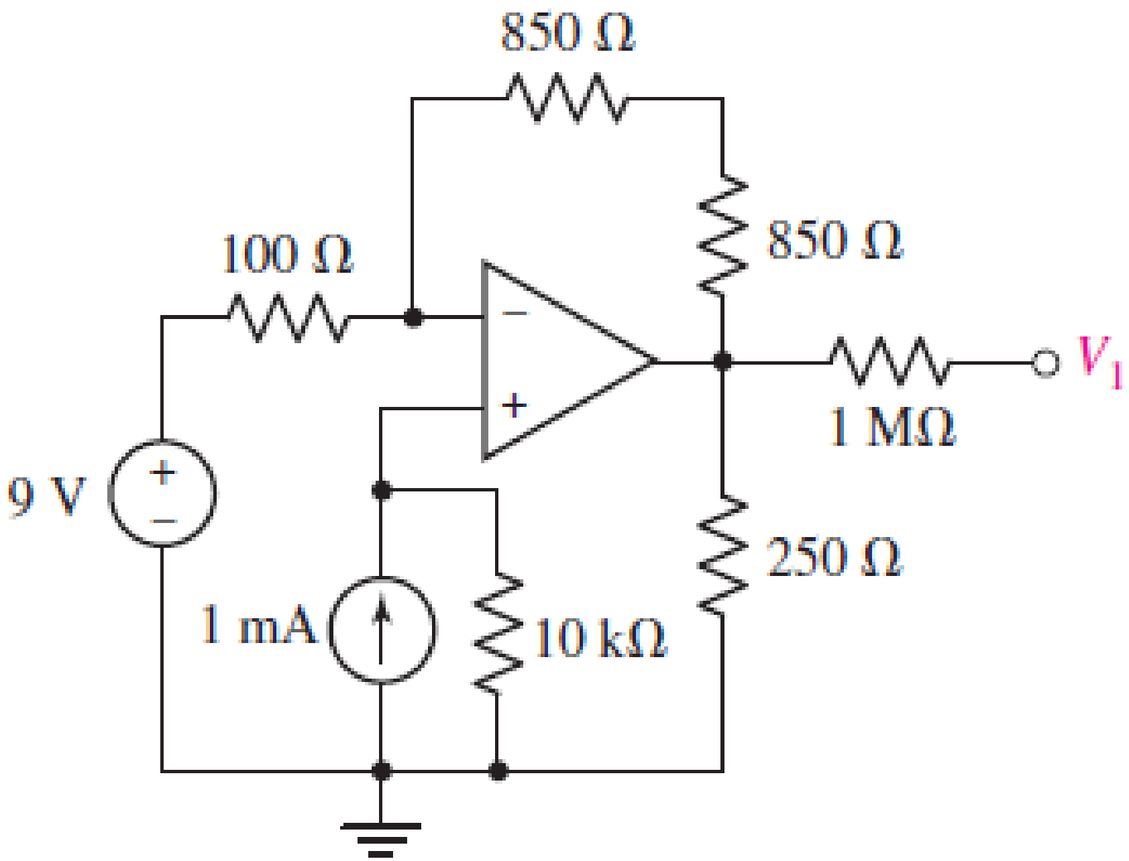

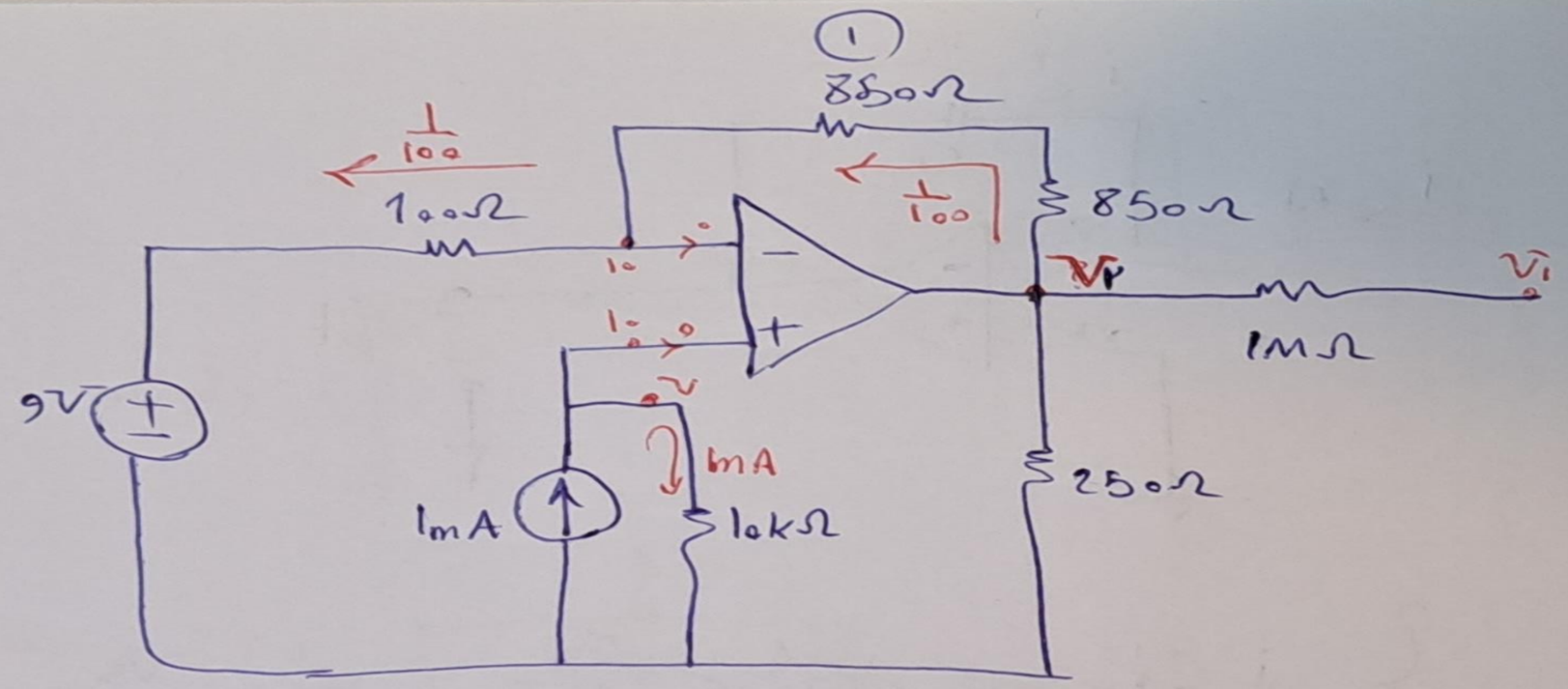

$V = 10K \times 1m = 10V$

$\frac{V_2 - 10}{1700} = \frac{1}{100} \Rightarrow V_2 - 10 = 17 \Rightarrow V_2 = 27V$

چونکه V_1 روی هوا است و هیچ جریانی از آن عبور نمی کند $V_1 = V_2$ و برابر $27V$ هستند.

Class Exercise 2

$V_{out} = ?$

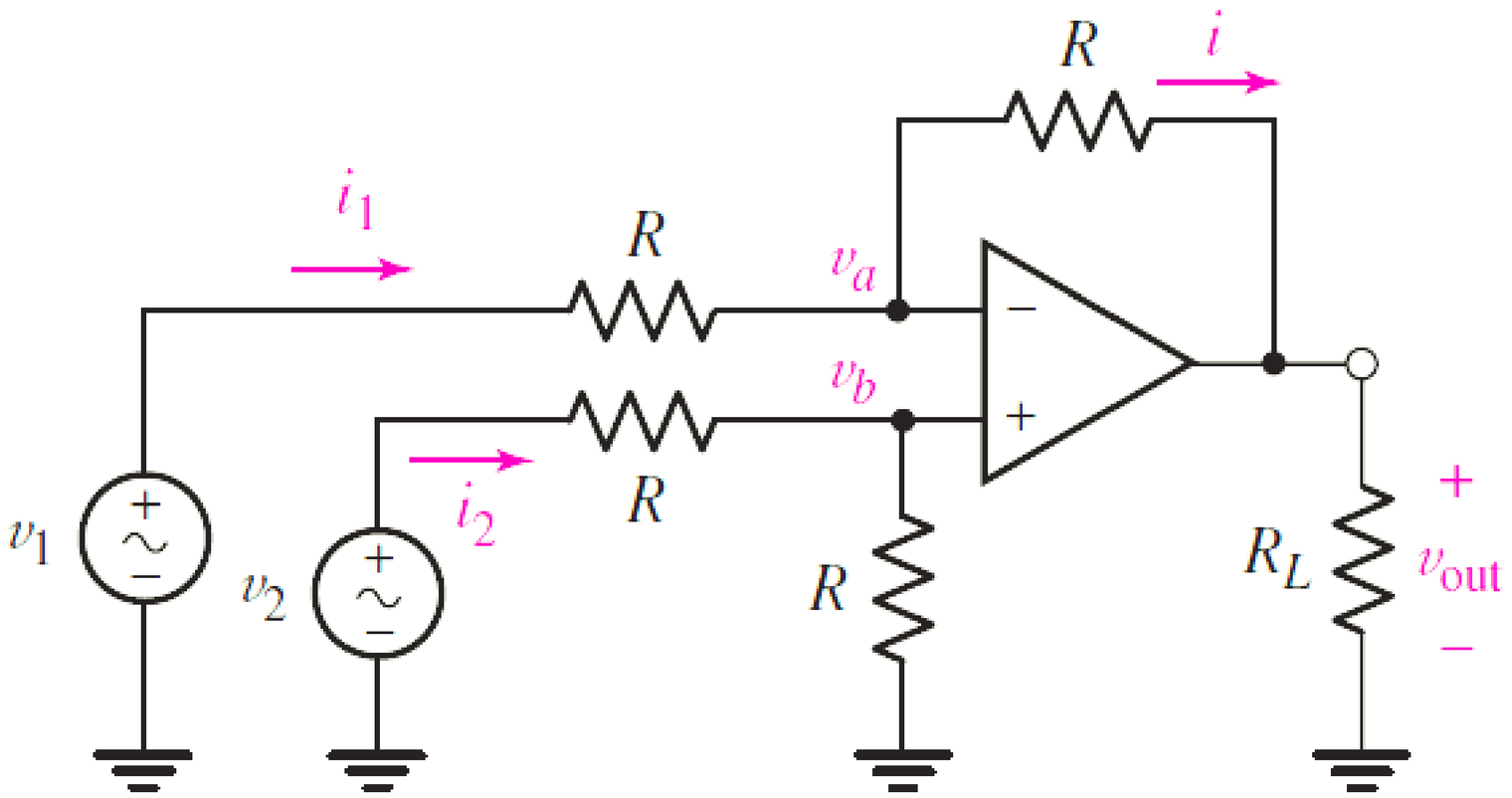

۲

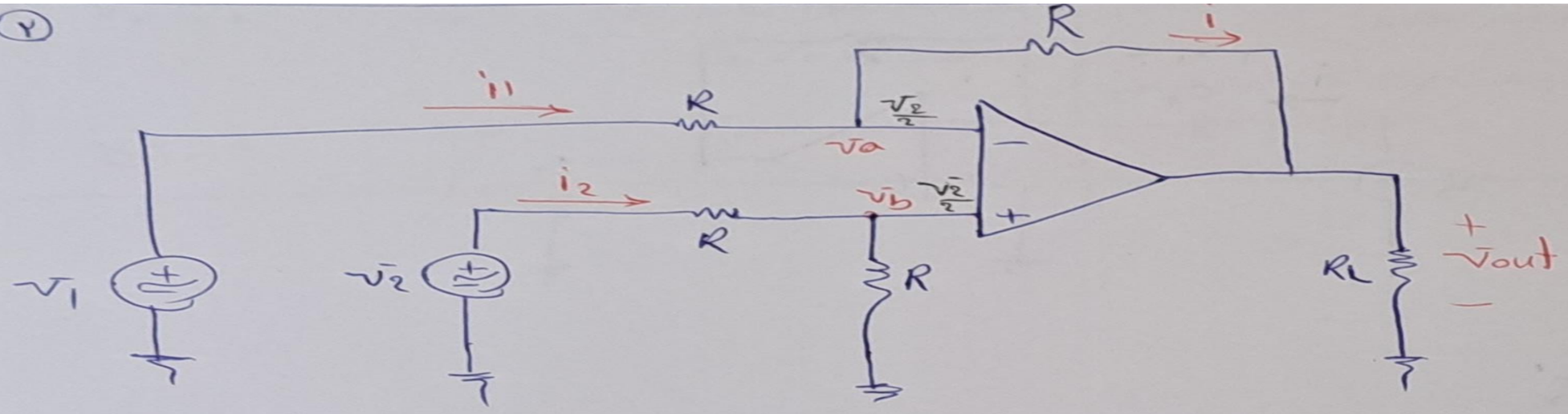

$v_b = \frac{v_2}{2}$ تقسیم ولتاژ بین دو تا R

$i_1 = \frac{v_1 - \frac{v_2}{2}}{R}$

$i_1 = i = \frac{\frac{v_2}{2} - v_{out}}{R}$

$$\frac{v_1 - \frac{v_2}{2}}{\cancel{R}} = \frac{\frac{v_2}{2} - v_{out}}{\cancel{R}}$$

$$\boxed{v_{out} = v_1 - v_2}$$

۱

Class Exercise 3

$V_{out} = ?$

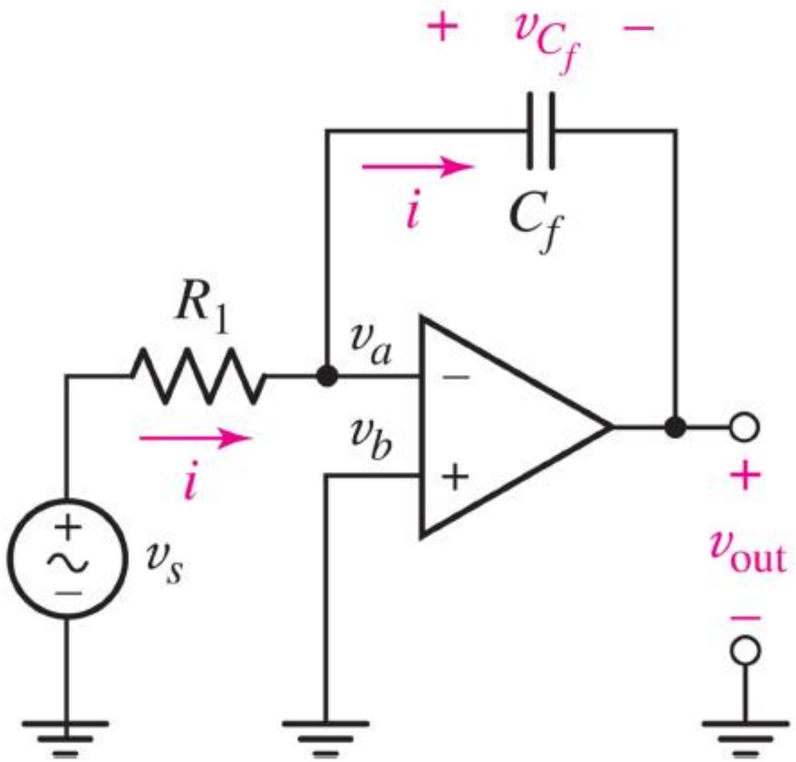

$$v_{\text{out}} = -\frac{1}{R_1 C_f}\int_0^t v_s\, dt' - v_{C_f}(0)$$

۳

مدار انتگرال گیر

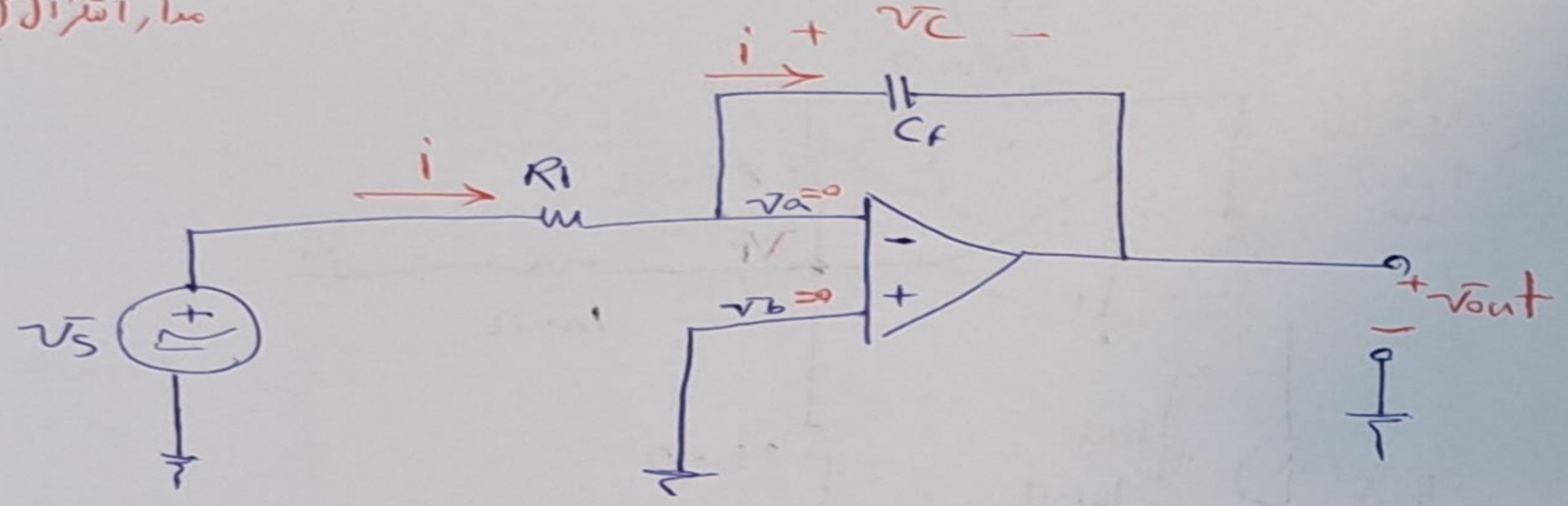

$$i_0 = \frac{v_S}{R_1}$$

جریان خازن $i = C_F v_{CF}'$

$$v_{CF}' = \frac{v_S}{R C_F}$$

$$v_{CF} = \frac{1}{C_F}\int_0^t i + v_{CF}(0^+)$$

$$-v_{out} - v_{CF} = 0 \Rightarrow v_{out} = -v_{CF}$$

اگر انتگرال بگیریم $\Rightarrow$ $v_{out} = \frac{-1}{C_F}\int \frac{v_S}{R_1}\,dt - v_{CF}(0^+) = \frac{-1}{RC_F}\int_0^t v_S\,dt - v_{CF}(0^+)$

Class Exercise 4

$V_{out} = ?$

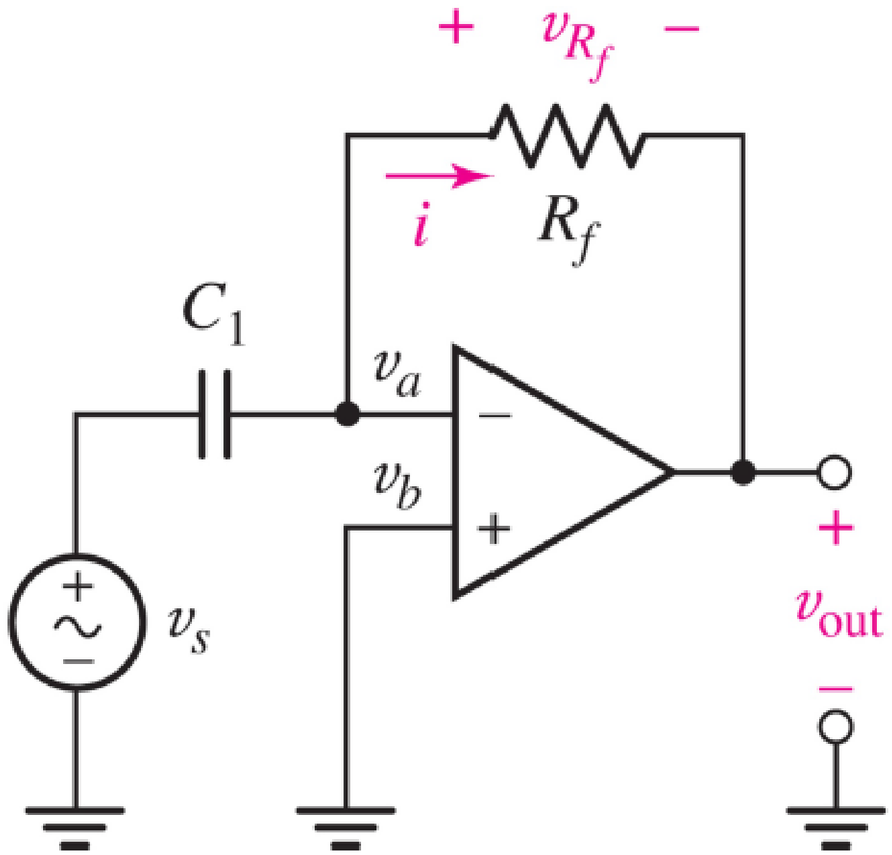

$$v_{out} = -C_1 R_f \frac{dv_s}{dt}$$

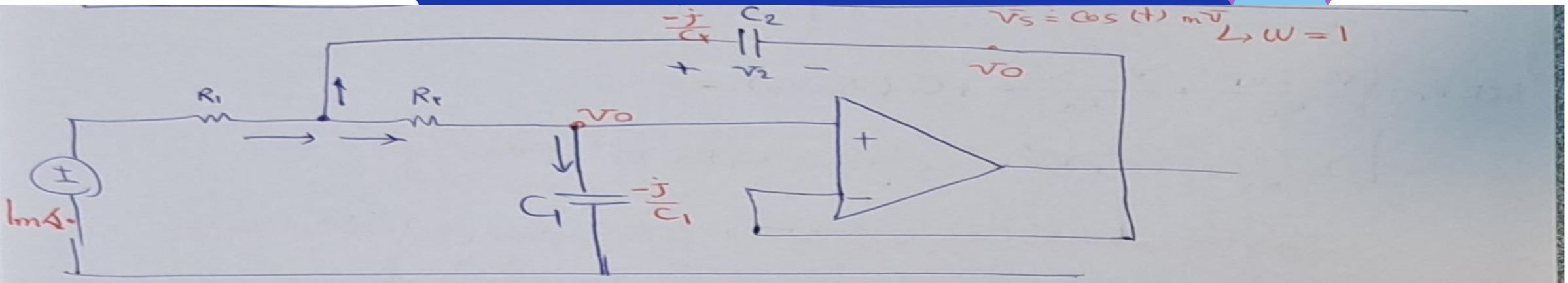

$$\text{KCL-}v_1: \begin{cases} \dfrac{I_m - v_1}{R_1} + \dfrac{v_1 - v_o}{R_2} + \dfrac{v_1 - v_o}{-j/C_2} \\[2ex] \dfrac{v_1 - v_o}{R_2} = \dfrac{v_o}{-j/C_1} \end{cases}$$

با استفاده از این معادله می‌توان v_1 را حذف کرد ⟸

با جایگذاری در رابطهٔ دوم می‌توان v_o را برحسب مقادیر ثابت بدست آورد.

v_o یک عدد مختلط ⟵ که باید به حوزه زمان برده شود.

$$* \quad \boxed{A e^{j\theta} \longrightarrow A \cos(t + \theta)}$$

Class Exercise 5

v_x=?

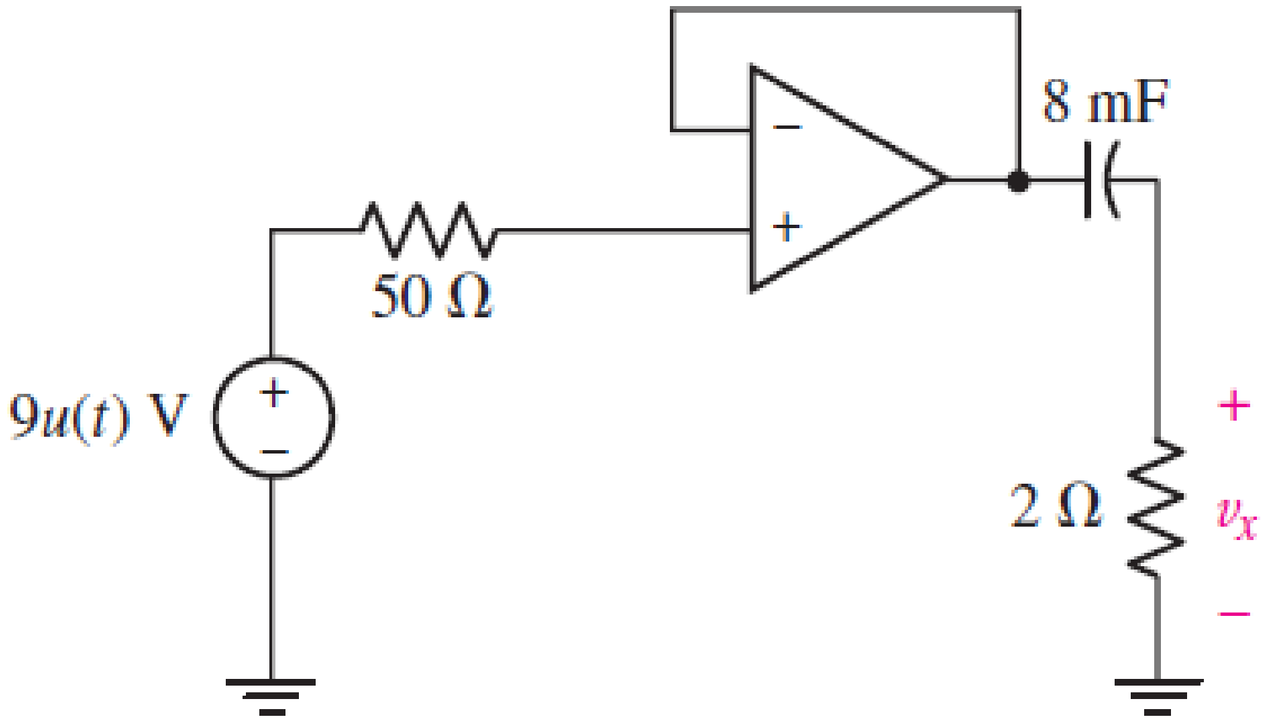

سؤال ۵

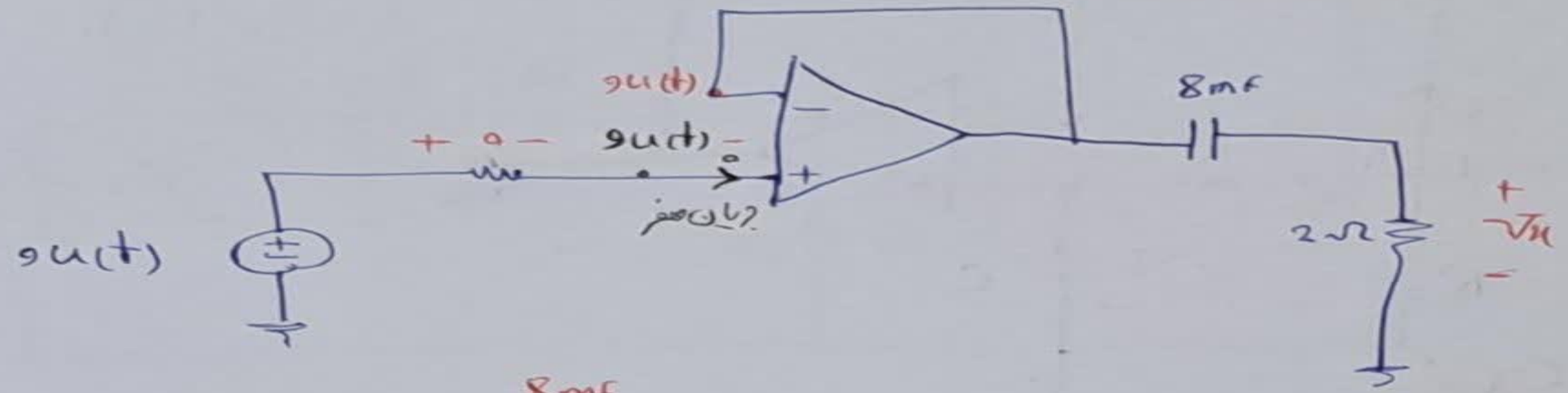

معادل باز

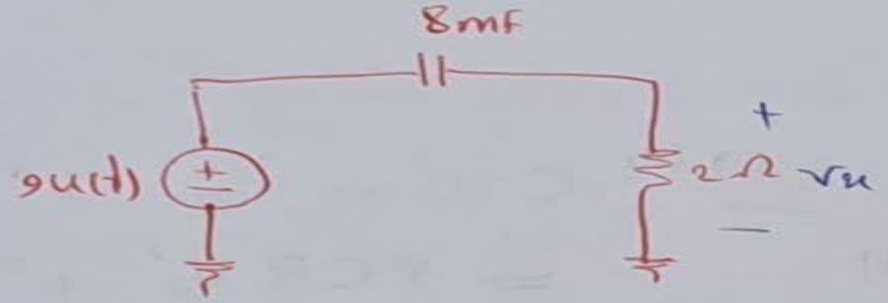

$$v_x = \cancel{V_\infty}^{\,0} + (\cancel{V_0}^{\,9} - \cancel{V_\infty}^{\,0})\, e^{-\frac{t}{16m}} = 9e^{-\frac{t}{16m}}$$

$V_\infty = 0 \Rightarrow$ ولتاژ دو سر خازن مدار باز شده در نتیجه $V_\infty = 0$

$V_x(0^+) = 9$

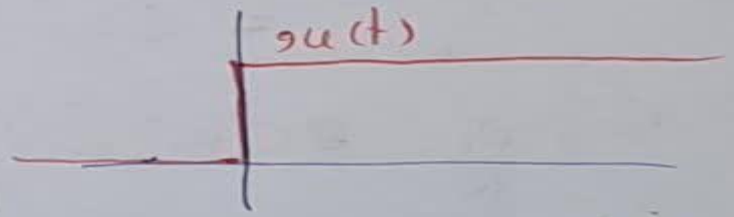

در لحظه صفر منفر در مدار سمت چپ در نتیجه $V(0^-) = 0$

$V_C(0^-) = V_C(0^+)$ و هر دو صفر هستند

در نتیجه در لحظه صفر مثبت ها ۹V روی دو سر مقاومت است

Class Exercise 6

If the initial voltage across the capacitor at time $t = 0$ is 10 volts, determine the output voltage v_o.

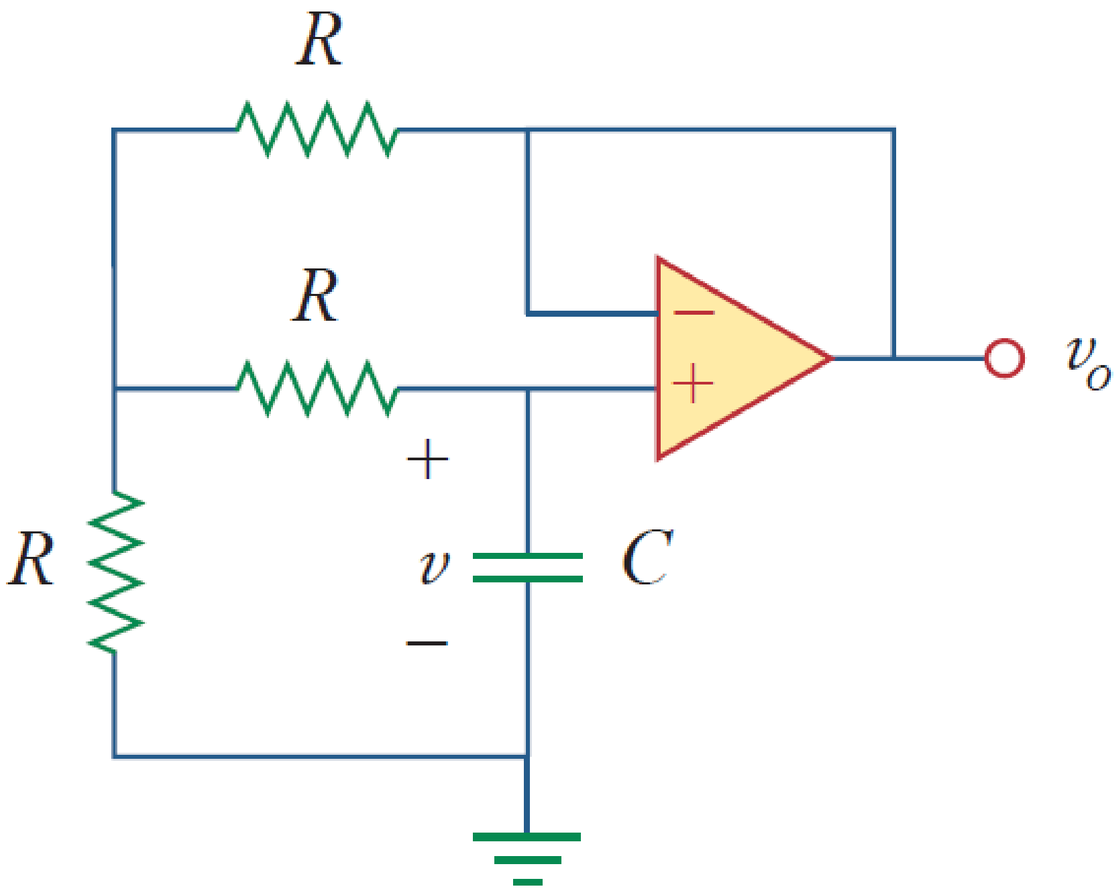

سؤال ⑥

اگر ولتاژ در لحظه $t=0$ برابر ۱۰ ولت باشد؟

$V(0^+)=10 \quad V_o=?$

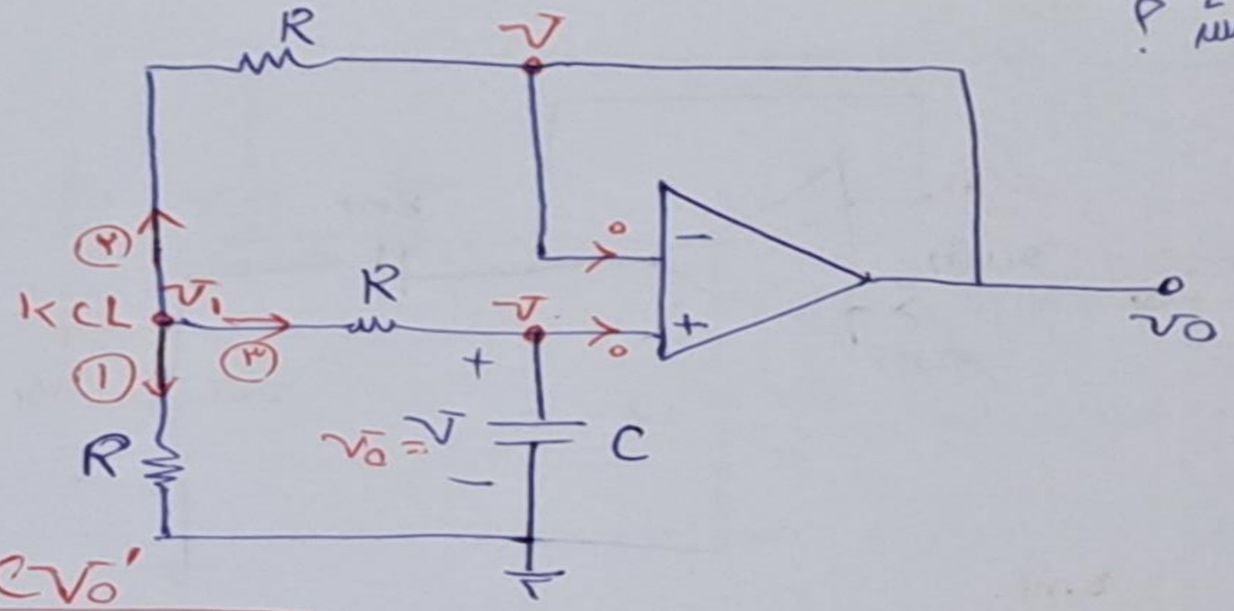

$V_o = V$

$$\frac{V_1}{R} + \underbrace{\frac{V_1 - V_o}{R} + \frac{V_1 - V_o}{R}}_{2CV_o'} \quad (1)$$

جریان ③

$$\frac{V_1 - V_o}{R} = CV_o' \quad (2)$$

$$\frac{V_1}{R} = CV_o' + \frac{V_o}{R} \quad (3)$$

$$\xrightarrow{(1),(3)} CV_o' + \frac{V_o}{R} + 2CV_o' = 0$$

$$\Rightarrow 3CRV_o' + V_o = 0$$

$$3CRS + 1 = 0 \Rightarrow S = \frac{-1}{3RC}$$

$$\Rightarrow V_o = 10\, e^{\frac{-t}{3RC}}$$

Class Exercise 7

- $v_s = 10u(t)mV, \;\; R_1 = R_2 = 10K\Omega, \; C_1 = 20\mu F, \;\; C_2 = 100\mu F$
- $v_o = ?$

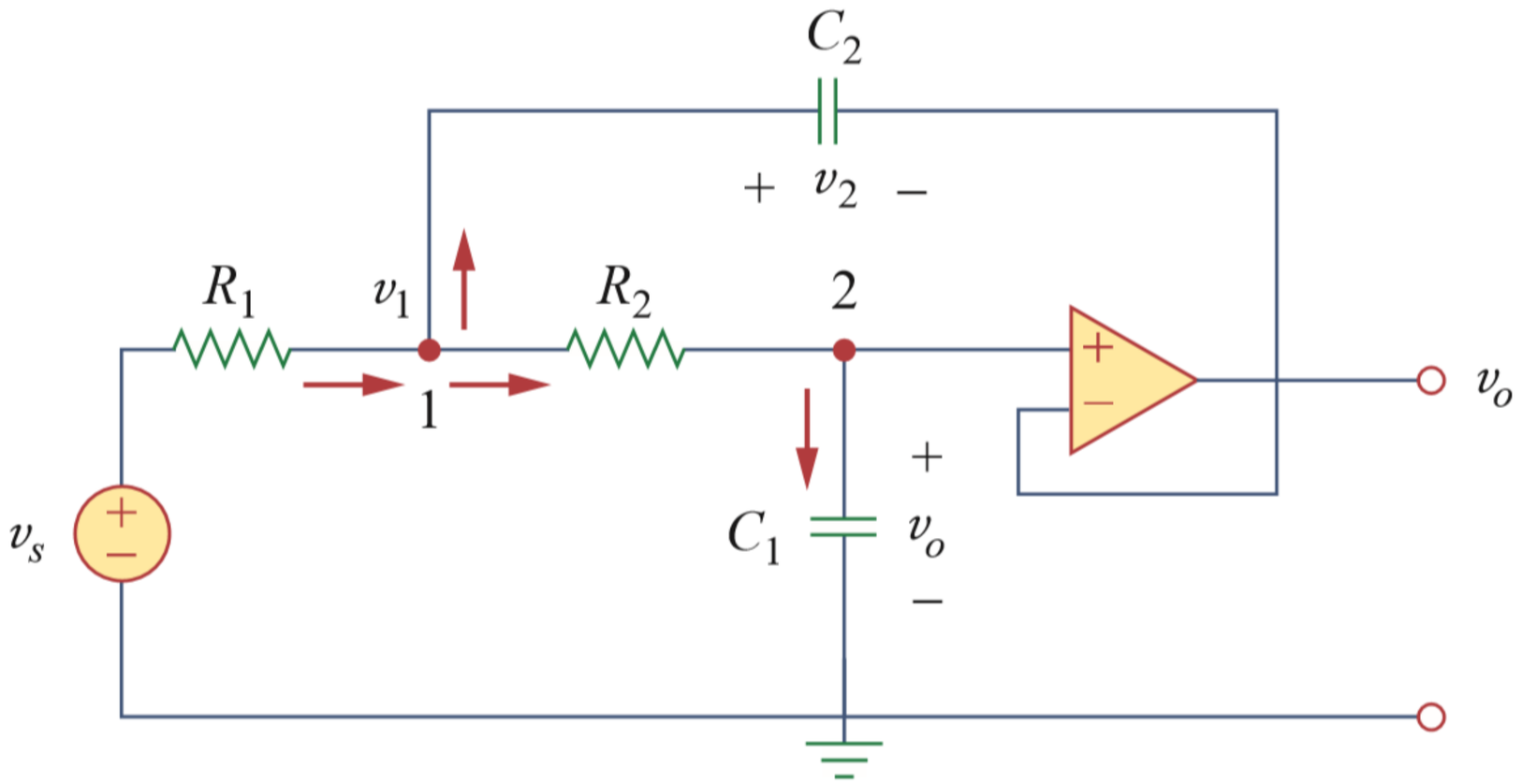

(۷)

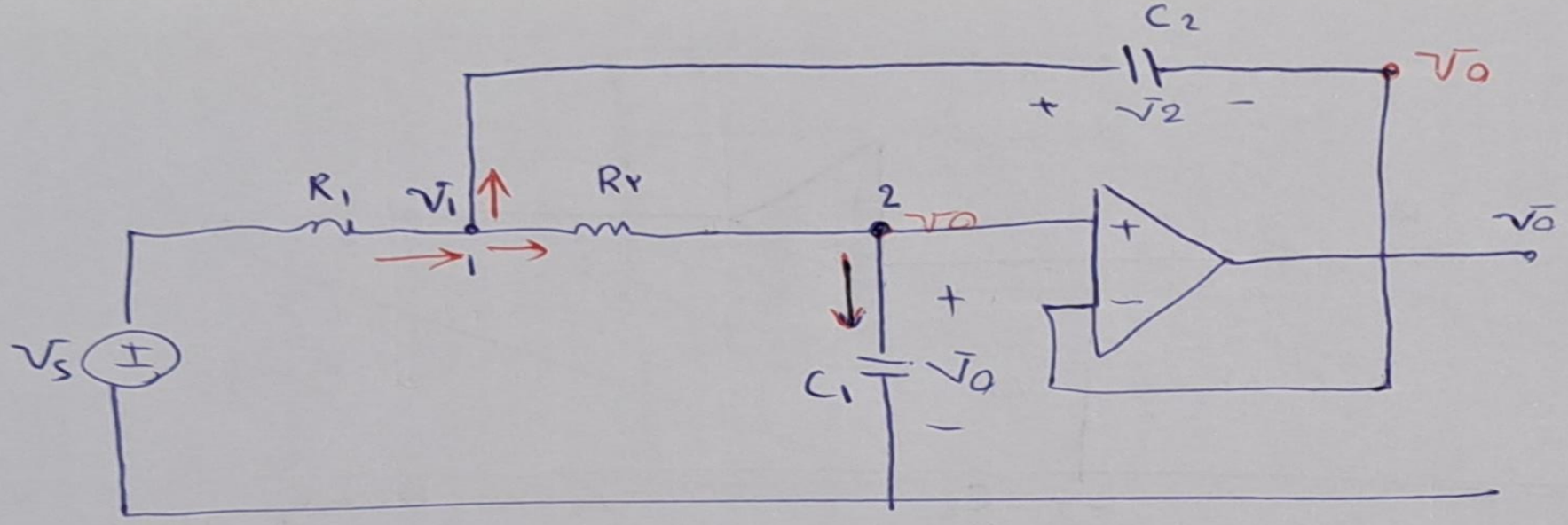

$$\text{KCL } V_1 : \begin{cases} \dfrac{V_s - V_1}{R_1} + \dfrac{V_1 - V_o}{R_2} + C_2 (V_1 - V_o)' = 0 \\[2ex] \dfrac{V_1 - V_o}{R_2} = C_1 V_o' \end{cases} \Rightarrow \boxed{V_1 = C_1 R_2 V_o' + V_o}$$

یک دستگاه معادله داریم می‌توان V_1 را حذف کرد و V_o را برحسب V_s نوشت.

↓ ادامه آن مشابه میان ترم (مدار مرتبه دوم) پس باید یاد بگیریم مدار مرتبه دوم را چگونه حل کنیم.

Class Exercise 8

- $v_s = \cos(t)mV,\ R_1 = R_2 = 10K\Omega,\ C_1 = 20\mu F,\ C_2 = 100\mu F$
- $v_o = ?$ (Use phasors).

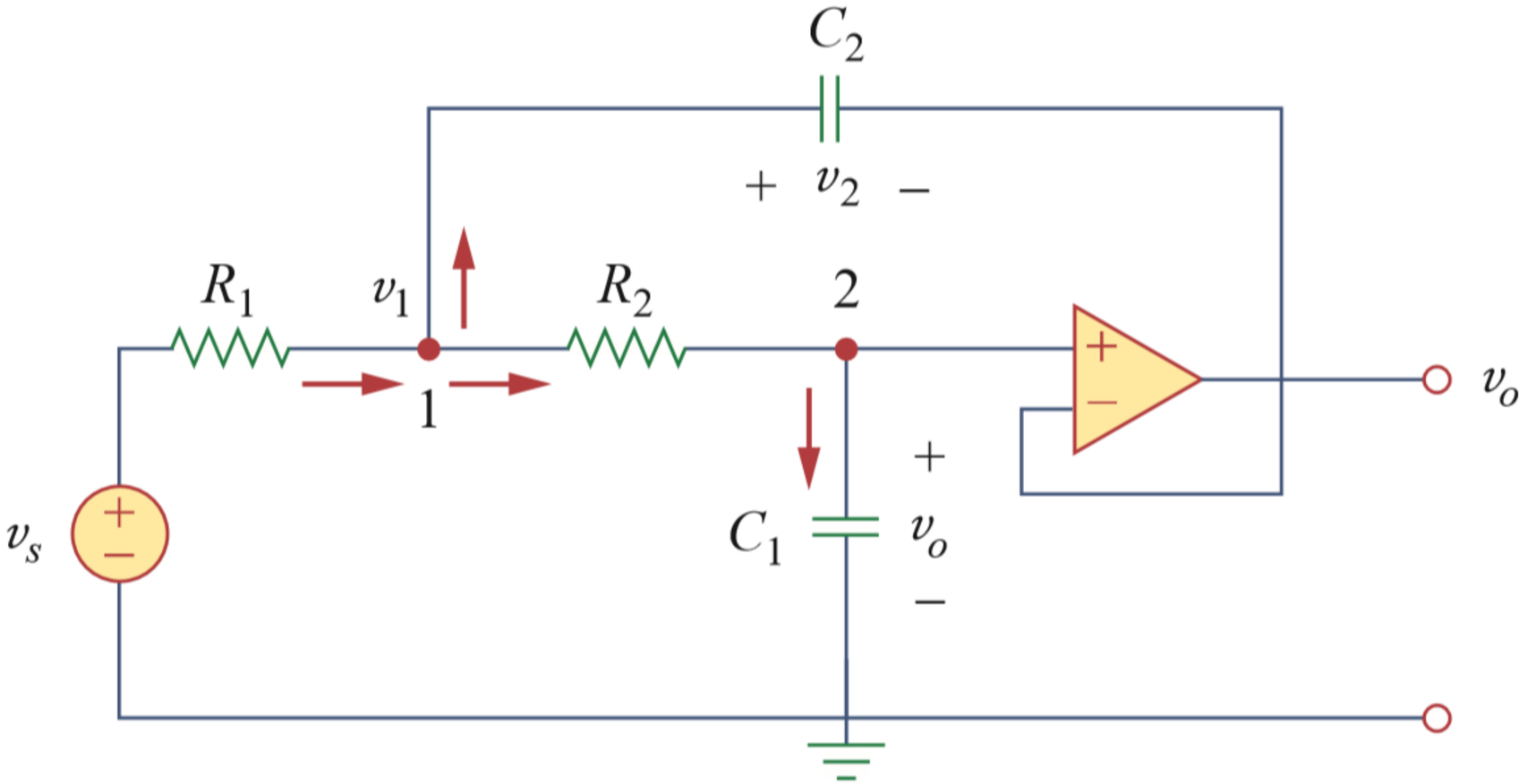

سؤال ۵

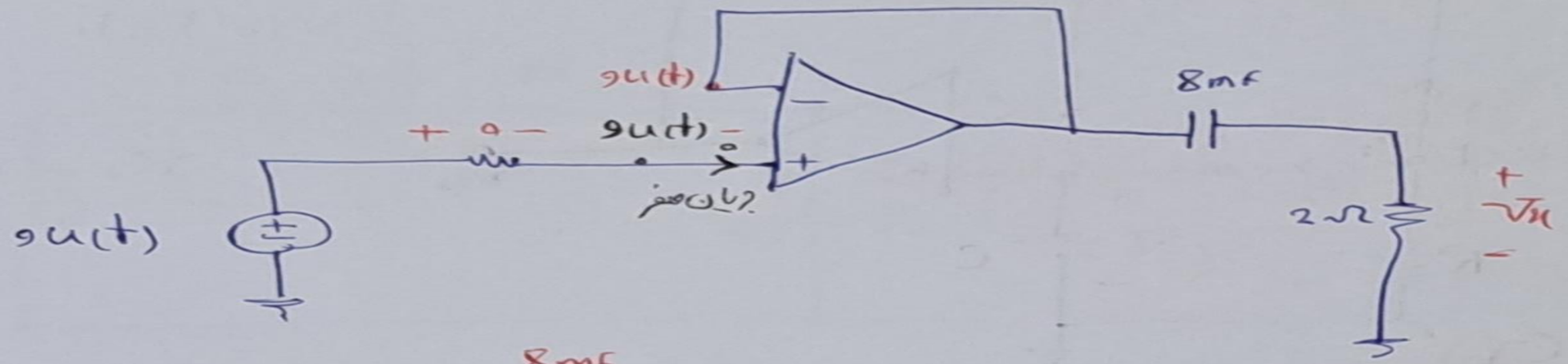

معادل باندار

≡

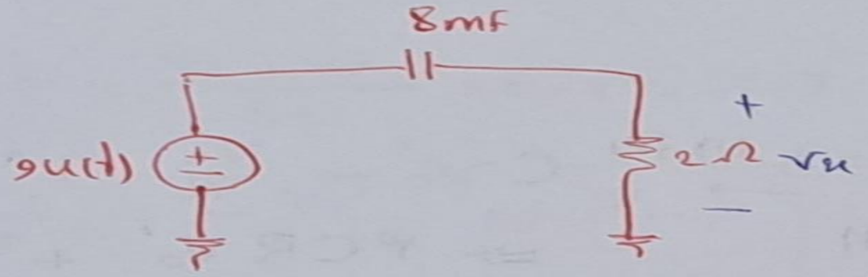

$$v_x = \cancel{V_\infty}^{\,0} + (\cancel{V_0}^{\,9} - \cancel{V_\infty}^{\,0})\, e^{-\frac{t}{16m}} = 9e^{-\frac{t}{16m}}$$

$$\begin{cases} V_\infty = 0 \\ V_x(0^+) = 9 \end{cases}$$

$\Rightarrow$ ولتاژ دو سر خازن مدار باز شده

در نتیجه $V_\infty = 0$

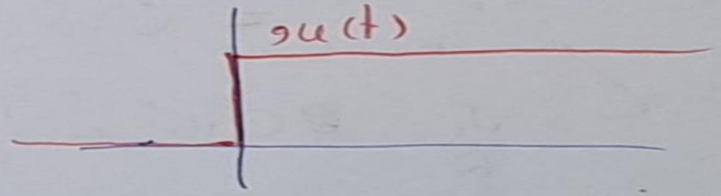

در لحظه صفر منفی در مدار سمت چپ $V(0^-) = 0$

و هر دو صفر هستند $V_C(0^-) = V_C(0^+)$

در نتیجه در لحظه صفر مثبت ۹ ولت روی دو سر مقاومت است

Class Exercise 9

If $v_{in} = \sin(200\pi t)$, plot the output voltage v_{out}.

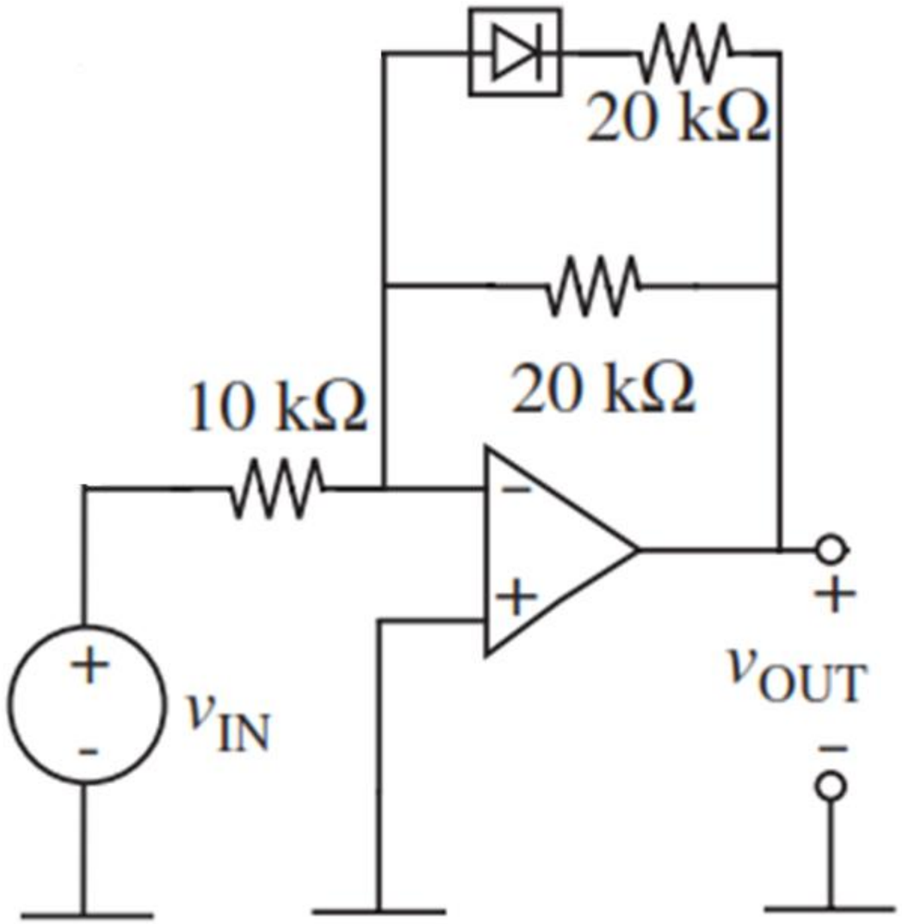

سؤال ۹ . مدل ایده‌آل

$V_{in} = \sin(200\pi t)$

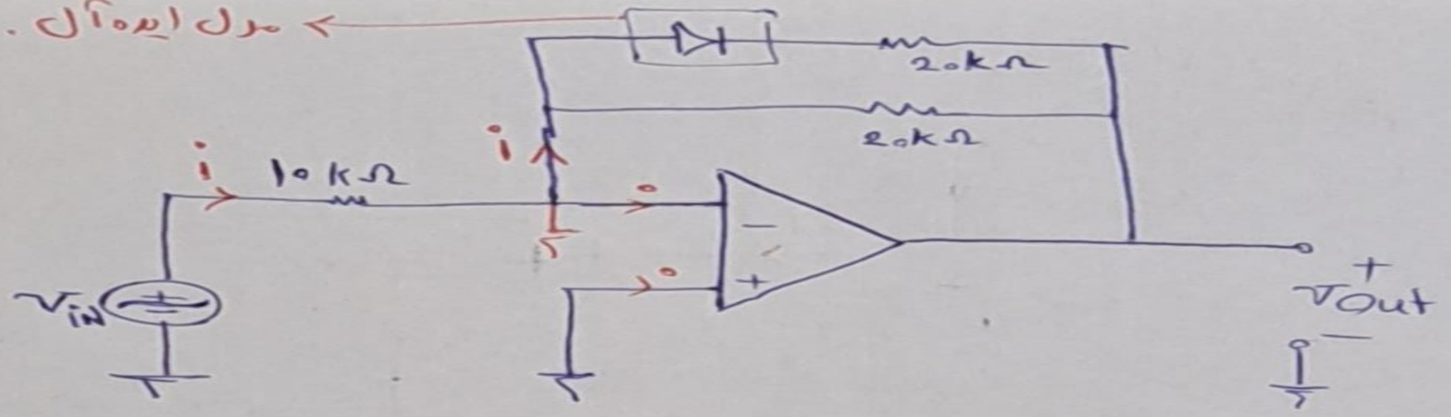

دیود ایده‌آل

$V<0$
$i=0$

$V=0$
$i>0$

با حالت فرض ← دیود { روشن / خاموش }

با استدلال می‌کنیم که اگر دیود بخواهد روشن باشد باید جریان آن مثبت باشد جریان آن هم

$i = \frac{V_{in}}{10k}$

پس هر جا که V_{in} مثبت باشد i مثبت خواهد بود در نتیجه

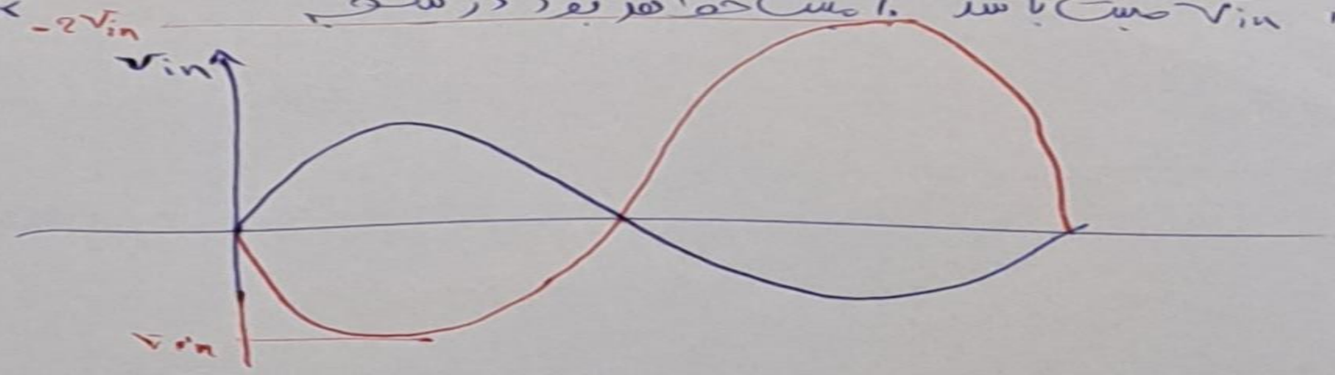

با دیود وصل ⇒ $20 \| 20$

$V_{out} = \frac{-10k}{10k} V_{in}$

با دیود قطع 20

$V_{out} = -2\, V_{in}$

Class Exercise 10

- Plot the diagram of v_{out} as a function of v_{in}.

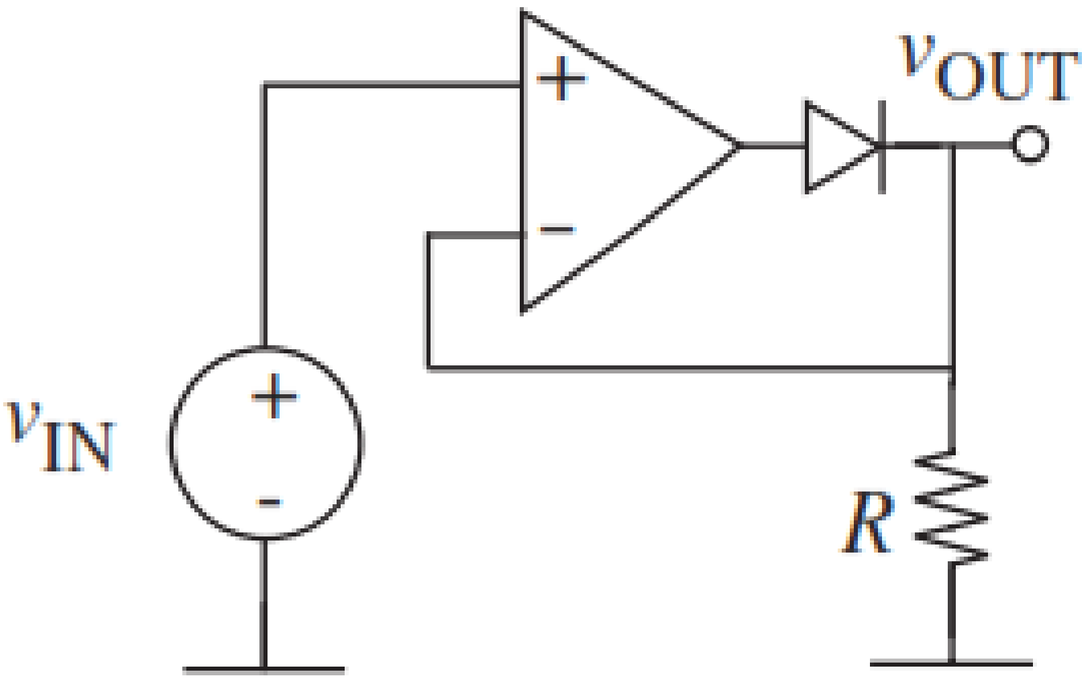

سؤال ۱۰

روشن یا خاموش بودن به این جریان وابسته شد که تا الان در مورد آن حرف نزده بودیم.

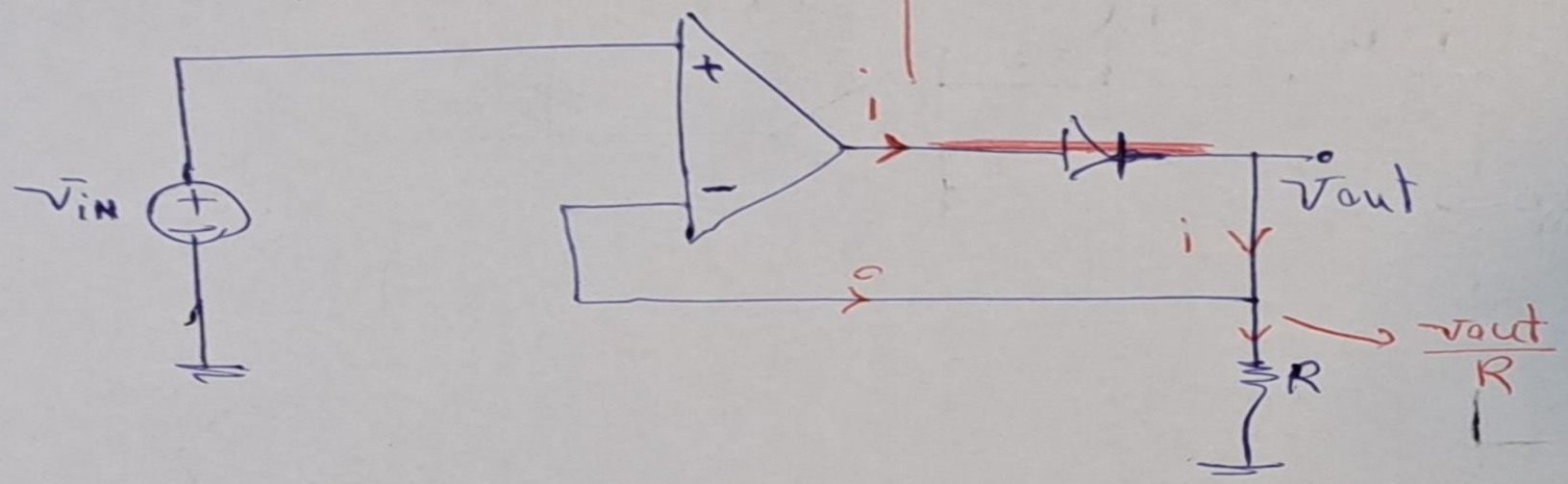

فرض کنیم D روشن باشد. در نتیجه $V_{out} = V_{in}$

$$i = \frac{V_{out}}{R} = \frac{V_{in}}{R}$$

V_{in} که همیشه مثبت نیست.

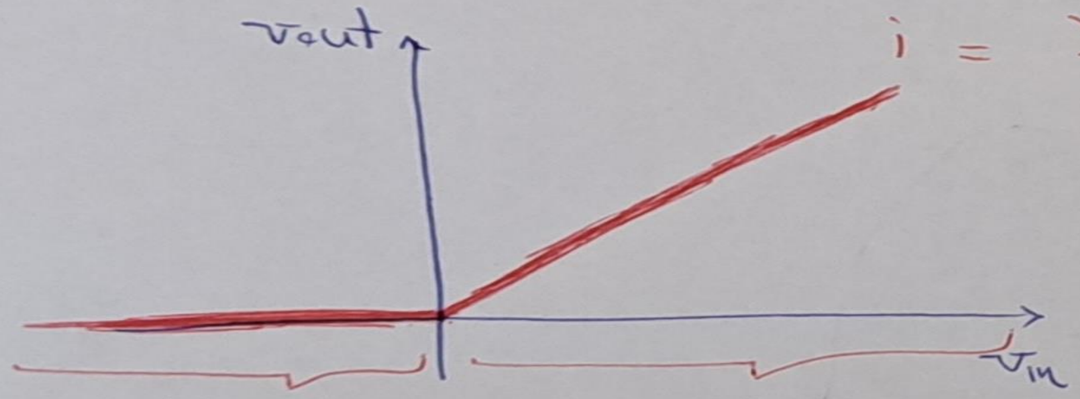

$i > 0$ شرط روشن بودن

در نتیجه برای $V_{in} > 0$، می‌توان $V_{out} = V_{in}$

Class Exercise 11

- Plot the diagram of v_{out} as a function of v_{in}.

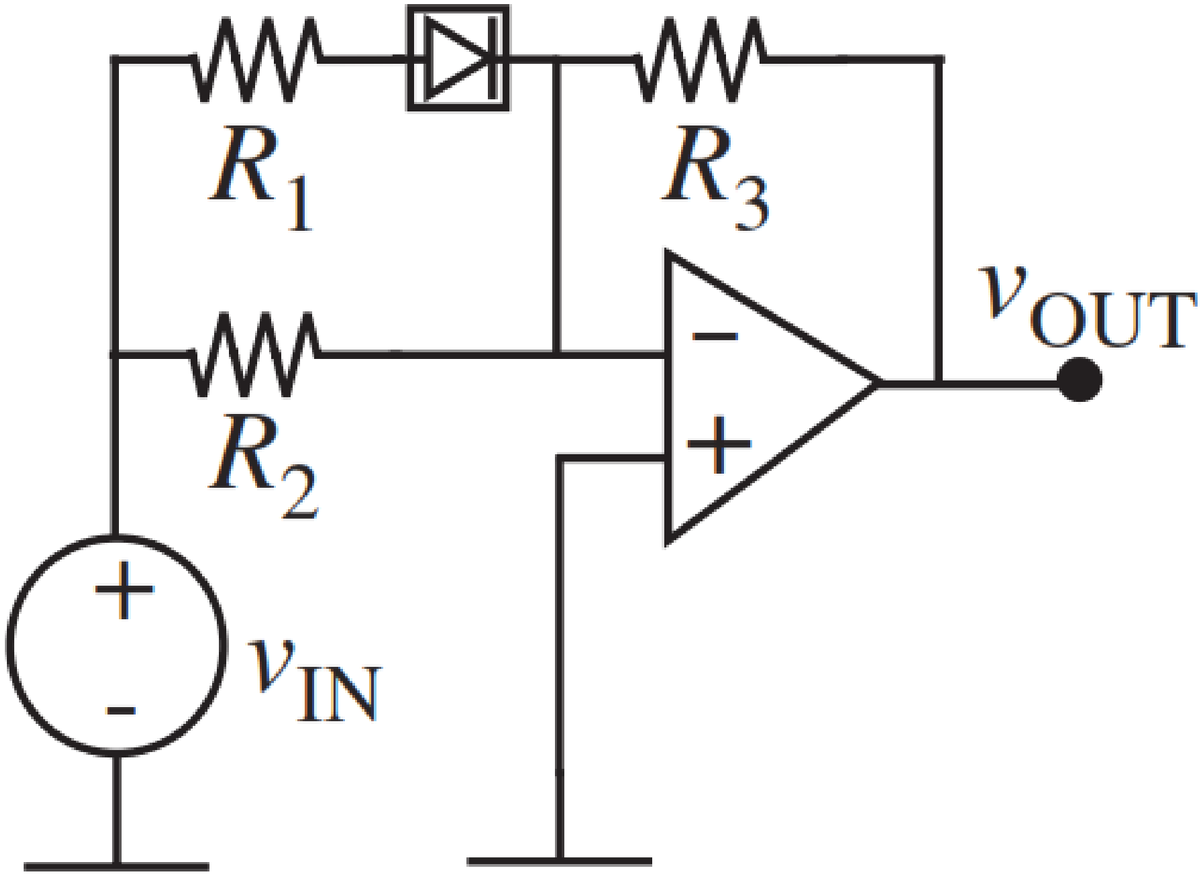

(۱۱)

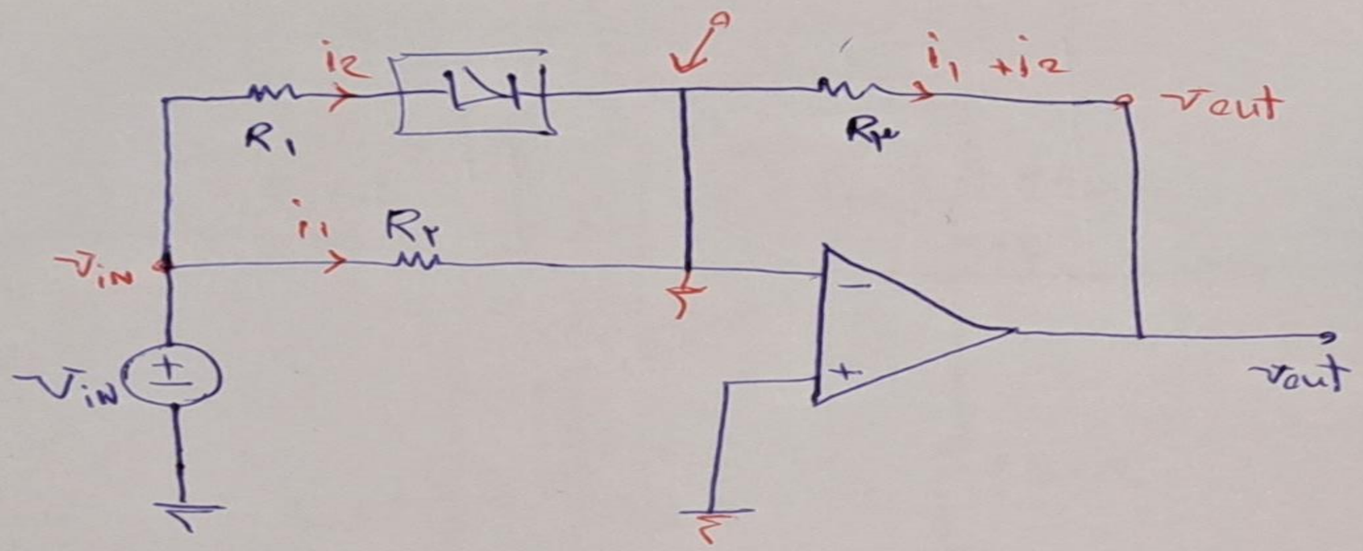

فرض کنیم D روشن باشد.

$$KCL: \frac{0 - v_{in}}{R_1 \| R_2} + \frac{0 - v_{out}}{R_3} = 0 \Rightarrow v_{out} = \frac{-R_3}{R_1 \| R_2} v_{in}$$

← تقویت کننده معکوس کننده

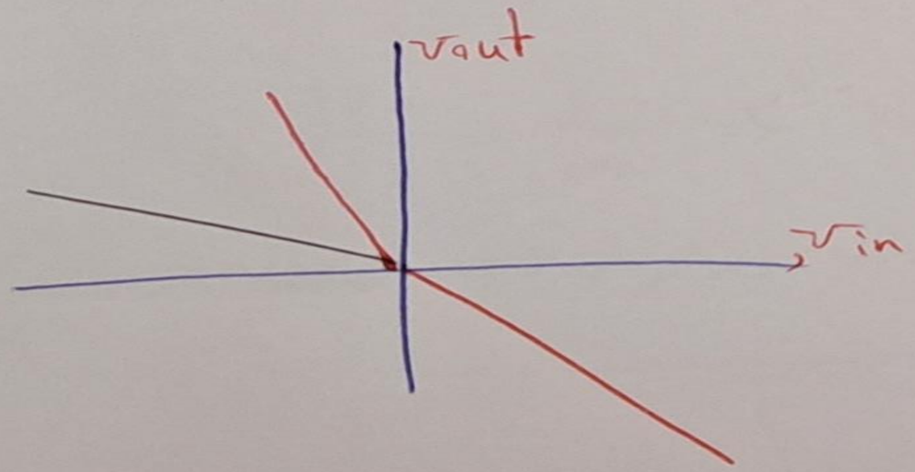

شرط روشن بودن $i_2 > 0$ ← $v_{in} > 0$

شرط خاموش $v_{in} < 0$ ←

$$v_{out} = \frac{-R_3}{R_2} v_{in}$$

Class Exercise

This is an active filter (using an op-amp in a frequency filter). Calculate:

- ✓ The type of filter
- ✓ The filter gain
- ✓ The cut-off frequency

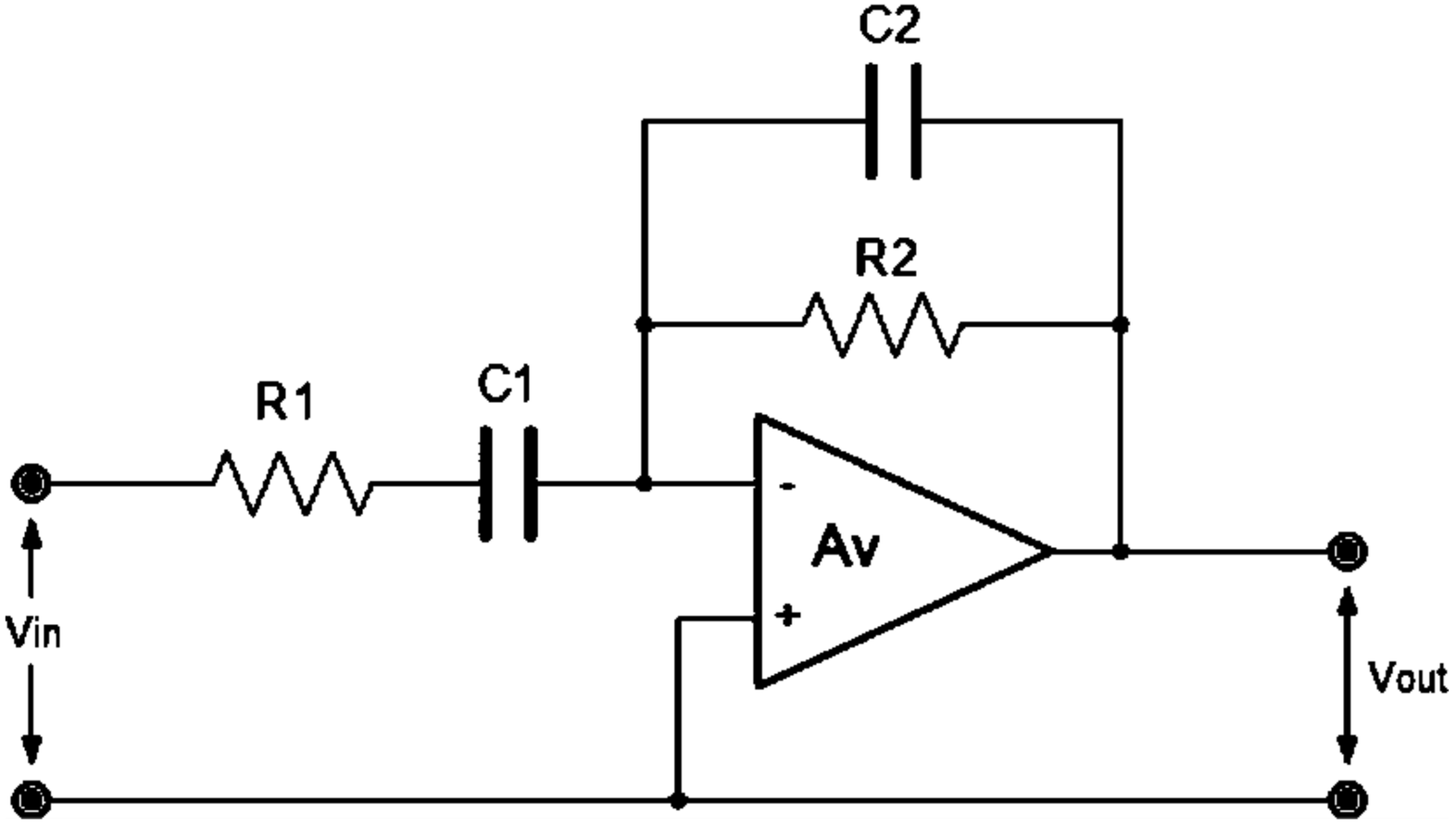

$R_0 \ (R_1 , \infty)$

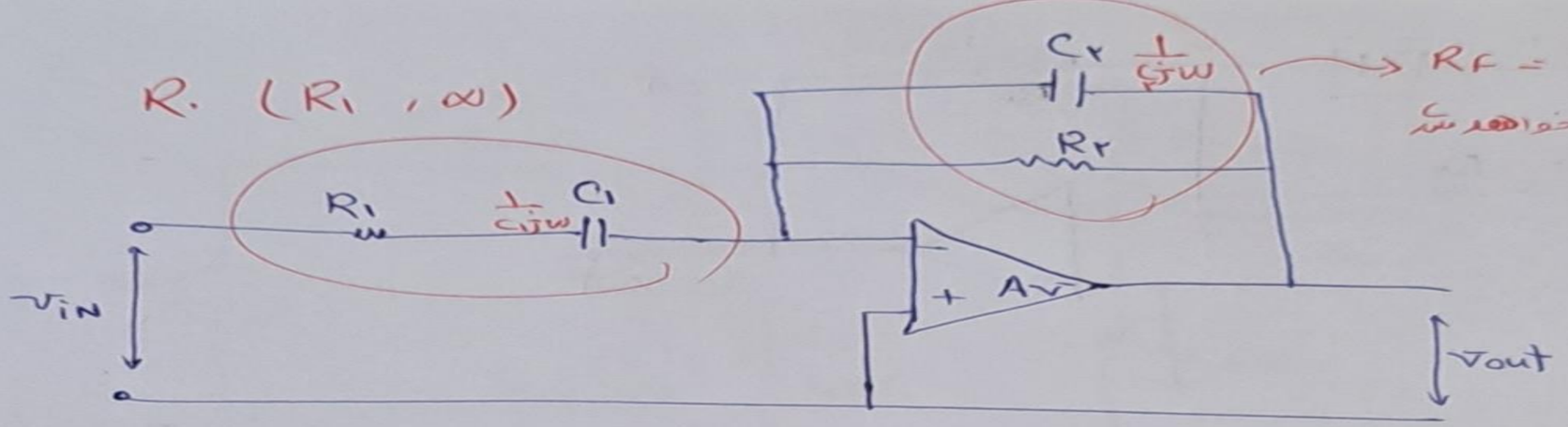

$R_F = (0 , R_2)$

$\omega \to \infty$ اتصال کوتاه و $R_F = 0$ خواهد شد

$$v_{out} = \frac{-R_F}{R_1} v_{in}$$

یک تقویت کننده معکوس کننده است.

مثل یک مقاومت متغیر با فرکانس.

که R_F و R در فرکانس های مختلف تغییر می کند.

$$\boxed{v_{out} = \frac{-R_F}{R_1} v_{in}}$$

فرکانس در بی نهایت

$R_F = \infty$

$R = R_1$

$$\Rightarrow A = \frac{0}{R_1} = 0$$

در فرکانس پایین

$$\Rightarrow A = \frac{R_2}{\infty} = 0$$

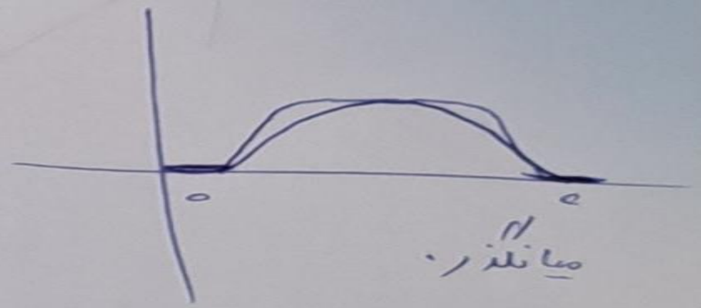

ادامه آن مثل قبل خواهد شد A را داریم در واقع تابع انتقال را داریم

$\frac{1}{\sqrt{2}}$

بگذاریم و فرکانس قطع را حساب می کنیم.

Thanks