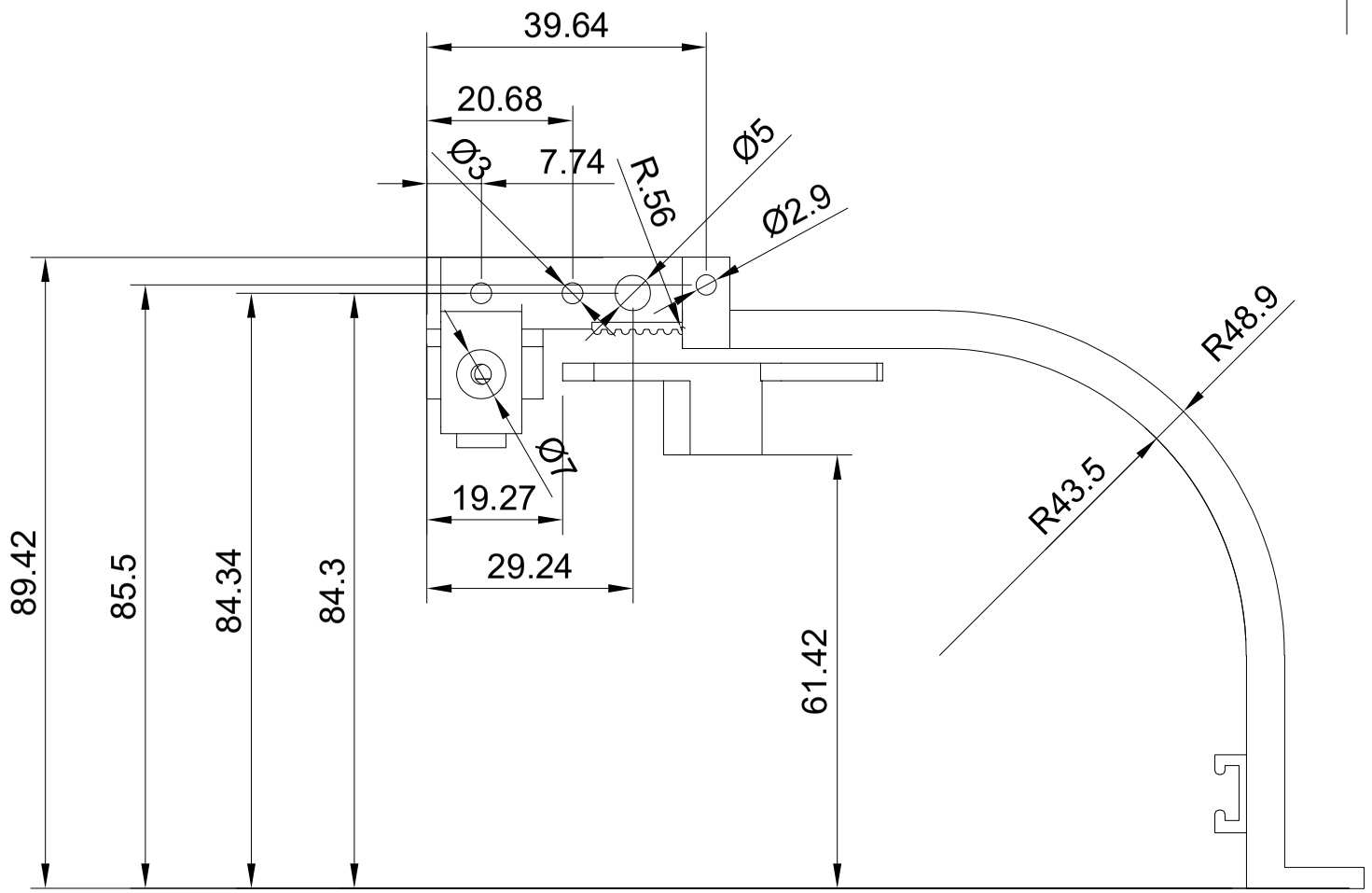

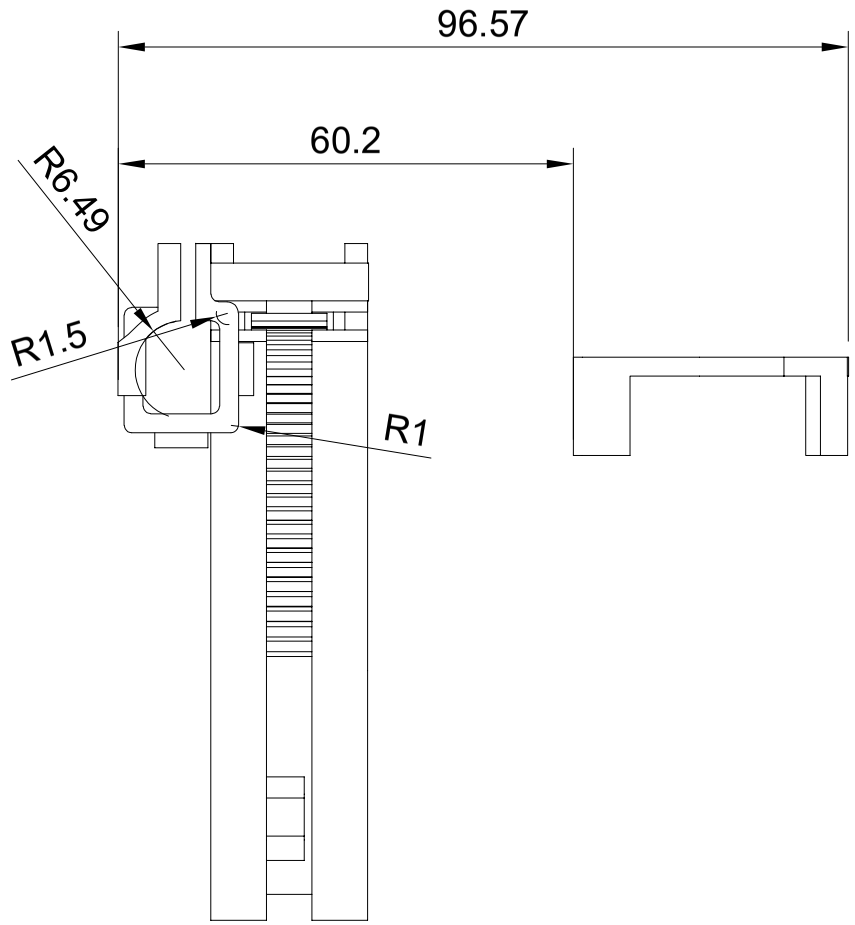

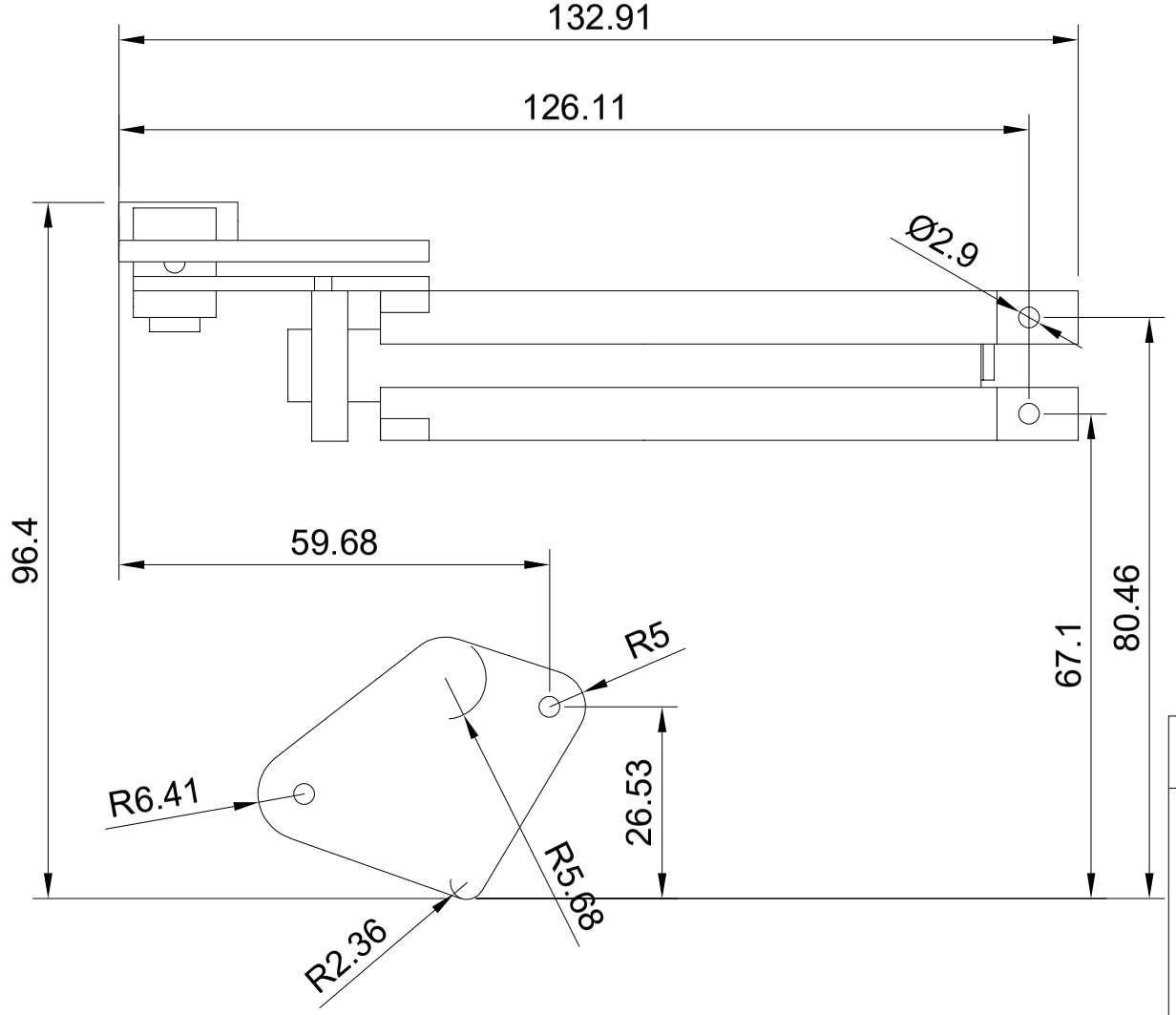

Dept.	Technical reference	Created by	Approved by
UNLZ	Proyecto M.	diego ibanez	
		Document type	Document status
		Title Guia camara y N20 soporte servo	DWG No.
			Rev. / Date of issue / Sheet 1/1