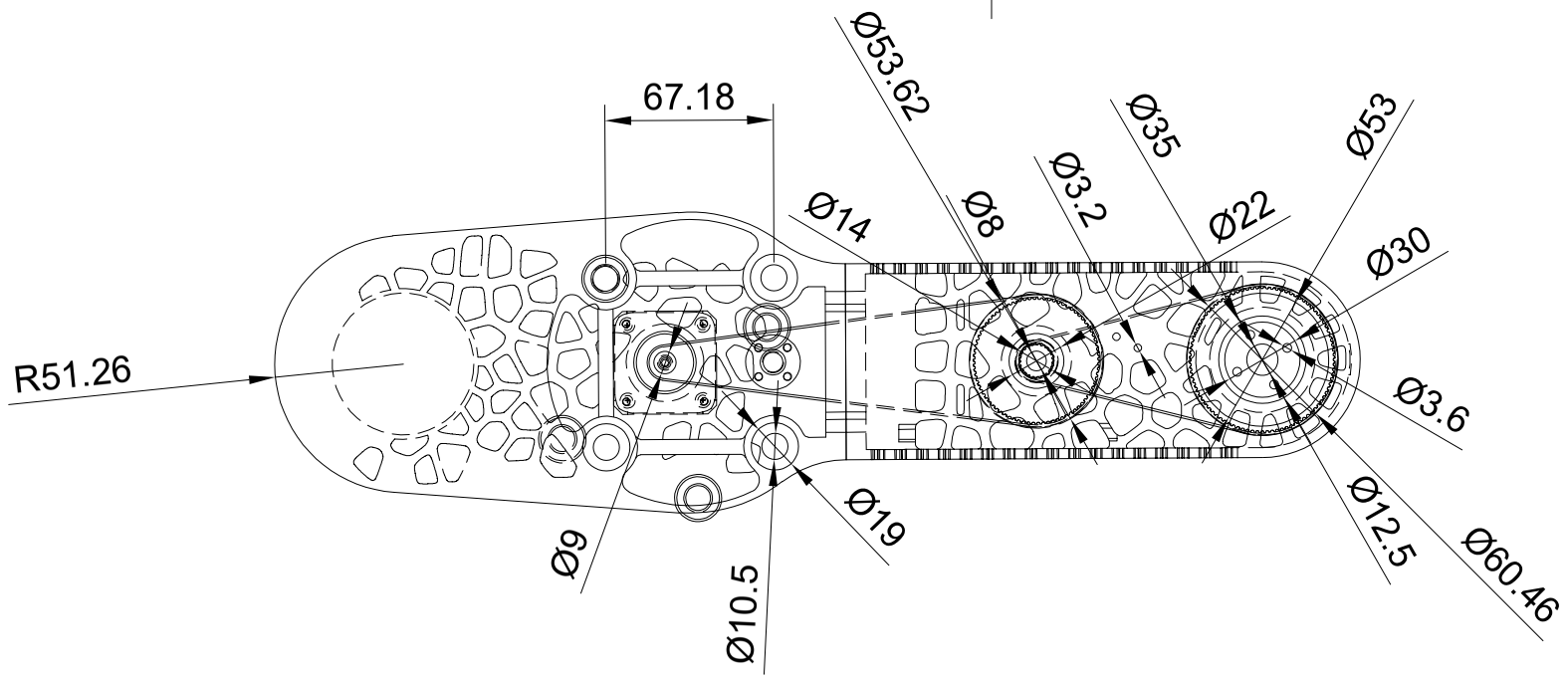

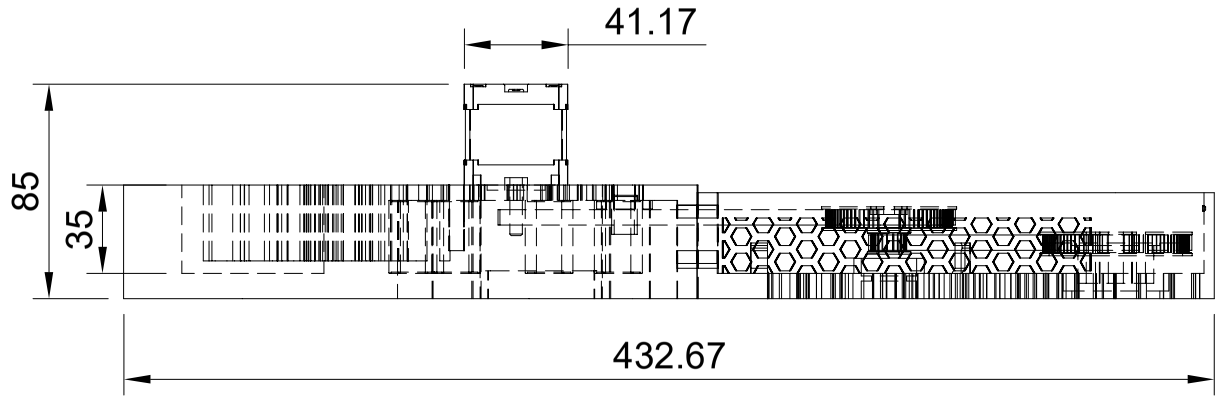

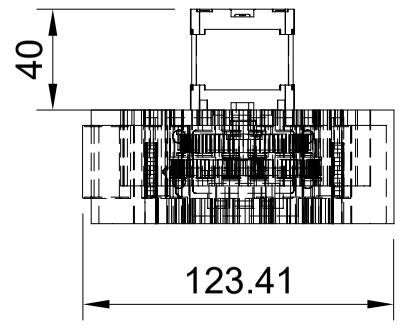

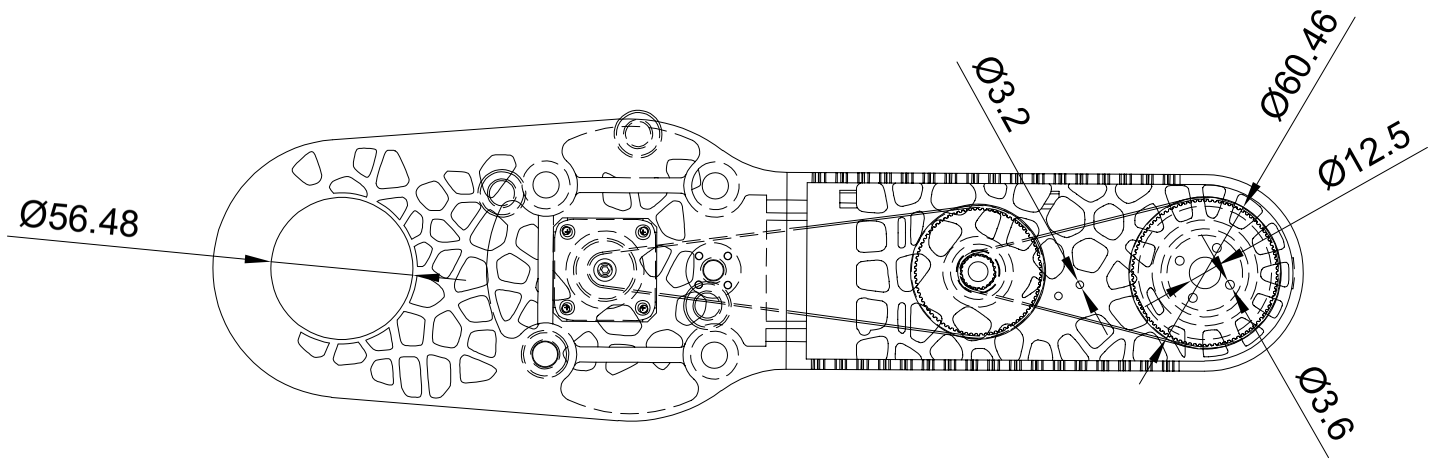

Dept.	Technical reference	Created by	Approved by
UNLZ	Proyecto M.	diego ibanez 2/8/2025	
		Document type: Plano mecanico	Document status
		Title: brazo 1	DWG No.
			Rev. / Date of issue / Sheet 1/1