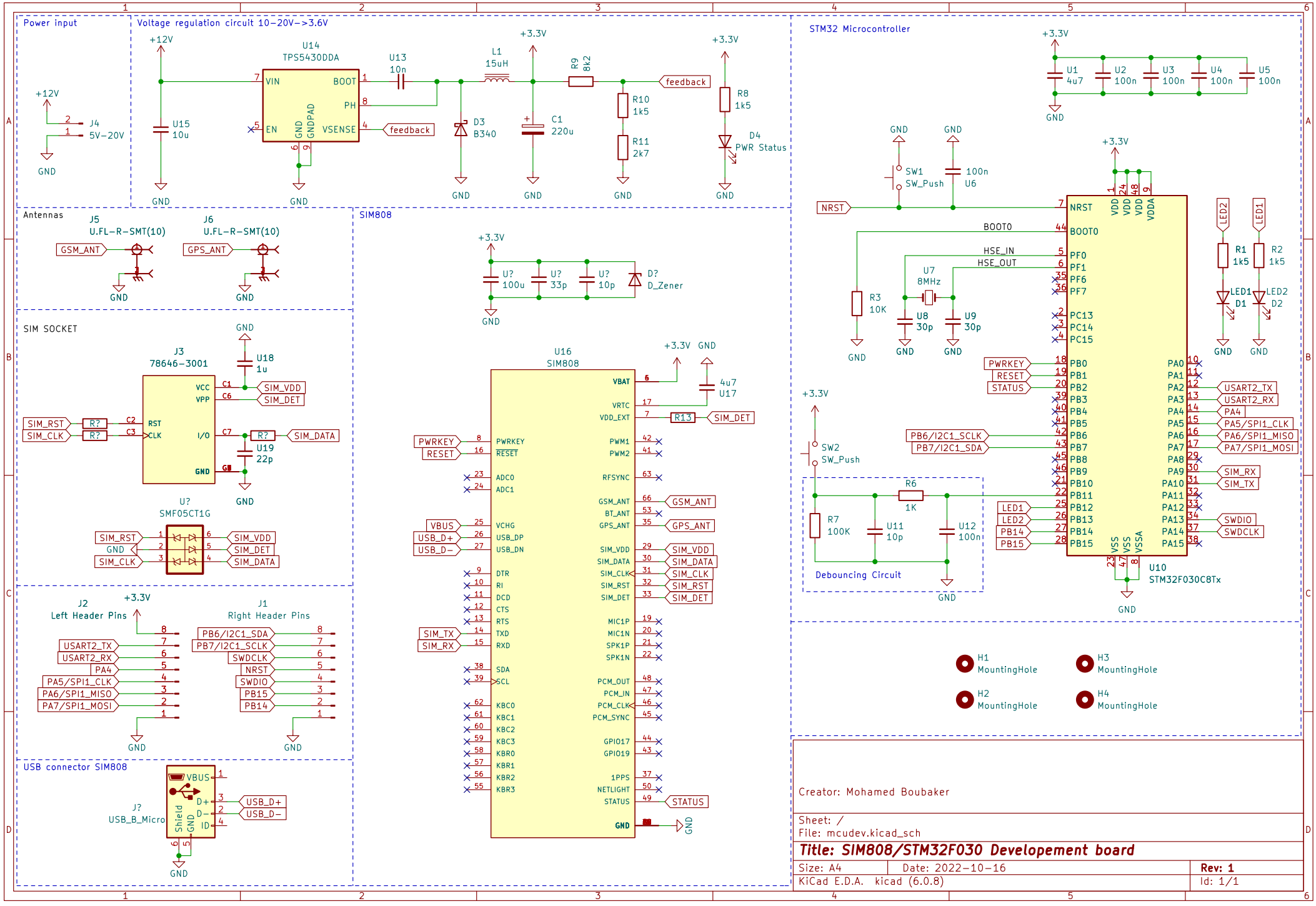

Creator: Mohamed Boubaker

Sheet: /
File: mcudev.kicad_sch

Title: SIM808/STM32F030 Developement board

Size: A4	Date: 2022-10-16	Rev: 1
KiCad E.D.A. kicad (6.0.8)		Id: 1/1