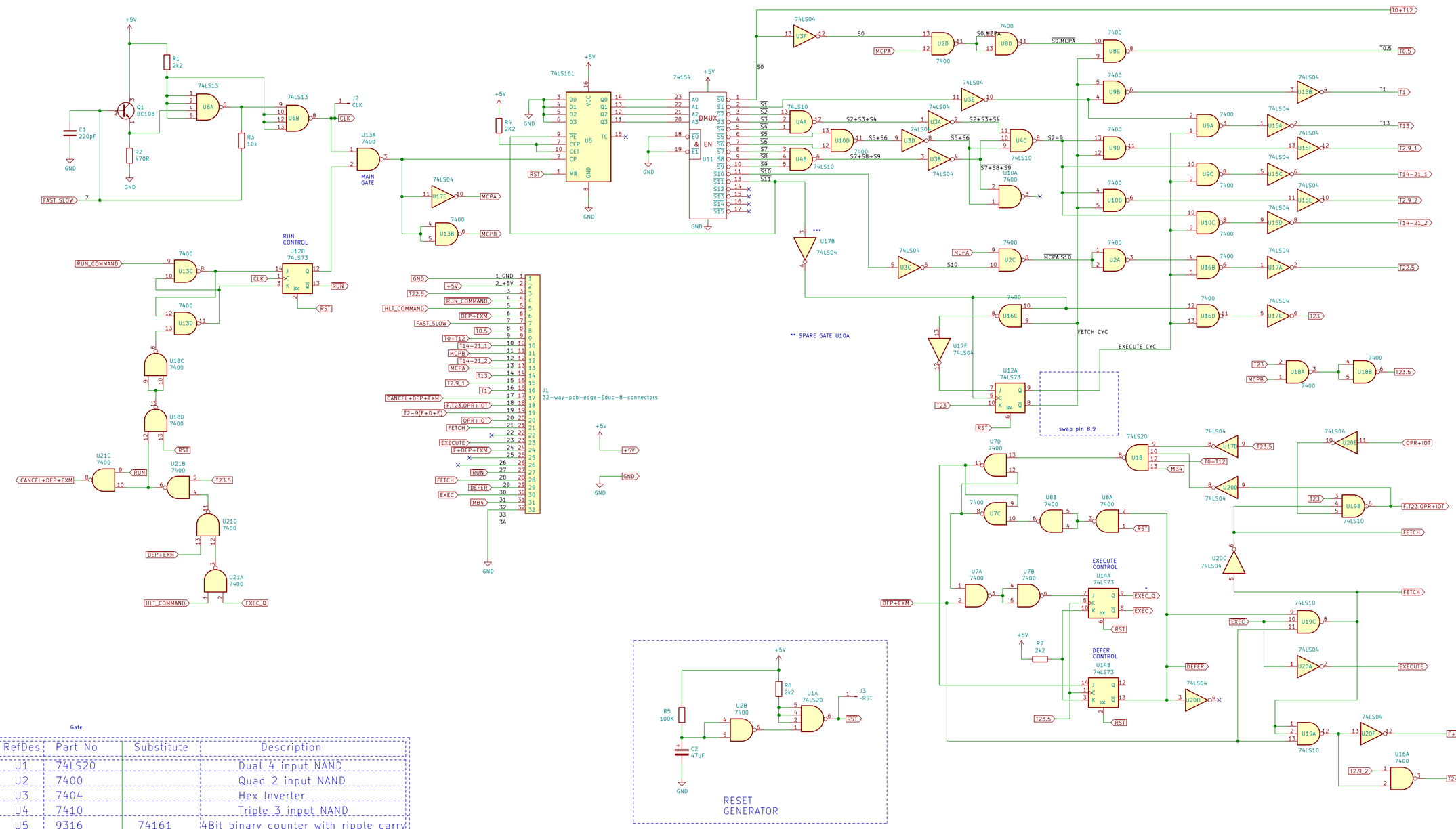

Gate

RefDes	Part No	Substitute	Description
U1	74LS20		Dual 4 input NAND
U2	7400		Quad 2 input NAND
U3	7404		Hex Inverter
U4	7410		Triple 3 input NAND
U5	9316	74161	4Bit binary counter with ripple carry
U6	7413		Dual 4 input NAND, open collector
U7	7400		"
U8	7400		"
U9	7400		"
U10	7400		"
U11	9311	74154	1 of 16 binary decoder
U12	7473		Dual J/K flip flow with clear
U13	7400		"
U14	7473		"
U15	7404		
U16	7400		
U17	7404		
U18	7400		
U19	7410		
U20	7404		
U21	7400		
Q1	BC548	BC108	NPN signal transistor

Sheet: /
File: educ 8 timing .kicad_sch

Title: EDUC-8 TIMING

Size: A2	Date: 2019-07-20	Rev: 1
KiCad E.D.A. kicad (6.0.4-0)		Id: 1/1