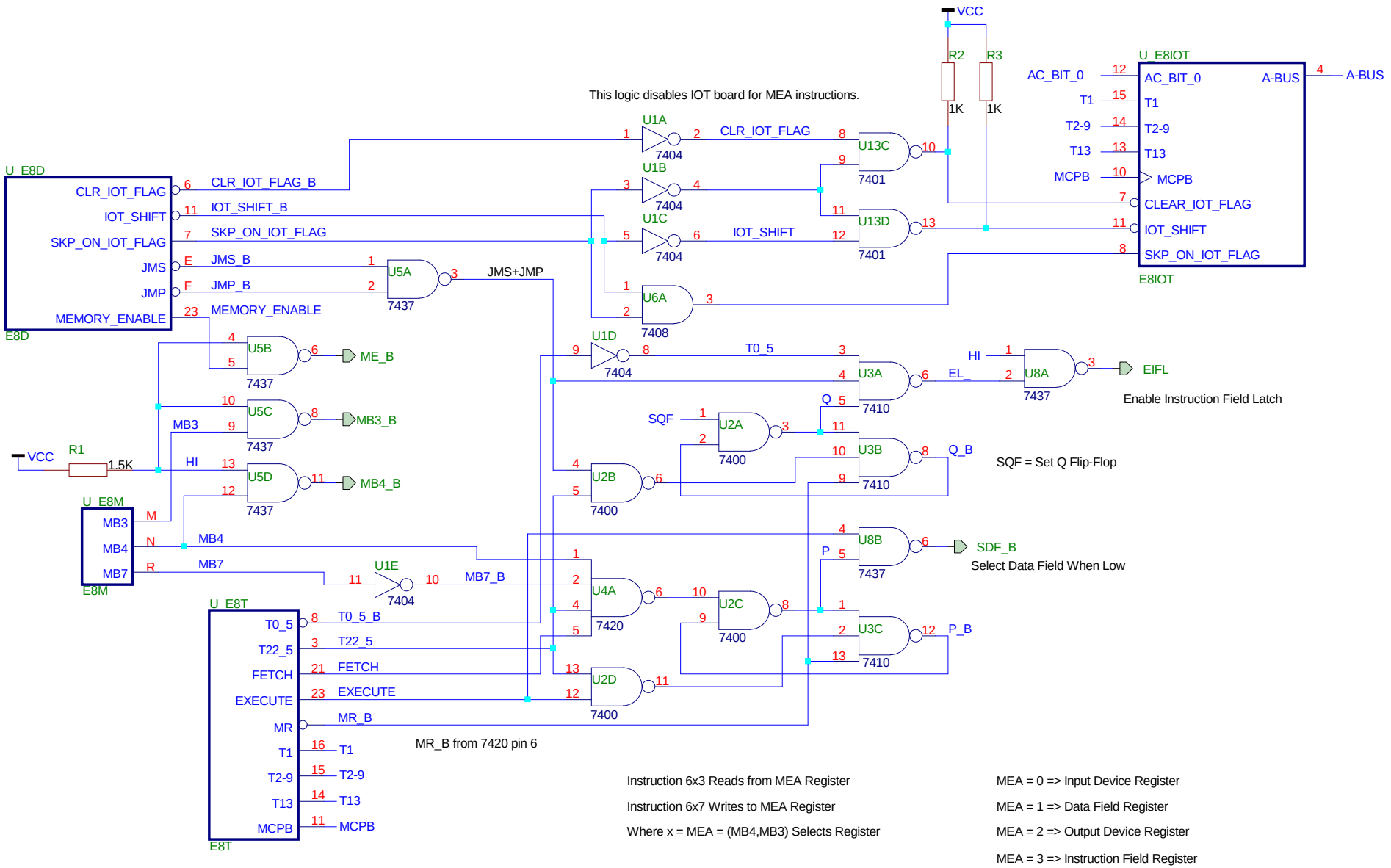

Small World Communications	Project: EDUC8ME
6 First Avenue	Macro: BUFFER1
Payneham South SA 5070	Date: 1/22/22
Date Last Modified: 2/20/22	