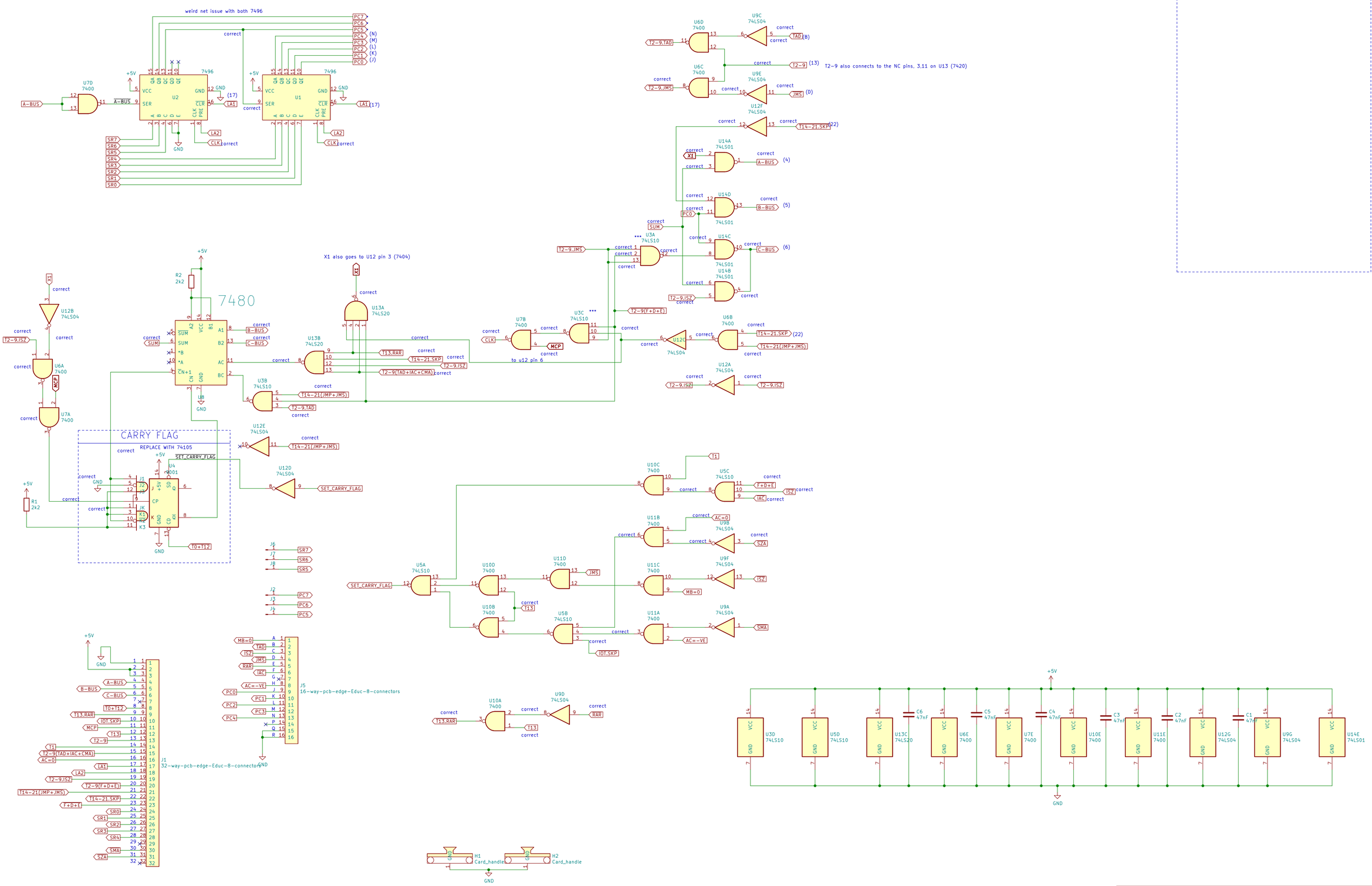

PROGRAM COUNTER AND ADDER

Drawn by Gwyllym Suter
Designed by Jamieson Rowe
Electronics Australia

Sheet: /
File: program counter and adder logic.kicad_sch

Title: Program counter and adder

Size: A2	Date: 2021-07-14	**Rev: 1**
KiCad E.D.A. kicad (6.0.4-0)		Id: 1/1