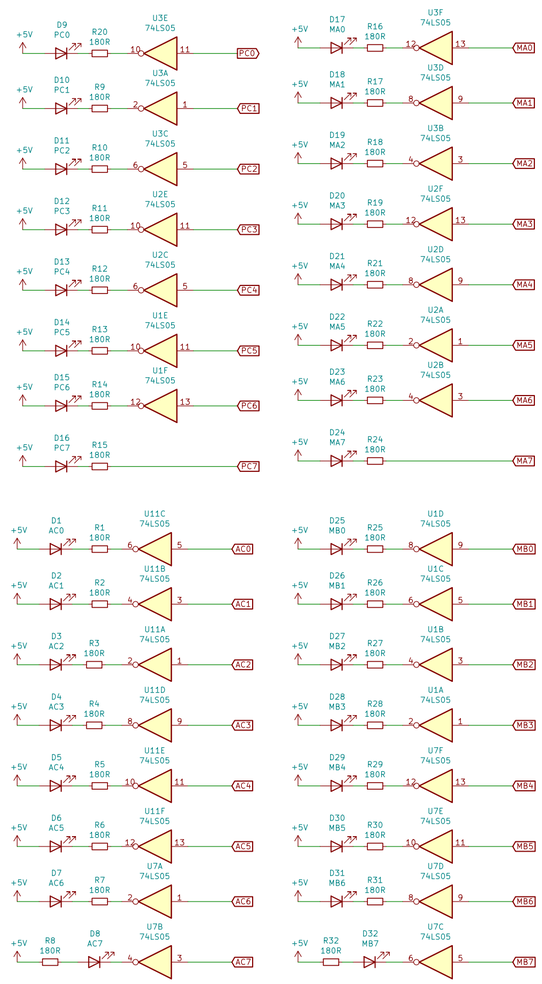

1.PC7 and MA7 buffers are located on E8–M

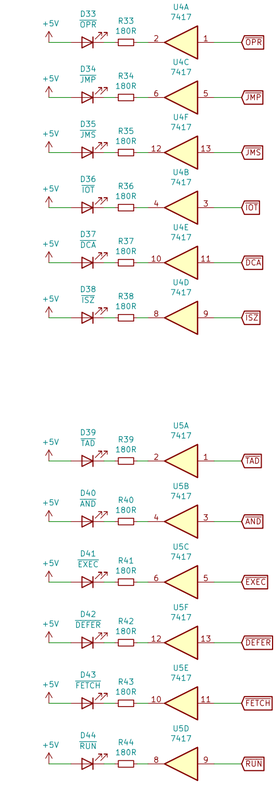

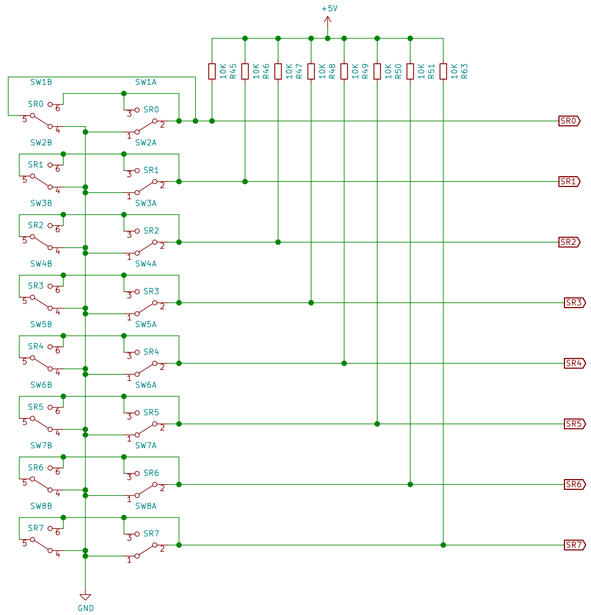

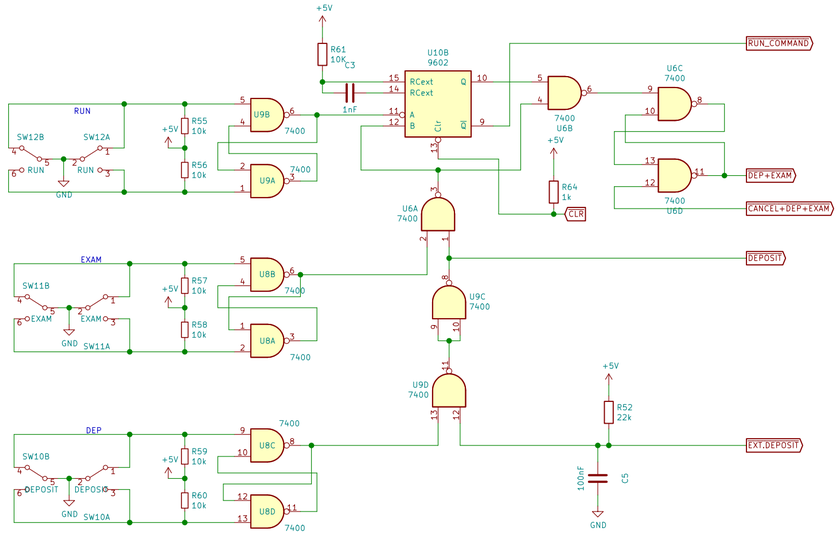

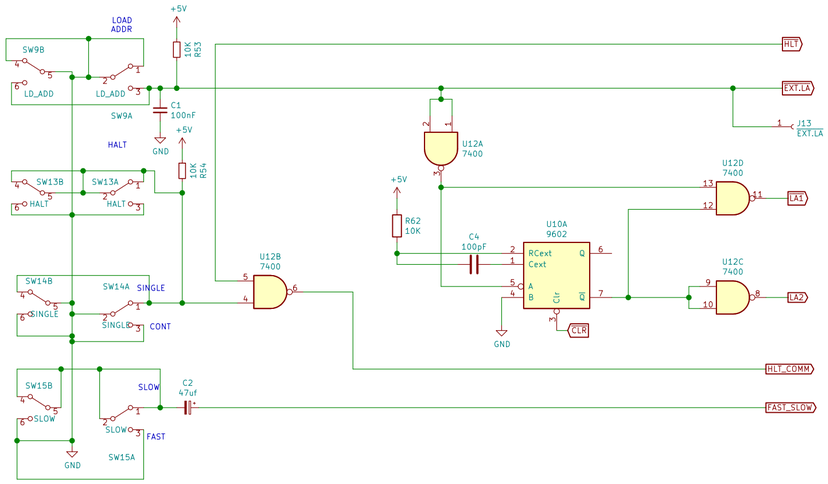

RefDes	PART No	Description
U1	7405	Hex inverter OC
U2	7405	
U3	7405	
U4	7417	Hex buffer OC
U5	7417	
U6	7400	Quad NAND
U7	7405	
U8	9362	Dual one shot
U9	7405	
U10	7400	
U11	7400	
U12	7400	

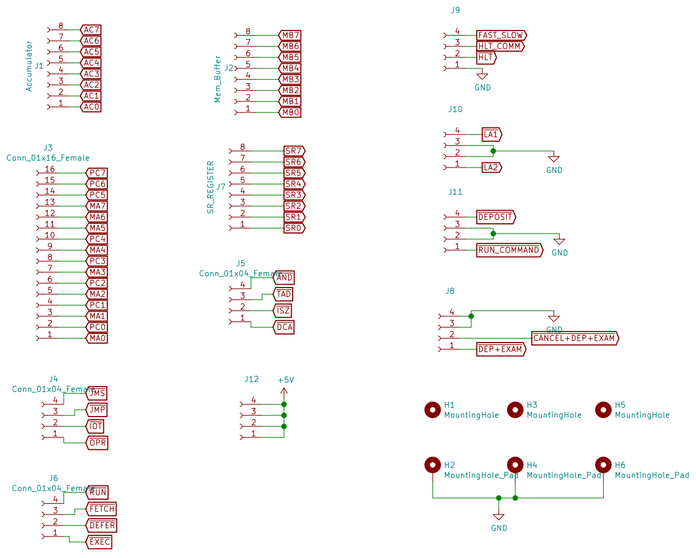

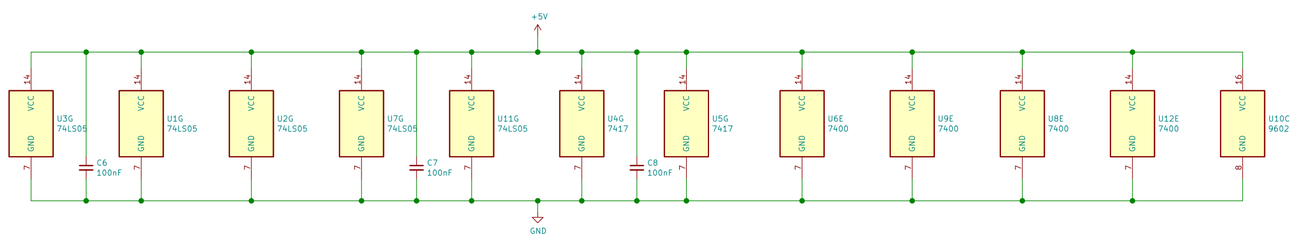

FRONT PANEL

Drawn by Gwyllym Suter
Designed by Jamieson Rowe
ELECTRONICS AUSTRALIA
Sheet: /
File: front panel.sch

Title: EDUC–8 FRONT PANEL

Size: A2	Date: 2021–07–14	**Rev: 1.0**
KiCad E.D.A. kicad (5.1.10–1–10_14)		Id: 1/1