AMCS506: Boundary layer equations

Lecture 3

Md. Mamun Molla

Email: mamun.molla@northsouth.edu

Room: SAC1039

Boundary layer flow

In fluid dynamics, the boundary layer is a thin region adjacent to a solid surface where the effects of viscosity are significant. In laminar flow, the fluid moves in parallel layers with minimal mixing between them. The study of laminar 2D convective boundary layer flow is essential for applications in engineering and environmental science, where understanding heat and mass transfer is critical.

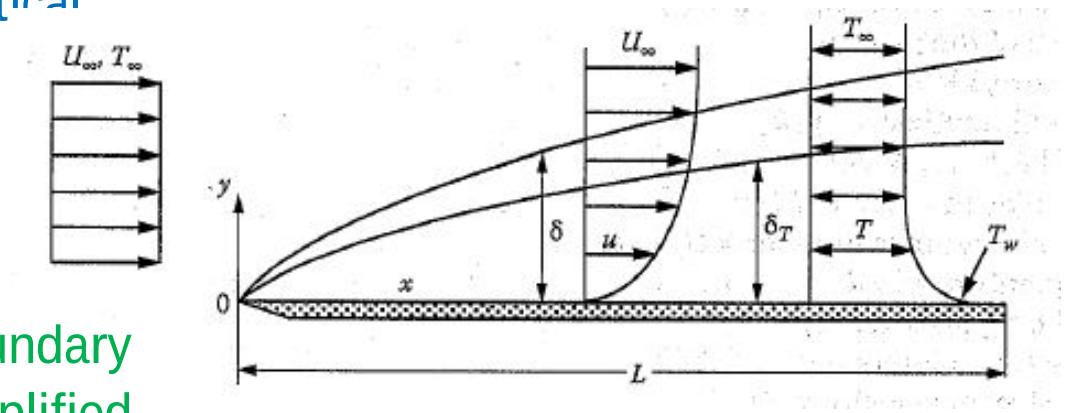

The behavior of laminar 2D convective boundary layer flow can be described by the simplified Navier-Stokes and energy equations, which govern the motion of fluid substances.

Laminar flow boundary layer equations was discovered by Ludwig Prandtl (1875-4953):

Laminar boundary layer equations:

(a) Laminar flow (b) transitional flow, and (b) turbulent flow

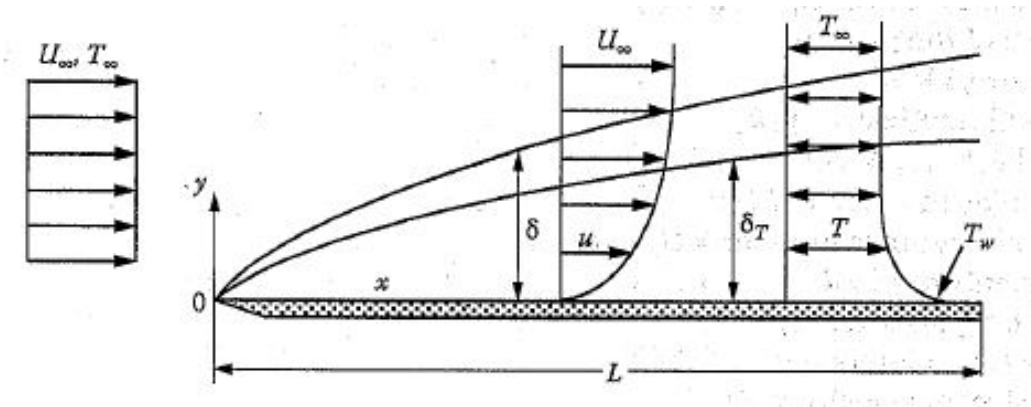

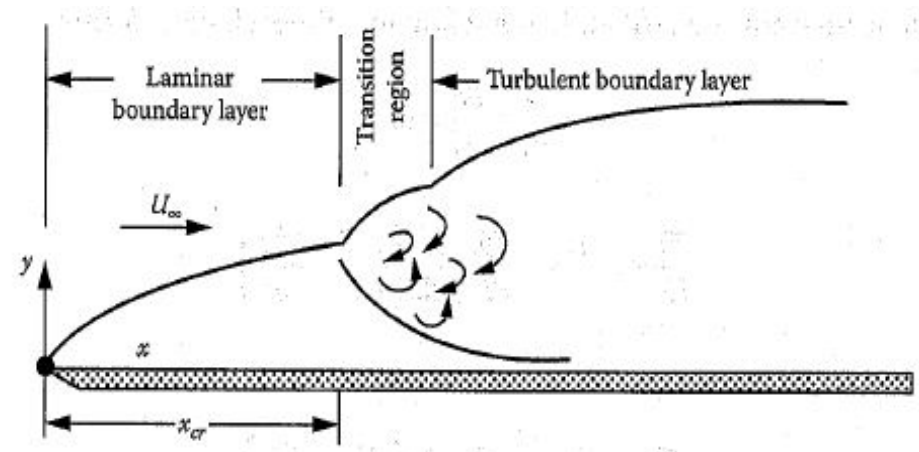

(a) Laminar boundary layer (b) laminar, transitional and turbulent boundary layer flow

Laminar flow boundary layer equations:

$$\frac{\partial u}{\partial x}+\frac{\partial v}{\partial y}=0,$$

$$u\frac{\partial u}{\partial x}+v\frac{\partial u}{\partial y}=-\frac{1}{\rho}\frac{dp}{dx}+v\left(\frac{\partial^2 u}{\partial y^2}\right),$$

$$u\frac{\partial T}{\partial x}+v\frac{\partial T}{\partial y}=\frac{k}{\rho c_p}\frac{\partial^2 T}{\partial y^2}.$$

For the boundary layer flow: The viscous term w.r.t. x derivative term is negligible to low contribution which was found by the order of magnitude analysis. (Book: Convective Heat Transfer, p 63-64)

Example: Natural Convection of boundary layer flow along a vertical plate with streamwise surface temperature

Dimensional governing equations (2D)

$$\frac{\partial \bar{u}}{\partial \bar{x}} + \frac{\partial \bar{v}}{\partial \bar{y}} = 0$$

$$\bar{u}\frac{\partial \bar{u}}{\partial \bar{x}} + \bar{v}\frac{\partial \bar{u}}{\partial \bar{y}} = \frac{\partial^2 \bar{u}}{\partial \bar{y}^2} + g\beta(T - T_\infty)$$

$$\frac{\partial T}{\partial \bar{x}} + \bar{v}\frac{\partial T}{\partial \bar{y}} = \frac{k}{\rho C_p}\frac{\partial^2 T}{\partial \bar{y}^2}$$

Boundary conditions

$$\bar{u} = \bar{v} = 0, \quad T = T_\infty + (T_w - T_\infty)\left(1 + A\sin\left(\pi\frac{\bar{x}}{l}\right)\right) \quad \text{at} \quad \bar{y} = 0$$

$$\bar{u} \to 0, \bar{v} \to 0, \quad T \to T_\infty \quad \text{as} \quad \bar{y} \to \infty$$

Non-dimensional variables:

$$x = \frac{\bar{x}}{l}, y = Gr^{\frac{1}{4}}\frac{\bar{y}}{l}, u = \frac{l}{\nu}Gr^{-\frac{1}{2}}\bar{u}, v = \frac{l}{\nu}Gr^{-\frac{1}{4}}\bar{v},$$

$$\theta = \frac{T - T_\infty}{T_w - T_\infty}, Gr = \frac{g\beta(T_w - T_\infty)l^3}{\nu^2}$$

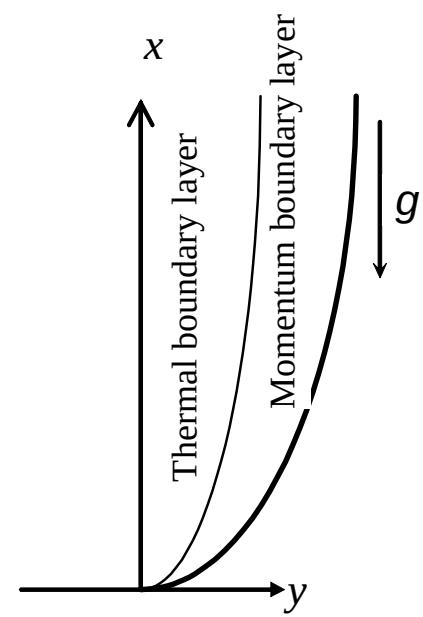

Example: Natural Convection of boundary layer flow along a vertical plate with streamwise surface temperature

Non-Dimensional governing equations (2D)

$$\frac{\partial u}{\partial x} + \frac{\partial v}{\partial y} = 0$$

$$u\frac{\partial u}{\partial x} + v\frac{\partial u}{\partial u} = \frac{\partial^2 u}{\partial y^2} + \theta$$

$$\frac{\partial \theta}{\partial x} + v\frac{\partial \theta}{\partial y} = \frac{1}{Pr}\frac{\partial^2 \theta}{\partial y^2}$$

Boundary conditions

$$u = v = 0, \quad \theta = (1 + \alpha \sin(\pi x)) \quad \text{at} \quad y = 0$$

$$u \to 0, v \to 0, \quad \theta \to 0 \quad \text{as} \quad y \to \infty$$

Parabolic transformation:

$$\psi = x^{\frac{3}{4}} f(x,\eta), \eta = x^{-\frac{1}{4}} y, \theta = \theta(x,\eta), u = \frac{\partial \psi}{\partial y}. \quad v = -\frac{\partial \psi}{\partial x}$$

Transformed equations:

$$f''' + \frac{3}{4} f f'' - \frac{1}{2} f'^2 + \theta = x\left(f'\frac{\partial f'}{\partial x} - f''\frac{\partial f}{\partial x}\right)$$

$$\frac{1}{Pr}\theta'' + \frac{3}{4} f\theta' = x\left(f'\frac{\partial \theta}{\partial x} - \theta\frac{\partial f}{\partial x}\right)$$

New boundary conditions

$$f = f' = 0, \quad \theta = (1 + \alpha \sin(\pi x)) \quad \text{at} \quad \eta = 0$$

$$f' \to 0, \quad \theta \to 0 \quad \text{as} \quad \eta \to \infty$$

Code validation

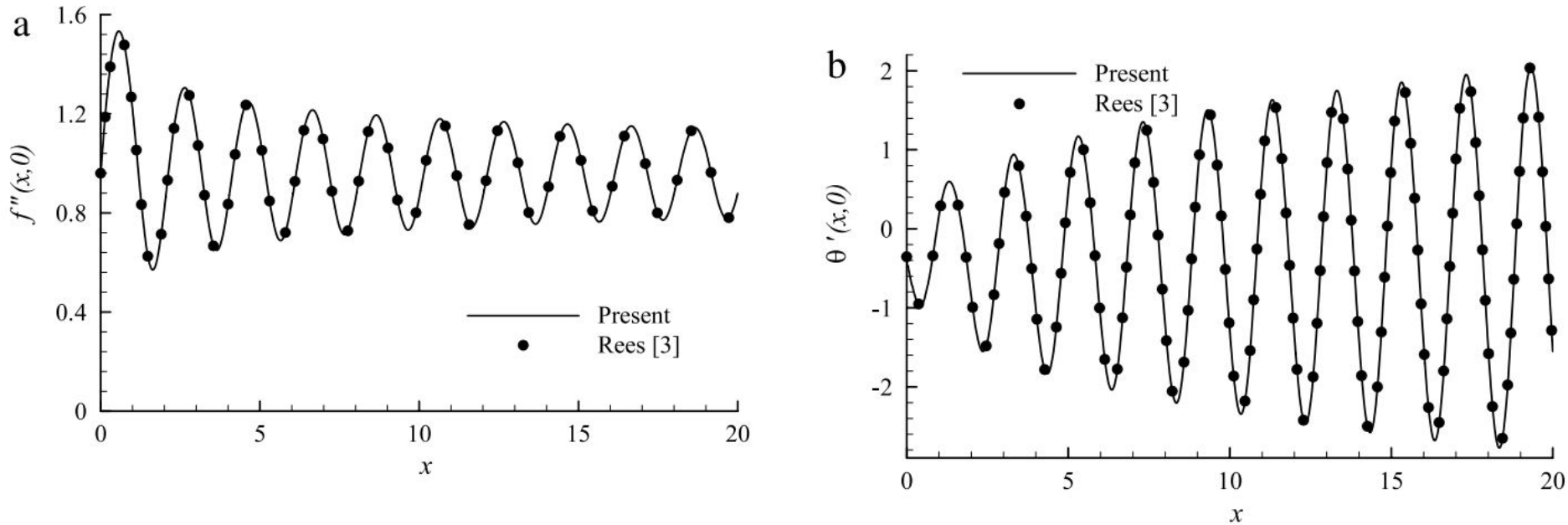

Figure: (a) Shear stress (b) Heat transfer while Pr =0.7 and α = 0.1

[3] D.A.S. Rees, The effect of steady streamwise surface temperature variations on vertical free convection, Int. J. Heat Mass Transfer 31 (1999) 1344–1353.

Results: Isotherms

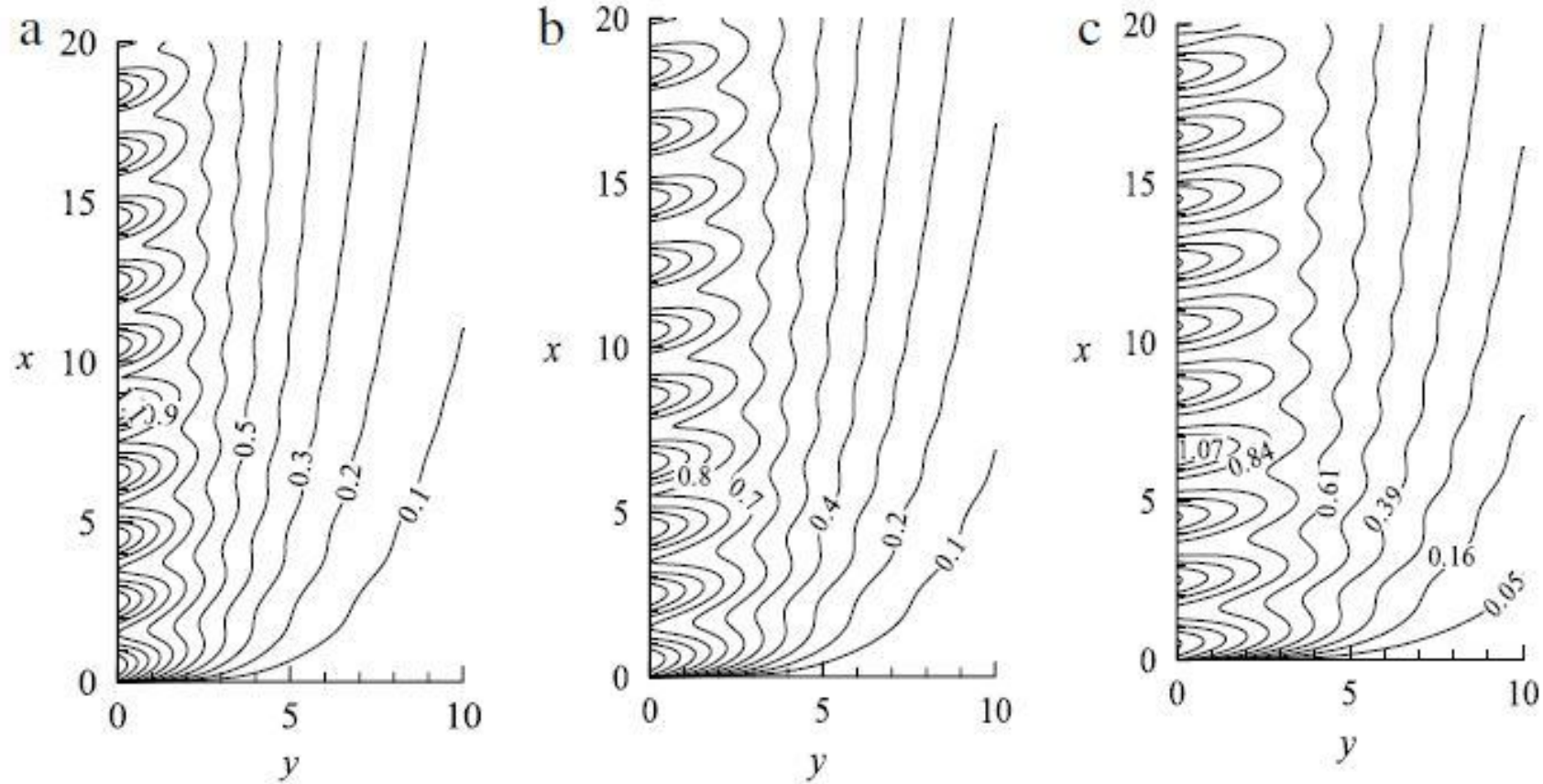

Figure: Isotherms for (a) α =0.1 (b) α = 0.2 (c) α=*0.3* while Pr = 0.7