NESA NATIONAL EXAMINATION AND SCHOOL INSPECTION AUTHORITY

Applied Physics B

T2-180

Tuesday, 15 July 2025
8:30 AM to 11:30 AM

Names:.....

Index number :.....

TSS NATIONAL EXAMINATIONS, LEVEL 5, 2024-2025

QUESTIONS and ANSWERS BOOKLET

TRADE (s): AUT, WIR, LET, FOR, WOT, MAT, ETE, ELT, REN, BDC, PWO, LSV, PLT, IND, MNT, CSA, NIT, SWD

SUBJECT: APPLIED PHYSICS B

DURATION: 3 Hours

Read carefully the instructions on page 3

TOTAL MARKS...../100

FOR EXAMINER'S USE ONLY

QUESTIONS	1	2	3	4	5	6	7	8	9	10	Total
Marks											

QUESTIONS	11	12	13	14	15	16	17	18	19	20	Total
Marks											

QUESTIONS	21	22	23	24	25	26	27	28	29	30	Total
Marks											

TSS NATIONAL EXAMINATIONS, LEVEL 5 ,2024-2025

TRADES: AUT, WIR, LET, FOR, WOT, MAT, ETE, ELT, REN, BDC, PWO, LSV, PLT, IND, MNT, CSA, NIT, SWD

SUBJECT: Applied Physics B

DURATION: 3 HOURS

INSTRUCTIONS TO CANDIDATE:

1. This Exam paper is composed of **three sections (A, B and C).** Follow the instructions given below and answer the indicated questions for a total of **100 marks.**

   Section **A:** Fifteen (15) questions which are **Compulsory** **55 marks**

   Section **B:** Among the five (5) questions, attempt any three (3) **30 marks**

   Section **C:** One **(1)** compulsory question **15 marks**

2. Fill in your actual **Names** and **Index number** on the provided space(Cover).
3. Do not remove or tear any page or part of it of this Questions and Answers Booklet.
4. Answer in the language in which the Examination is set.
5. In section **A**, answer questions in the provided space. In case of multiple choice questions, just **circle** the letter corresponding to the correct option.
6. In section **B** and **C**, answer questions in the provided space after section C questions.
7. **Allowed materials**

   -**Blue** or **black** pen and Pencil

   -Mathematical set

   - Non-programmable calculators

SECTION A: ATTEMPT ALL QUESTIONS (55MarkS)

01. Read carefully the following questions and choose the correct option.

I) What is the dimensions of force? **(1Mark)**

a) MLT

b) MLT^{-2}

c) MLT^{-1}

d) $ML^{-1}T^{-1}$

II) What is the correct statement in the following? **(1Mark)**

A micrometer is a device used to measure:

a) lengths from $0.01\,mm$ up to $50\,mm$.

b) lengths from $0.1\,mm$ up to $200\,mm$.

c) lengths from $0.1\,m$ up to $100\,m$.

d) lengths from $0.1\,mm$ up to $100\,cm$.

III) What is the value of significant figures in the number 5.609? **(1Mark)**

a) 1

b) 2

c) 3

d) 4

IV) Which of the following is not an SI base unit? **(1Mark)**

a) Kilogram

b) Newton

c) Meter

d) Second.

02. Read carefully the following questions and choose the correct option.

I) What is the SI unit of velocity? **(1Mark)**

a) m/s^2

b) m/s

c) N

d) J

II) The slope of velocity –time graph for a uniformly linear retarded motion is: **(1Mark)**

a) positive

b) negative

c) zero

d) can be positive, negative or zero.

III) The distance travelled by a body in a given direction divided by the time taken to travel that distance is called **(1Mark)**

a) instantaneous speed

b) Average acceleration

c) average velocity

d) Instantaneous acceleration

IV) A particle starts with a velocity u and moves with acceleration a, what is the nature of the graph of displacement (x) against the time (t) ? **(1Mark)**

a) Straight line.

b) Symmetric parabola.

c) Asymmetric parabola.

d) Rectangular hyperbola.

03. For the following statements, respond by **true** if the statement is correct and by **false** if the statement is wrong.

a) According to Coulomb's law, two electric charged particles are repelling if they are unlike charges and attracting if they are like charges..... **(1Mark)**

b) In a region where there is a uniform electric field, the electric field strength is the same at all points in that region..... **(1Mark)**

c) A phenomenon in which a material can be charged without any actual contact with a charged body is called electrostatic induction..... **(1Mark)**

d) If the plates of a parallel plate capacitor are oppositely charged then the total electric charge is positive and different from zero. ..... **(1Mark)**

04. Read carefully the following questions and choose the correct option.

I) What is the critical angle for total internal reflection? **(1Mark)**

a) The angle of incidence for which the angle of refraction is 90^0.

b) The angle of refraction for which angle of incidence is 90^0.

c) The angle of incidence for which the angle of refraction is 0^0.

d) The angle of refraction for which the angle of incidence is 0^0.

II) What is the nature of the image formed by a concave mirror when the object is placed at the focus? **(1Mark)**

a) Virtual and erect

b) Real and inverted

c) Real and erect

d) Virtual and inverted

III) The image formed by a convex mirror is **(1Mark)**

a) always real.

b) real or virtual depending on the object distance.

c) always inverted.

d) always virtual.

IV. What happens to the path of light when it enters a denser medium from a rarer medium? **(1Mark)**

a) It bends

b) It scatters

c) It travels in a straight line

d) It diffracts

05. Read carefully the following questions and choose the correct option.

I) Which of the following sources of energy is renewable source of energy? **(1Mark)**

a) Fossil fuels
b) Solar energy source
c) Oil
d) Natural gas

II) Which statement is characterizing a renewable source of energy? **(1Mark)**

a) Renewable source of energy emits little to no greenhouse gases in atmosphere.
b) Renewable source of energy is controllable
c) Renewable source of energy is not sustainable
d) Renewable source energy produces more power comparing to a non-renewable source of energy.

III) In a closed system in which the only forces acting are conservative forces, the law of conservation of mechanical energy states that the **(1Mark)**

a) potential energy is always equal to kinetic energy.
b) potential energy is always greater than kinetic energy.
c) sum of potential energy and kinetic energy is constant.
d) kinetic energy is always greater than potential energy.

IV) When a force retards the motion of a body, the work done is **(1Mark)**

a) zero.
b) negative.
c) positive.
d) Positive or negative depending upon the magnitude of force and displacement.

06. Read carefully each of the following questions, choose the correct option.

I) As the distance r between a point from a planet of mass M increases, the gravitational field strength at that point **(1Mark)**

a) increases

b) remains constant

c) decreases

d) becomes zero.

II) Kepler's second law states that a planet sweeps out equal areas in **(1Mark)**

a) equal distances

b) equal time intervals

c) different time intervals

d) equal speed

III) The formula for escape velocity v of a rocket from the surface of Earth, where symbols have their usual meanings is **(1Mark)**

a) $\sqrt{gR}$

b) $\sqrt{\frac{gR}{2}}$

c) $\sqrt{\frac{GM}{R}}$

d) $\sqrt{2\frac{GM}{R}}$

IV) What is the mathematical expression for Newton's law of universal gravitation? **(1Mark)**

a) $F = G\frac{m_1+m_2}{r^2}$

b) $F = G\frac{m_1\times m_2}{r}$

c) $F = G\frac{m_1\times m_2}{r^2}$

d) $F = G\frac{m_1\times m_2}{r^3}$

07. Read carefully each of the following questions and choose the correct option.

I) Which of the following gases is a greenhouse gas? **(1Mark)**

a) Helium (He)

b) Nitrogen(N_2)

c) Oxygen (O_2)

d) Methane (CH_4)

II) Which of the following is **NOT** an environmental impact of greenhouse effect? **(1Mark)**

a) Rising global temperature.

b) Rising sea level.

c) Ocean acidification.

d) Presence of more dusts in atmosphere.

III) The following human activities are one of the primary drivers of climate change. **(1Mark)**

a) Hydropower production

b) Burning fossil fuels

c) Waste management

d) Wind energy production

IV) Albedo of a surface is expressed as **(1Mark)**

a) the fraction of energy absorbed by the surface

b) the temperature of the surface

c) the fraction of energy reflected by the surface

d) the amount of energy radiated from the Sun

08. For the following statements answer by **true** or **false**

a) Electric field lines are always directed away from positive charges and toward negatives charges. ..... **(1Mark)**

b) When a glass rod is rubbed with silk, glass becomes positively charged, so silk gains electrons..... **(1Mark)**

c) The magnitude of the electric force on a charged particle moving in a uniform electric field depends on its mass..... **(1Mark)**

d) A zero electric field always means zero electric field potential. ..... **(1Mark)**

09. Read carefully each of the following questions and choose the correct option.

I) Which of the following best describes a field force? **(1Mark)**

a) A force that requires direct contact between two objects.

b) A force that results from the interaction of objects without direct contact.

c) A force that occurs only when objects are in motion.

d) A force that resists the motion of an object on a surface.

II) A book resting on a table experiences a contact force known as: **(1Mark)**

a) Tension

b) Normal reaction force

c) Gravitational force

d) Magnetic force

III) Which fundamental force is responsible for holding electrons in an atom? **(1Mark)**

a) Strong nuclear force

b) Weak nuclear force

c) Gravitational force

d) Electromagnetic force

IV) The weak nuclear force plays a key role in: **(1Mark)**

a) Gravitational attraction

b) Electromagnetic repulsion

c) Nuclear decay

d) Binding of protons and neutrons

10. Choose the correct option. **(1Mark)**

I) Rate of flow of electric charge is

a) electric current.

b) resistance.

c) potential difference.

d) electronic current only.

II) Kirchhoff's voltage law states that in a closed loop, the algebraic sum of the products of electric currents and resistances plus the algebraic sum of the electromotive forces (emf) is **(1Mark)**

a) positive

b) negative

c) zero

d) equal to the total resistance.

III) Energy required to move a unit electric charge between two points in an electric circuit is **(1Mark)**

a) potential difference

b) electric resistance

c) electric current

d) conventional electric current

IV) If the voltage across a resistor is doubled, while the resistance remains constant, the electric current will **(1Mark)**

a) stay the same

b) decrease by a factor of 2

c) increase by a factor of 4

d) increase by a factor of 2

11. Indicate whether the statement is **true** or **false**.

a) The value of acceleration due to Earth's gravity remains constant regardless the altitude. ..... **(1Mark)**

b) Kepler's third law can be used to compare the orbits of any two planets around the Sun ..... **(1Mark)**

c) When a planet is close to the Sun, it moves faster. ..... **(1Mark)**

12. Read carefully the following questions, solve them and choose the correct option.

I. An object of mass m rests on rough inclined plane which forms an angle of 20^0 with the horizontal as indicated on figure 1. **(1Mark)**

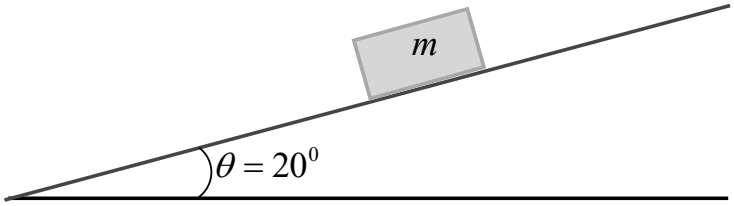

Figure 1

Determine the coefficient of static friction.

a) $\mu = 0.4$

b) $\mu = 0.5$

c) $\mu = 0.36$

d) $\mu = 0.2$.

II. From the sub-question (I), if the friction force on the block is 10N and the gravitational acceleration is 9.8m/s^2, determine the mass of block (in kg). **(2Marks)**

a) $m = 2.5kg$

b) $m = 3.0\,kg$

c) $m = 2.0\,kg$

d) $m = 4.5kg$

13. Read carefully the following questions, solve them and choose the correct option.

I) The change of internal energy of a thermodynamic system which has absorbed 2 kcal of heat and did 400 J of work is (1cal=4.2 J) **(1Mark)**

a) 2.0 kJ

b) 8.0 kJ

c) 3.5 kJ

d) 5.5 kJ.

II) When $26\,400\,\text{J}$ of energy is supplied to 2kg block of aluminum, its temperature rises from $20\,^0\text{C}$ to $35\,^0\text{C}$. Calculate the specific heat capacity of aluminum. **(2Marks)**

a) $c = 1000\text{J/kg}\,^0\text{C}$

b) $c = 71\ \text{J/kg}\,^0\text{C}$

c) $c = 880\,\text{J/kg}\,^0\text{C}$

d) $c = 400\text{J/kg}\,^0\text{C}$

14. Read carefully the following questions, solve them and choose the correct option.

I) A simple microscope has a focal length of $5\,\text{cm}$. The magnification at the least distance of distinct vision is m. If the least distance of distinct vision is $25\,\text{cm}$, determine the magnification of this simple microscope. **(1Mark)**

a) $\text{m} = 2$

b) $\text{m} = 4$

c) $\text{m} = 5$

d) $\text{m} = 6$

II) An astronomical telescope has an objective lens of focal length 120 cm and an eyepiece of focal length 5 cm. If the telescope is in normal adjustment, what is its angular magnification (magnifying power)? **(2Marks)**

a) $\text{m} = 24$

b) $\text{m} = 25$

c) $\text{m} = 30$

d) $\text{m} = 35$

15. Read carefully the following questions, solve them and choose the correct option.

I) The period of oscillation of a simple pendulum is 1.2 s in a place where $g = 9.8\,m/s^2$. What is the length of this simple pendulum? **(1Mark)**

a) $L = 1.3\,m$

b) $L = 0.9\,m$

c) $L = 0.36\,m$

d) $L = 0.56\,m$

II) A wave travelling in the positive x-direction having maximum displacement along y-direction of $1m$, wavelength $2\pi\ m$ and frequency $\frac{1}{\pi}Hz$ is represented by **(2Marks)**

a) $y(x,t) = \sin(2\pi\,x - 2\pi\,t)$

b) $y(x,t) = \sin(10\pi\,x - 20\pi\,t)$

c) $y(x,t) = \sin(2\pi\,x + 2\pi\,t)$

d) $y(x,t) = \sin(x - 2t)$

SECTION B: ATTEMPT ONLY THREE (3) QUESTIONS (30Marks)

16. A stone is thrown into the air at an angle of 70° to the horizontal with a speed of 20 m/s. The same stone is again thrown with the same speed at an angle of 30° as shown in the figure 2 below drawn not to scale.

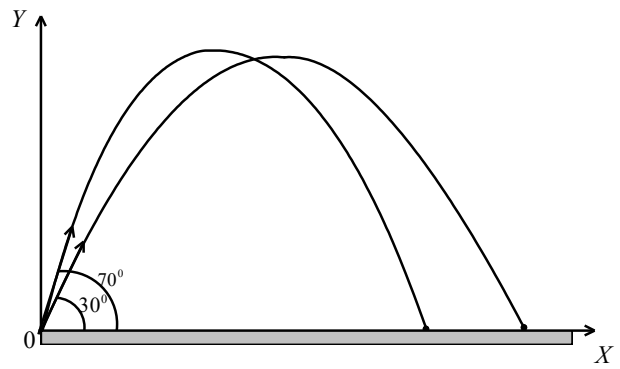

Figure 2

a) For which angle does the stone travel the farthest? **(1Mark)**

b) Why does the stone fall to the ground each time? **(1Mark)**

c) i) What is the time spent by the stone launched at 70° to reach the maximum height? Acceleration due to gravity $9.81 m/s^2$. **(2Marks)**

ii) What is the maximum height reached by the stone launched at 70°? **(2Marks)**

iii) Calculate the total flight time (between launch and touching the ground) of the stone launched at an angle of 70°. **(2Marks)**

d) Calculate the maximum horizontal range of a projectile launched at an angle of 30°. **(2Marks)**

17. A) Answer multiple choice questions by choosing the correct option.

I) What is the relationship between the speed and pressure of a fluid, as described by Bernoulli's principle? **(2Marks)**

a) As speed increases, pressure increases.

b) As speed increases, pressure decreases.

c) Speed and pressure are unrelated.

d) As speed decreases, pressure decreases.

II) How does the equation of continuity explain the relationship between the speed of a fluid and the cross-sectional area of a pipe? **(2Marks)**

a) As the cross-sectional area increases, the speed of the fluid decreases.

b) As the cross-sectional area increases, the speed of the fluid increases.

c) The speed of the fluid is constant regardless of the cross-sectional area.

d) As the cross-sectional area decreases, the speed of the fluid decreases.

III) How does Newton's third law explain the lift generated by an airplane wing? **(2Marks)**

a) The lift is generated by the friction between the wing and the air.

b) The lift is generated by the force of the engine pushing the airplane forward.

c) The lift is generated by the weight of the airplane.

d) The lift is generated by the difference in air pressure above and below the wing.

B) a) When an adult is standing up, the vertical separation between the feet and heart is $1.35\,\text{m}$ as indicated in the figure 3 below. If the density of blood is $1060\ \text{kg/m}^3$, determine the difference in blood pressure $P_2 - P_1$ between the feet and the heart. **(2Marks)**

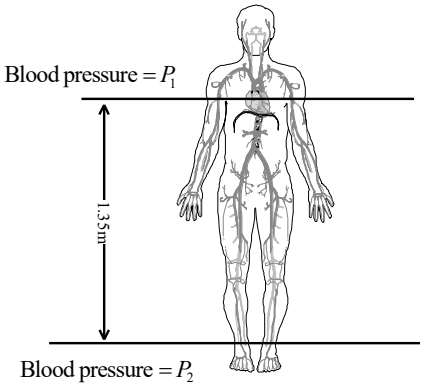

Figure 3

b) Determine the difference in blood pressure $P_2 - P_1$ between the feet and the heart if the body is horizontal as shown in the figure 4. **(2Marks)**

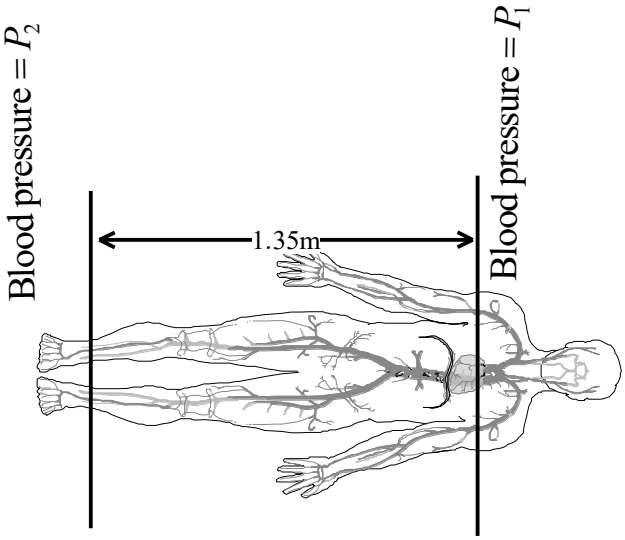

Figure 4

18. Answer the following sub-questions

I) An object is placed $9cm$ in front of a mirror . The image is $3cm$ closer to the mirror when the mirror is convex than when the mirror is planar (see the figure 5 below).

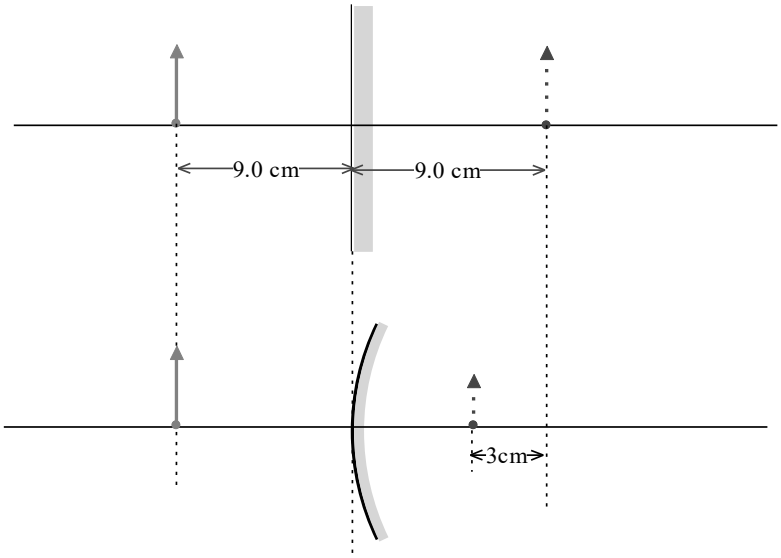

Figure 5

a) Find the focal length of the convex mirror. Note that the position of virtual image is negative. **(3Marks)**

b) i) If the height of the object is $3cm$ find the height of its image by the convex mirror. **(2Marks)**

ii) Is image upright or inverted? Justify your answer. **(2Marks)**

II) When a ray is incident to the interface between two media with different refractive indices, it is possible to have reflection of light and a refraction of light in the second medium, but sometimes this refraction does not exist.

a) State the conditions that are required for not having refraction of light in second medium. **(2Marks)**

b) If there is no refraction angle, what is the name of this phenomenon? **(1Mark)**

19. A hanging massless spring stretches by 35.0 cm when an object of mass 450 g is hung on it at rest as shown in the figure 6, not to scale. In this situation, we define its position as $x = 0$. The object is pulled down an additional 18.0 cm and released from rest to oscillate without friction.

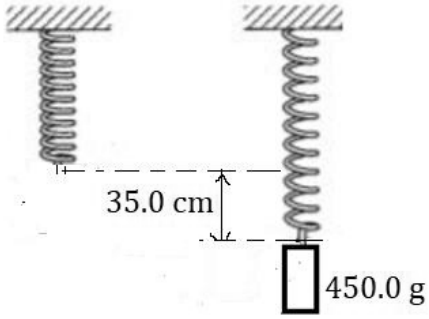

Figure 6

a)Find the spring constant k. Acceleration due to gravity $g = 9.81\ m/s^2$. **(1Mark)**

b)Write an expression for the displacement x of the mass as function of time. Include appropriate numerical values. The initial condition can help you to find the initial phase φ_0 . **(3Marks)**

c)What is the velocity of the mass undergoing simple harmonic motion on the above spring at t =10 s? **(2Marks)**

d)i) What is the potential energy of this system spring-mass when x= 0? **(2Marks)**

ii)Is this potential energy equal to the total mechanical energy of the system spring- mass? Explain your answer. **(2Marks)**

20. Read carefully the passage below and answer related questions.

Climate change needs behaviour change

Climate change is the defining global challenge of our time. Rapid changes to the global climate over the past several decades' have already resulted in widespread impacts across human societies and natural systems. Continued changes of this magnitude will have severe and irreversible planetary impacts lasting hundreds of thousands of years, further threatening people and communities everywhere. lessening the worst of climate impacts requires a substantial push to limit global temperature changes over the course of this century. This in turn depends on humankind's ability to achieve rapid and sustained reduction in greenhouse gas emissions over the next several decades. Doing so demands a transformation of our economy and our systems of production and consumption, from changing how we generate energy and produce food to how we consume goods and services. While the focus for most of this change often rests at the scale of government and industry, changes at the level of individuals, households and communities are profoundly greater importance than most people appreciate.

Reference: Williamson, K., Satre- Meloy, A., Velasco, K.& Green, K. (2018), *Climate change needs behaviour change*, pp. 5

Sub-questions

a) Explain how greenhouse gases contribute to the climate Change according to the Authors. **(2Marks)**

b) The authors mentioned the facts related to climate change in their research topic "climate change needs behaviour change". Formulate what the authors wrote to confirm that the negative effect of climate change is real. **(2Marks)**

c) i) The main way to lessen climate change is given in this extract. Which one? **(1Mark)**

ii) How does Government of Rwandan support practically the ways to reduce climate change proposed by the authors? Choose any three ways. **(3Marks)**

d) Evaluate the extent to which Rwanda is being affected by climate change. **(2Marks)**

SECTION C: ONE (1) COMPULSORY QUESTION (15Marks)

21. Use essay format to discuss the environmental impacts of using fossil fuels for energy production. Note that the three main parts of an essay are introduction, body and conclusion. **(15Marks)**

END

RESERVED SPACE FOR SECTION B AND C ANSWERS

Do not write in this margin

Do not write in this margin

Do not write in this margin

Do not write in this margin

Do not write in this margin

Do not write in this margin