BBM 102 – Introduction to Programming II

Spring 2019

Collections Framework

Today

- The **`java.util.Arrays`** class
- Java Collection Framework
  - java.util.Collection interface
  - java.util.List interface
    - java.util.ArrayList class
  - java.util.Set interface
    - java.util.HashSet class
  - java.util.Map interface
    - java.util.HashMap class
    - java.util.Hashtable class
    - java.util.Properties class

java.util.Arrays

- Provides high-level static methods for manipulating arrays, such as:
  - **sort** for sorting an array,
  - **binarySearch** for searching a sorted array,
  - **equals** for comparing arrays
  - **fill** for placing values into an array

Arrays – Example

```
3   import java.util.Arrays;
4
5   public class UsingArrays
6   {
7      private int intArray[] = { 1, 2, 3, 4, 5, 6 };
8      private double doubleArray[] = { 8.4, 9.3, 0.2, 7.9, 3.4 };
9      private int filledIntArray[], intArrayCopy[];
10
11     // constructor initializes arrays
12     public UsingArrays()
13     {
14        filledIntArray = new int [ 10 ]; // create int array with 10 elements
15        intArrayCopy = new int [ intArray.length ];
16
17        Arrays.fill( filledIntArray, 7 ); // fill with 7s
18        Arrays.sort( doubleArray ); // sort doubleArray ascending
19
20        // copy array intArray into array intArrayCopy
21        System.arraycopy( intArray, 0, intArrayCopy,
22           0, intArray.length );
23     } // end UsingArrays constructor
```

Arrays – Example (continued)

```
47      // find value in array intArray
48      public int searchForInt( int value )
49      {
50         return Arrays.binarySearch( intArray, value );
51      } // end method searchForInt
52
53      // compare array contents
54      public void printEquality()
55      {
56         boolean b = Arrays.equals( intArray, intArrayCopy );
57         System.out.printf( "intArray %s intArrayCopy\n",
58            ( b ? "==" : "!=" ) );
59
60         b = Arrays.equals( intArray, filledIntArray );
61         System.out.printf( "intArray %s filledIntArray\n",
62            ( b ? "==" : "!=" ) );
63      } // end method printEquality
```

Arrays – Example (continued)

```
26      public void printArrays()
27      {
28         System.out.print( "doubleArray: " );
29         for ( double doubleValue : doubleArray )
30            System.out.printf( "%.1f ", doubleValue );
31
32         System.out.print( "\nintArray: " );
33         for ( int intValue : intArray )
34            System.out.printf( "%d ", intValue );
35
36         System.out.print( "\nfilledIntArray: " );
37         for ( int intValue : filledIntArray )
38            System.out.printf( "%d ", intValue );
39
40         System.out.print( "\nintArrayCopy: " );
41         for ( int intValue : intArrayCopy )
42            System.out.printf( "%d ", intValue );
43
44         System.out.println( "\n" );
45      } // end method printArrays
```

Arrays – Example (continued)

```
    public static void main( String args[] )
    {
       UsingArrays usingArrays = new UsingArrays();

       usingArrays.printArrays();
       usingArrays.printEquality();

       int location = usingArrays.searchForInt( 5 );
       if ( location >= 0 )
          System.out.printf(
             "Found 5 at element %d in intArray\n", location );
       else
          System.out.println( "5 not found in intArray" );

       location = usingArrays.searchForInt( 8763 );
       if ( location >= 0 )
          System.out.printf(
             "Found 8763 at element %d in intArray\n", location );
       else
          System.out.println( "8763 not found in intArray" );
    } // end main
 } // end class UsingArrays
```

Java Collections Framework

- Group of objects can be kept in an array, but arrays are not feasible when number of objects increase or decrease during the execution of the program
- The ***Java Collections Framework*** is a collection of interfaces and classes that may be used to manipulate groups of objects
- The classes implemented in the ***Java Collections Framework*** serve as reusable data structures and include algorithms for common tasks such as sorting or searching
- The framework uses parameterized classes so you can use them with the classes of your choice
- The framework is largely contained in the package **`java.util`**

Basic collections

The three major collections in Java:

- ***Set***: A collection of elements that is guaranteed to contain no duplicates.
- ***List***: An ordered collection of elements, often accessed by integer indexes or by iteration.
- ***Map***: A collection of key/value pairs in which each key is associated with a corresponding value.

java.util.Collection interface

- It is the highest level of Java's framework for collection classes
- It describes the basic operations that all collection classes (except **`Map`**) should implement
- The JDK does not provide any *direct* implementations of this interface: it provides implementations of more specific sub-interfaces like Set and List as in the example diagram below:

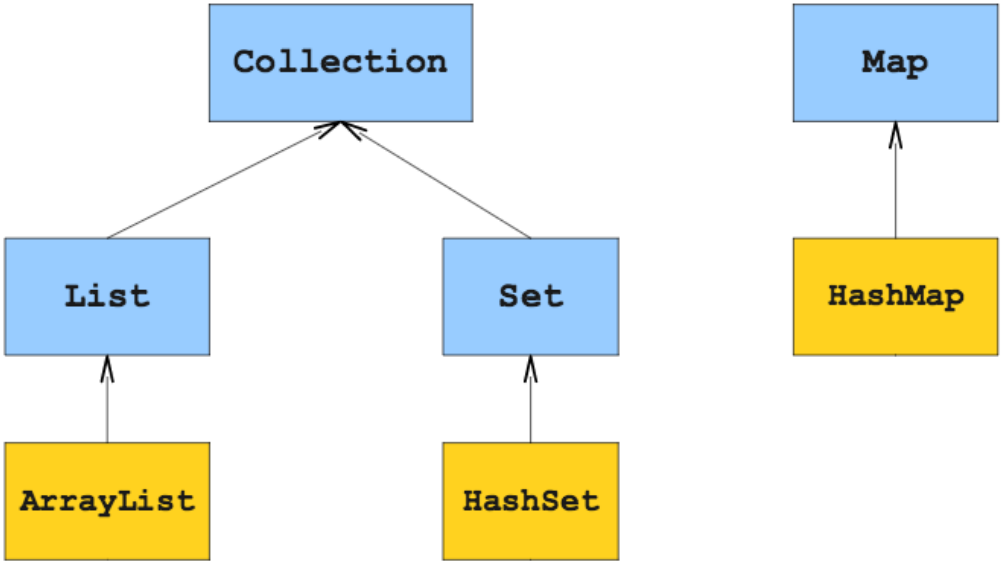

What is a Set?

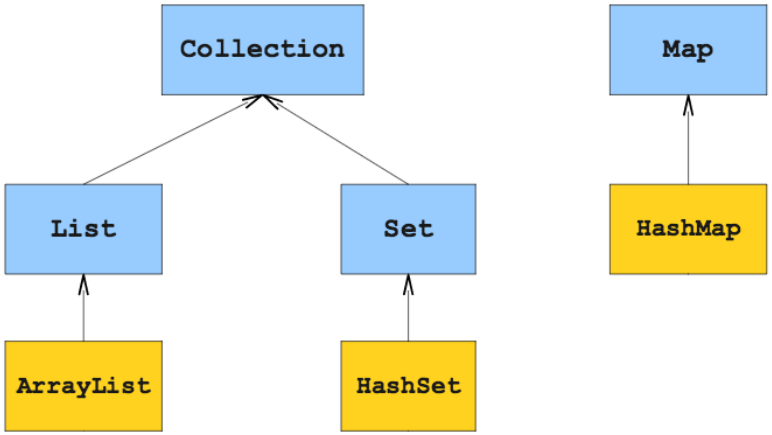

java.util.Set interface

- A **Set** is a **Collection** that contains unique elements (i.e., no duplicate elements).
- The collections framework contains several **Set** implementations, including **HashSet**
- Major operations are:
  - Adding an element
  - Removing an element
  - Checking whether an element exists
- Useful for answering questions of the form “have I seen this before?”

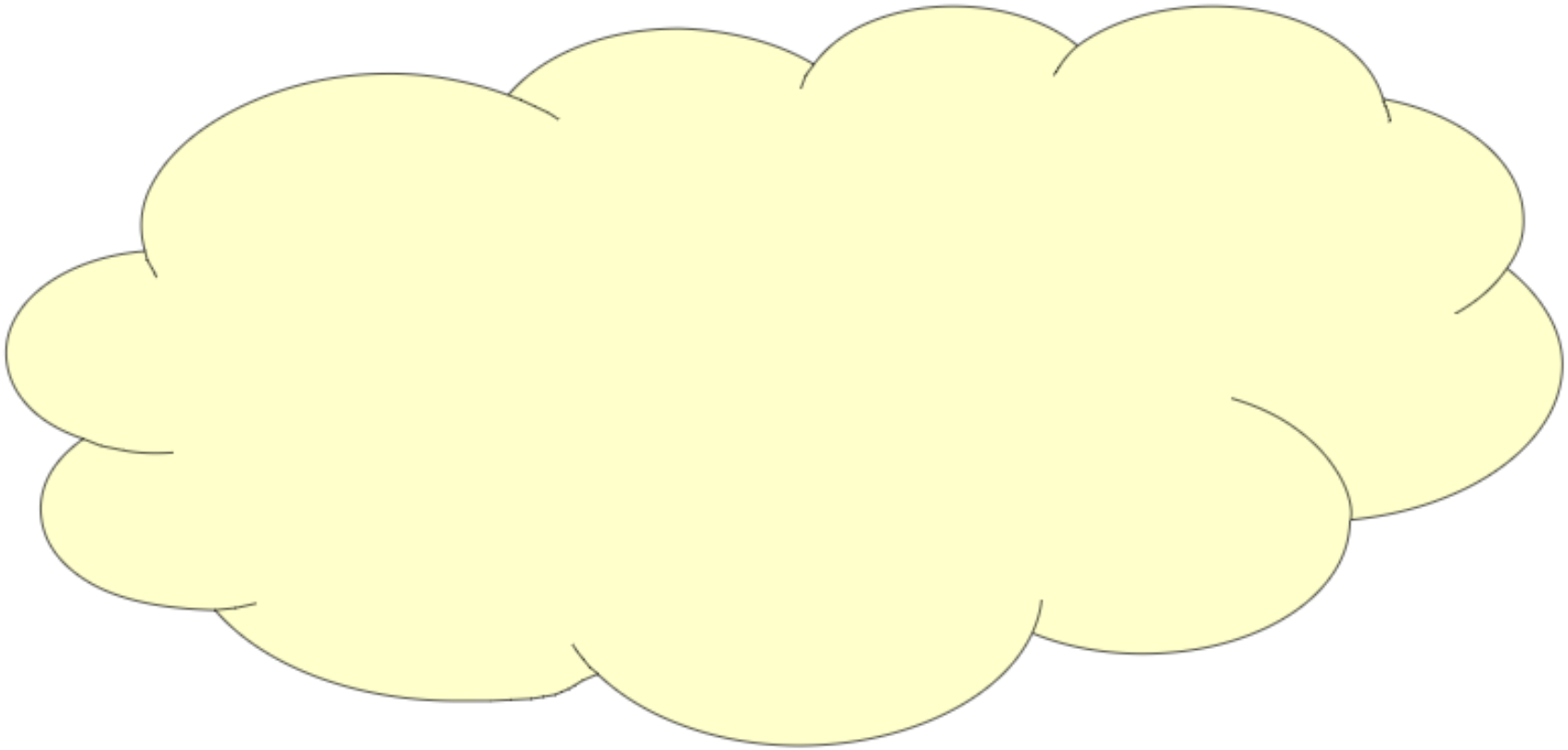

```
HashSet<String> mySet = new HashSet<String>();
```

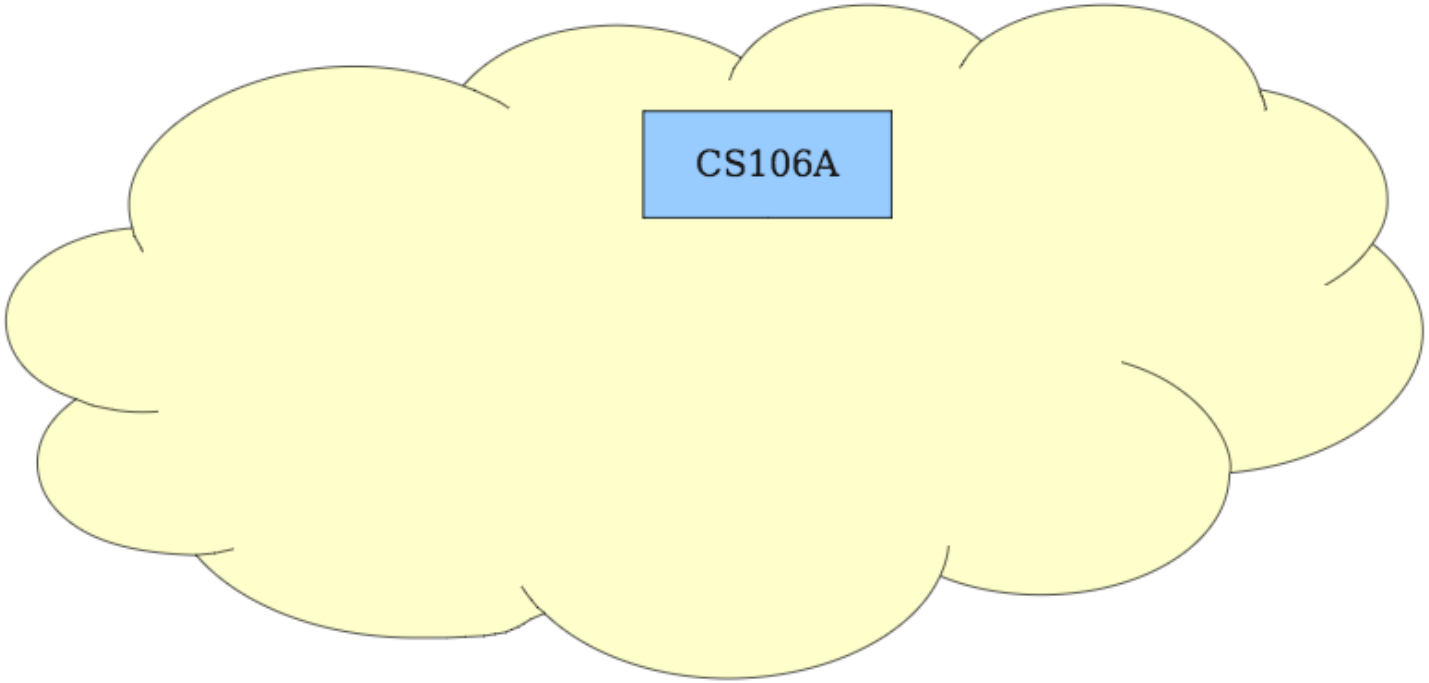


```
HashSet<String> mySet = new HashSet<String>();
mySet.add("CS106A");
```

To add a value to a **HashSet**, use the syntax

***set*.add(*value*)**

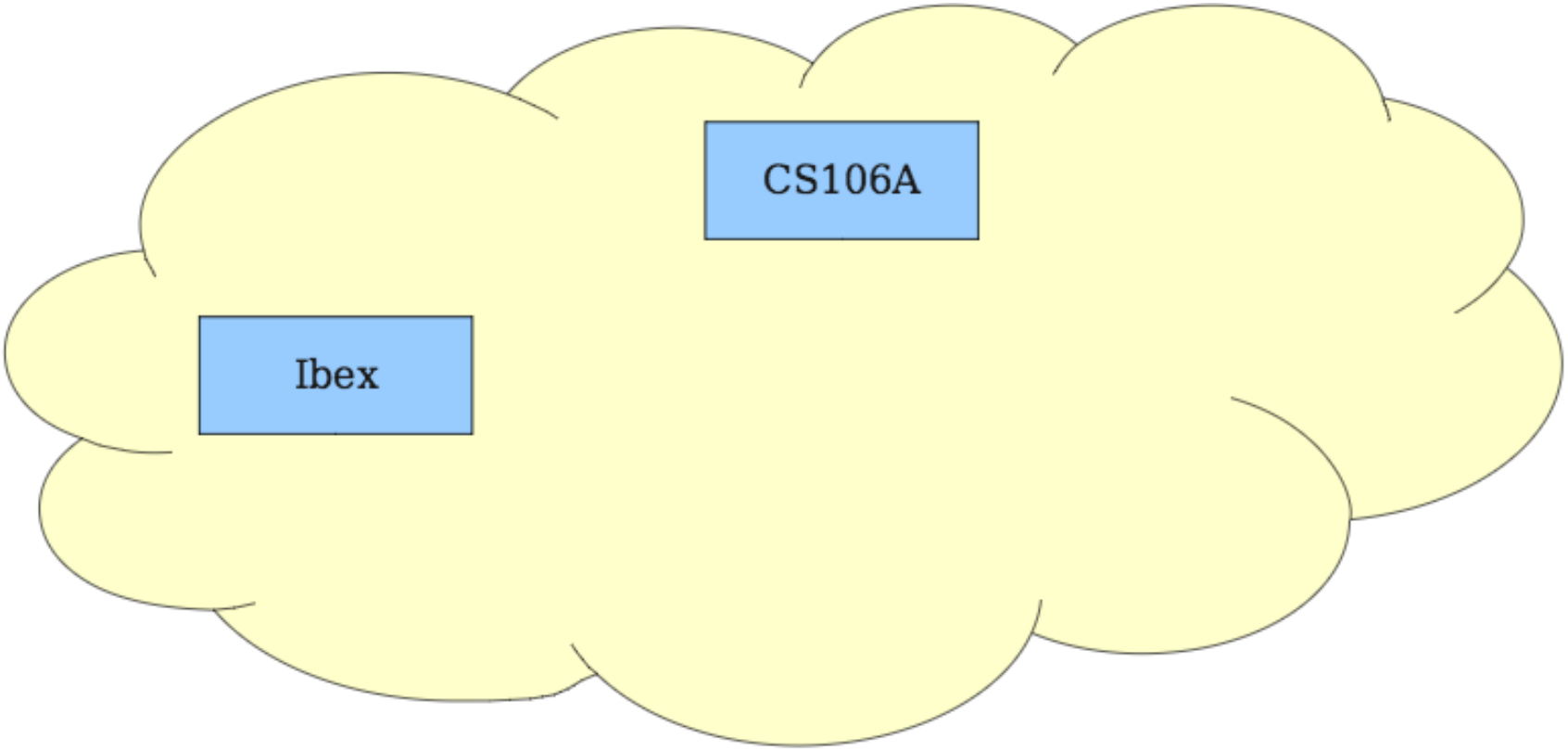


```
HashSet<String> mySet = new HashSet<String>();
mySet.add("CS106A");
mySet.add("Ibex");
```

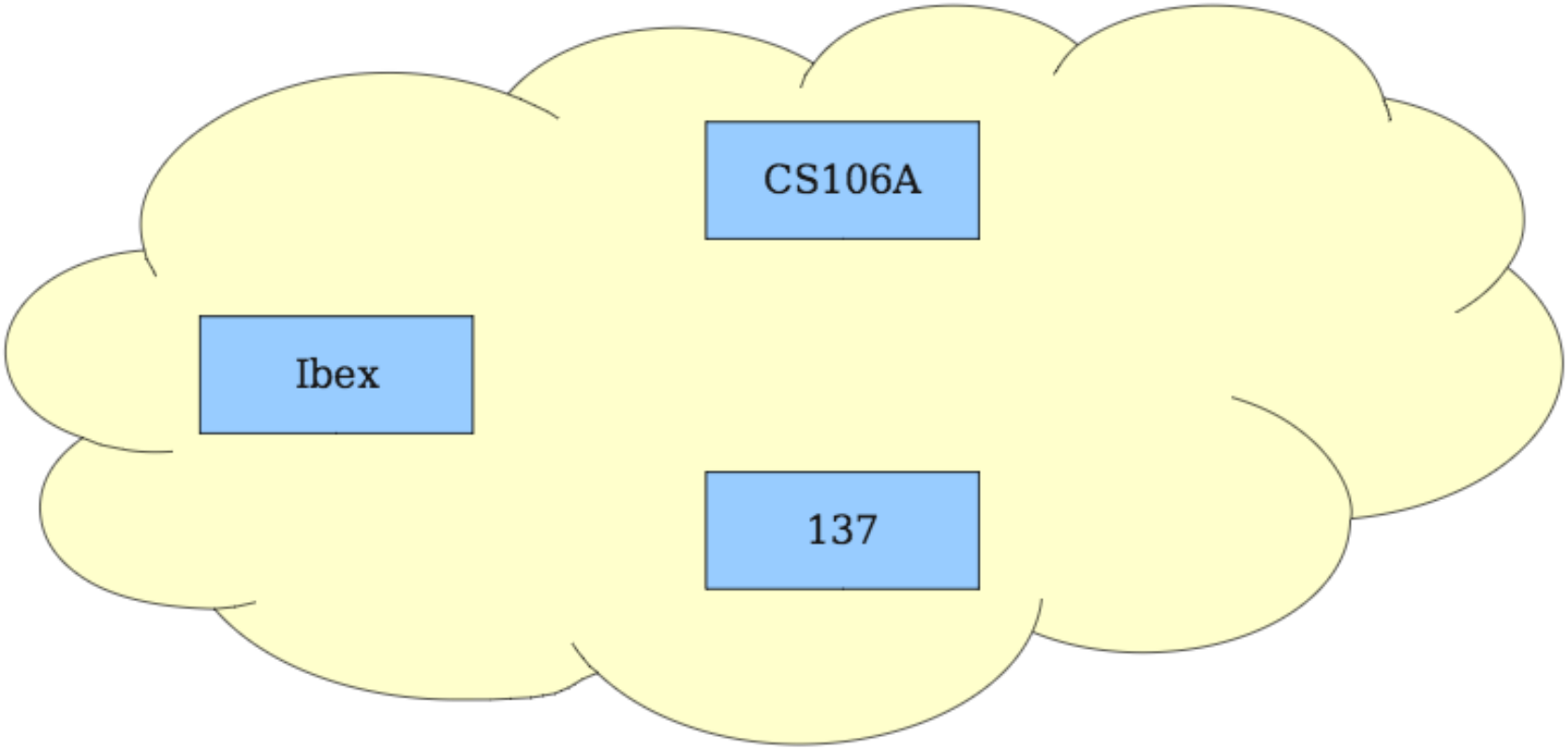


```
HashSet<String> mySet = new HashSet<String>();
mySet.add("CS106A");
mySet.add("Ibex");
mySet.add("137");
```

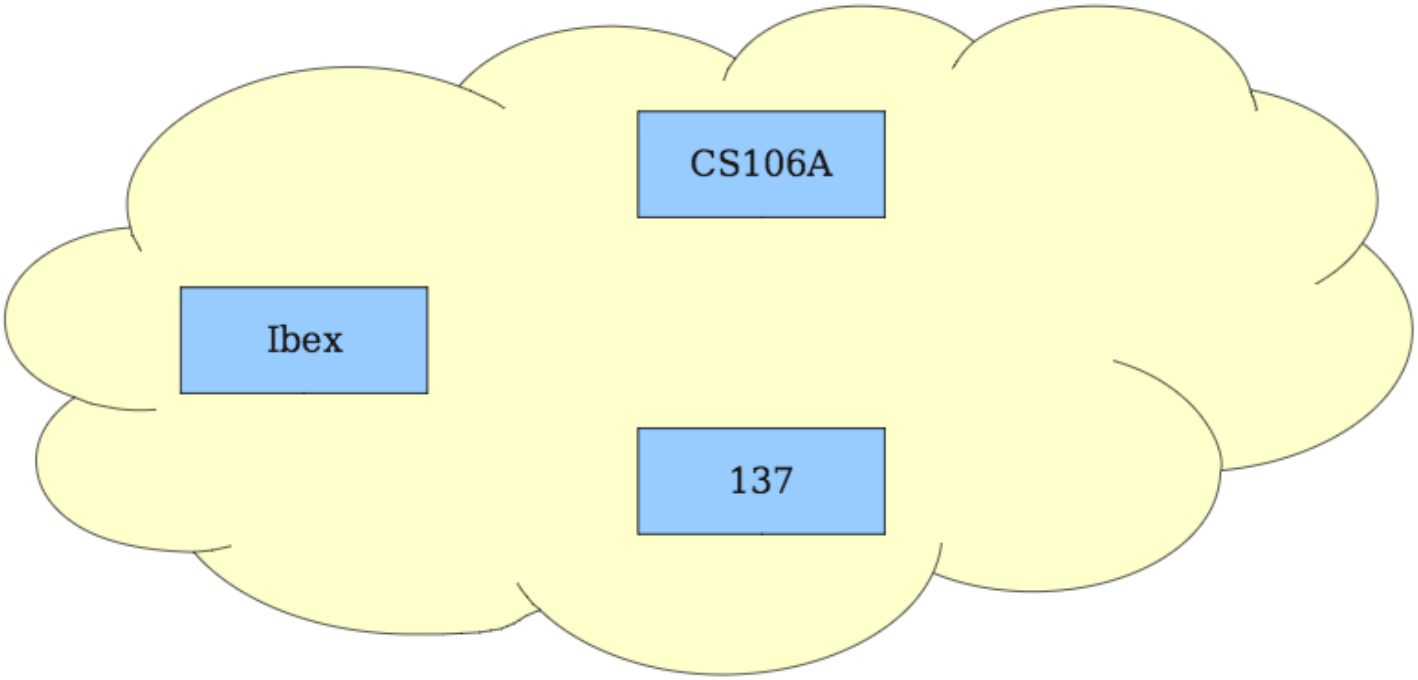


```
HashSet<String> mySet = new HashSet<String>();
mySet.add("CS106A");
mySet.add("Ibex");
mySet.add("137");
mySet.add("CS106A");
```

If you **add** a value pair where the value exists, nothing happens.

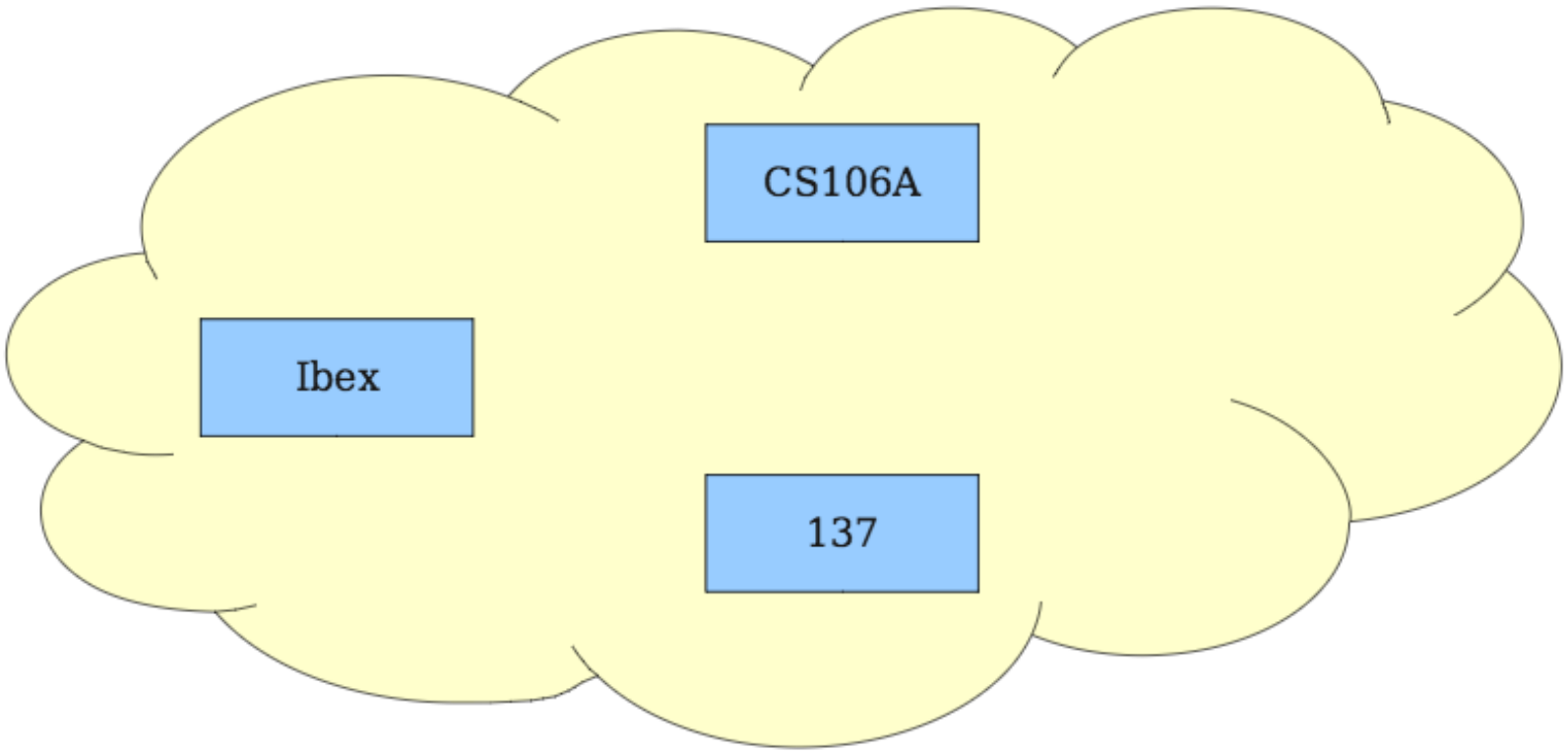


```
HashSet<String> mySet = new HashSet<String>();
mySet.add("CS106A");
mySet.add("Ibex");
mySet.add("137");
mySet.add("CS106A");

mySet.contains("Ibex");
```

Basic Set Operations

- To insert an item:
  - **set.add(value)**
- To check whether a value exists
  - **set.contains(value)**
- To remove an item
  - **set.remove(value)**

- Union of two sets
  - **set1.addAll(set2)**
- Intersection of two sets
  - **set1.retainAll(set2)**
- Difference of two sets
  - **set1.removeAll(set2)**

HashSet - Example

```
3   import java.util.List;
4   import java.util.Arrays;
5   import java.util.HashSet;
6   import java.util.Set;
7   import java.util.Collection;
8
9   public class SetTest
10  {
11     private static final String colors[] = { "red", "white", "blue",
12        "green", "gray", "orange", "tan", "white", "cyan",
13        "peach", "gray", "orange" };
14
15     // create and output ArrayList
16     public SetTest()
17     {
18        List< String > list = Arrays.asList( colors );
19        System.out.printf( "ArrayList: %s\n", list );
20        printNonDuplicates( list );
21     } // end SetTest constructor
```

HashSet – Example (continued)

```
    // create set from array to eliminate duplicates
    private void printNonDuplicates( Collection< String > collection )
    {
       // create a HashSet
       Set< String > set = new HashSet< String >( collection );

       System.out.println( "\nNonduplicates are: " );

       for ( String s : set )
          System.out.printf( "%s ", s );

       System.out.println();
    } // end method printNonDuplicates

    public static void main( String args[] )
    {
       new SetTest();
    } // end main
 } // end class SetTest
```

What is a List?

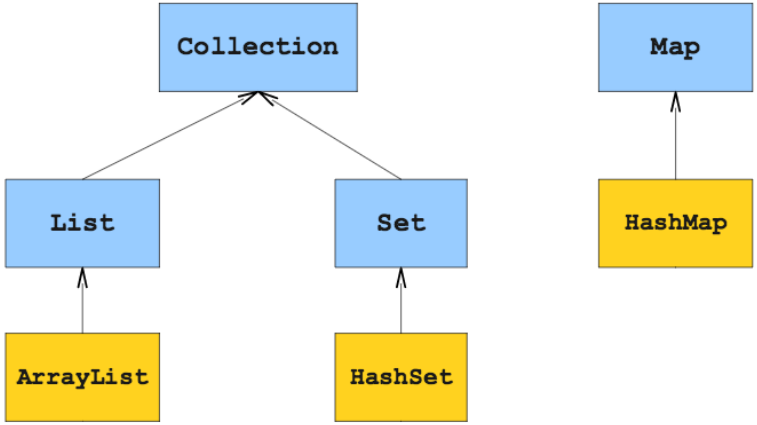

java.util.List interface

- A List (sometimes called a **sequence**) is an ordered Collection
- It can contain duplicate elements
- Like array indices, List indices are zero based (i.e., the first element's index is zero)
- In addition to the methods inherited from Collection, List provides methods for;
  - manipulating elements via their indices
  - manipulating a specified range of elements
  - searching for elements
  - getting a **ListIterator** to access the elements.

Iterators

- To visit every element of a collection, you can use the "for each" loop:

```
for(ElemType elem: collection){
        …
}
```

- Alternatively, you can use an **iterator**, an object whose job is to walk over the elements of a collection.
- The iterator has two commands:
  - **hasNext()** returns true if there are more items to visit.
  - **next()** returns the next item and moves the iterator to the next position.

ArrayList and Iterator - Example

```
3   import java.util.List;
4   import java.util.ArrayList;
5   import java.util.Collection;
6   import java.util.Iterator;
7
8   public class CollectionTest
9   {
10     private static final String[] colors =
11        { "MAGENTA", "RED", "WHITE", "BLUE", "CYAN" };
12     private static final String[] removeColors =
13        { "RED", "WHITE", "BLUE" };
14
15     // create ArrayList, add Colors to it and manipulate it
16     public CollectionTest()
17     {
18        List< String > list = new ArrayList< String >();
19        List< String > removeList = new ArrayList< String >();
20
21        // add elements in colors array to list
22        for ( String color : colors )
23           list.add( color );
24
```

ArrayList and Iterator – Example (continued)

```
25         // add elements in removeColors to removeList
26         for ( String color : removeColors )
27            removeList.add( color );
28
29         System.out.println( "ArrayList: " );
30
31         // output list contents
32         for ( int count = 0; count < list.size(); count++ )
33            System.out.printf( "%s ", list.get( count ) );
34
35         // remove colors contained in removeList
36         removeColors( list, removeList );
37
38         System.out.println( "\n\nArrayList after calling removeColors: " );
39
40         // output list contents
41         for ( String color : list )
42            System.out.printf( "%s ", color );
43      } // end CollectionTest constructor
```

ArrayList and Iterator - Example (continued)

```
45      // remove colors specified in collection2 from collection1
46      private void removeColors(
47         Collection< String > collection1, Collection< String > collection2 )
48      {
49         // get iterator
50         Iterator< String > iterator = collection1.iterator();
51
52         // loop while collection has items
53         while ( iterator.hasNext() )
54
55            if ( collection2.contains( iterator.next() ) )
56               iterator.remove(); // remove current Color
57      } // end method removeColors
58
59      public static void main( String args[] )
60      {
61         new CollectionTest();
62      } // end main
63   } // end class CollectionTest
```

What is a Map?

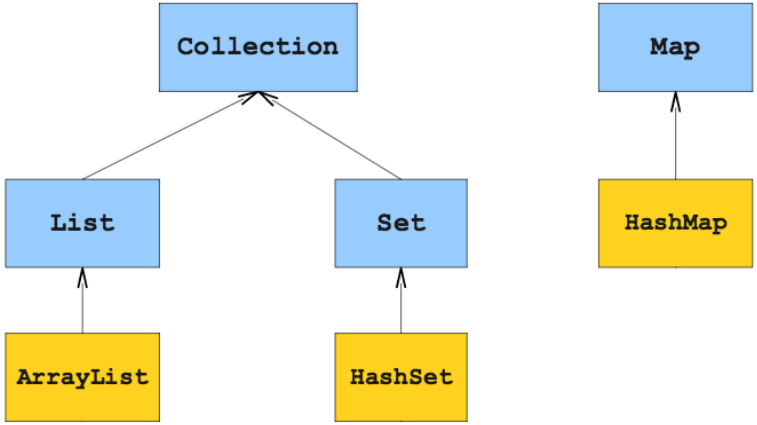

java.util.Map interface

- **Map**s associate keys to values and cannot contain duplicate keys (i.e., each key can map to only one value)
- **Map**s differ from **Set**s in that **Map**s contain keys and values, whereas **Set**s contain only values

- https://javarevisited.blogspot.com/2010/10/difference-between-hashmap-and.html

Property	HashMap	TreeMap	LinkedHashMap	HashTable
Iteration Order	Random	Sorted according to natural **order of keys**	Sorted according to the **insertion order**.	Random
Efficiency: Get, Put, Remove, ContainsKey	$O(1)$	$O(\log(n))$	$O(1)$	$O(1)$
Null keys/values	allowed	Not-allowed*	allowed	Not-allowed
Interfaces	Map	Map, SortedMap, NavigableMap	Map	Map
Synchronized	Not instead use Collection.synchronizedMap(new HashMap())			Yes but prefer to use ConcurrentHashMap
Implementation	Buckets	Red-Black tree	HashTable and LinkedList using doubly linked list of buckets	Buckets
Comments	Efficient	Extra cost of maintaining TreeMap	Advantage of TreeMap without extra cost.	Obsolete

HashMap - Example

```
3   import java.util.StringTokenizer;
4   import java.util.Map;
5   import java.util.HashMap;
6   import java.util.Set;
7   import java.util.TreeSet;
8   import java.util.Scanner;
9
10  public class WordTypeCount
11  {
12     private Map< String, Integer > map;
13     private Scanner scanner;
14
15     public WordTypeCount()
16     {
17        map = new HashMap< String, Integer >(); // create HashMap
18        scanner = new Scanner( System.in ); // create scanner
19        createMap(); // create map based on user input
20        displayMap(); // display map content
21     } // end WordTypeCount constructor
```

HashMap – Example (continued)

```
23      // create map from user input
24      private void createMap()
25      {
26         System.out.println( "Enter a string:" ); // prompt for user input
27         String input = scanner.nextLine();
28
29         // create StringTokenizer for input
30         StringTokenizer tokenizer = new StringTokenizer( input );
31
32         // processing input text
33         while ( tokenizer.hasMoreTokens() ) // while more input
34         {
35            String word = tokenizer.nextToken().toLowerCase(); // get word
36
37            // if the map contains the word
38            if ( map.containsKey( word ) ) // is word in map
39            {
40               int count = map.get( word ); // get current count
41               map.put( word, count + 1 ); // increment count
42            } // end if
43            else
44               map.put( word, 1 ); // add new word with a count of 1 to map
45         } // end while
46      } // end method createMap
```

HashMap – Example (continued)

```
48      // display map content
49      private void displayMap()
50      {
51         Set< String > keys = map.keySet(); // get keys
52
53         // sort keys
54         TreeSet< String > sortedKeys = new TreeSet< String >( keys );
55
56         System.out.println( "Map contains:\nKey\t\tValue" );
57
58         // generate output for each key in map
59         for ( String key : sortedKeys )
60            System.out.printf( "%-10s%10s\n", key, map.get( key ) );
61
62         System.out.printf(
63            "\nsize:%d\nisEmpty:%b\n", map.size(), map.isEmpty() );
64      } // end method displayMap
65
66      public static void main( String args[] )
67      {
68         new WordTypeCount();
69      } // end main
70   } // end class WordTypeCount
```

What is a Hashtable?

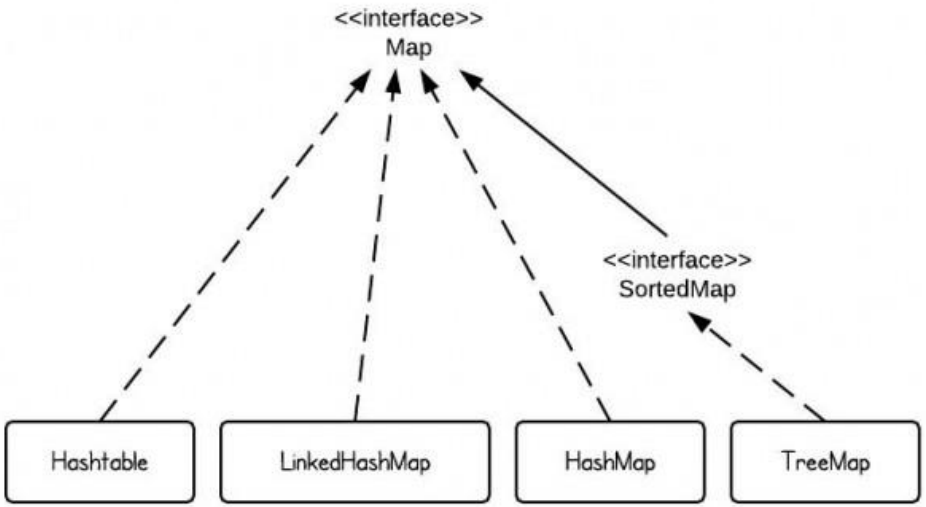

keys

Student #	Grade
107312	B+
168904	A+
...	
221655	B-

values

keys

Name	Ext.
Homer	1786
Marge	8113
...	
Lisa	4321

values

java.util.Properties class

- A **Properties** object is a *persistent* **Hashtable** that
  - stores key-value pairs of strings
  - assumes that you use methods **setProperty** and **getProperty** to manipulate the table rather than inherited **Hashtable** methods put and get.
  - A common use of Properties objects is to maintain application-configuration data or user preferences for applications

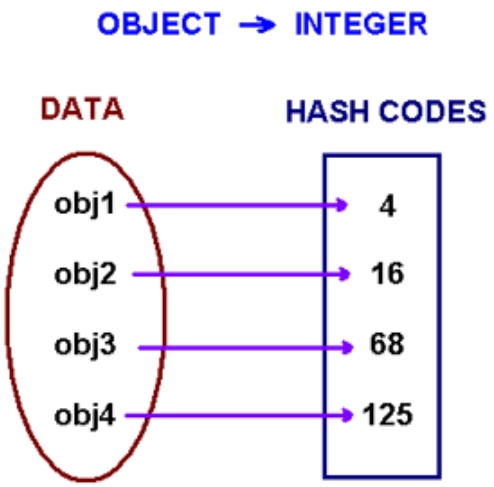

Properties - Example

```
3   import java.io.FileOutputStream;
4   import java.io.FileInputStream;
5   import java.io.IOException;
6   import java.util.Properties;
7   import java.util.Set;
8
9   public class PropertiesTest
10  {
11     private Properties table;
12
13     // set up GUI to test Properties table
14     public PropertiesTest()
15     {
16        table = new Properties(); // create Properties table
17
18        // set properties
19        table.setProperty( "color", "blue" );
20        table.setProperty( "width", "200" );
```

Properties – Example (continued)

```
22          System.out.println( "After setting properties" );
23          listProperties(); // display property values
24
25          // replace property value
26          table.setProperty( "color", "red" );
27
28          System.out.println( "After replacing properties" );
29          listProperties(); // display property values
30
31          saveProperties(); // save properties
32
33          table.clear(); // empty table
34
35          System.out.println( "After clearing properties" );
36          listProperties(); // display property values
37
38          loadProperties(); // load properties
```

Properties – Example (continued)

```
40          // get value of property color
41          Object value = table.getProperty( "color" );
42
43          // check if value is in table
44          if ( value != null )
45             System.out.printf( "Property color's value is %s\n", value );
46          else
47             System.out.println( "Property color is not in table" );
48       } // end PropertiesTest constructor
```

Properties – Example (continued)

```
50      // save properties to a file
51      public void saveProperties()
52      {
53         // save contents of table
54         try
55         {
56            FileOutputStream output = new FileOutputStream( "props.dat" );
57            table.store( output, "Sample Properties" ); // save properties
58            output.close();
59            System.out.println( "After saving properties" );
60            listProperties();
61         } // end try
62         catch ( IOException ioException )
63         {
64            ioException.printStackTrace();
65         } // end catch
66      } // end method saveProperties
```

Properties – Example (continued)

```
69      public void loadProperties()
70      {
71         // load contents of table
72         try
73         {
74            FileInputStream input = new FileInputStream( "props.dat" );
75            table.load( input ); // load properties
76            input.close();
77            System.out.println( "After loading properties" );
78            listProperties(); // display property values
79         } // end try
80         catch ( IOException ioException )
81         {
82            ioException.printStackTrace();
83         } // end catch
84      } // end method loadProperties
```

Properties – Example (continued)

```
86      // output property values
87      public void listProperties()
88      {
89         Set< Object > keys = table.keySet(); // get property names
90
91         // output name/value pairs
92         for ( Object key : keys )
93         {
94            System.out.printf(
95               "%s\t%s\n", key, table.getProperty( ( String ) key ) );
96         } // end for
97
98         System.out.println();
99      } // end method listProperties
100
101     public static void main( String args[] )
102     {
103        new PropertiesTest();
104     } // end main
105  } // end class PropertiesTest
```

Summary

- Arrays are used for a group of objects, but maintanence is difficult when the size of the group changes during the execution of the program
- Java Collection Framework includes many interfaces and classes to easily manage groups of objects
- The interfaces and classes of the framework are mostly in **java.util** package
- Various interfaces include methods for special algorithms of various data structures
- Framework includes various implementations of these interfaces
- It is possible to implement or extend the interfaces/classes of the framework for new/different implementations of new/different data structures

Acknowledgements

- The course material used to prepare this presentation is mostly taken/adopted from the list below:
  - Java - How to Program, Paul Deitel and Harvey Deitel, Prentice Hall, 2012
  - Building Java Programs – A Back to Basics Approach, Stuart Reges and Marty Stepp, Addison Wesley, 2011
  - Stanford, Collections – lecture notes