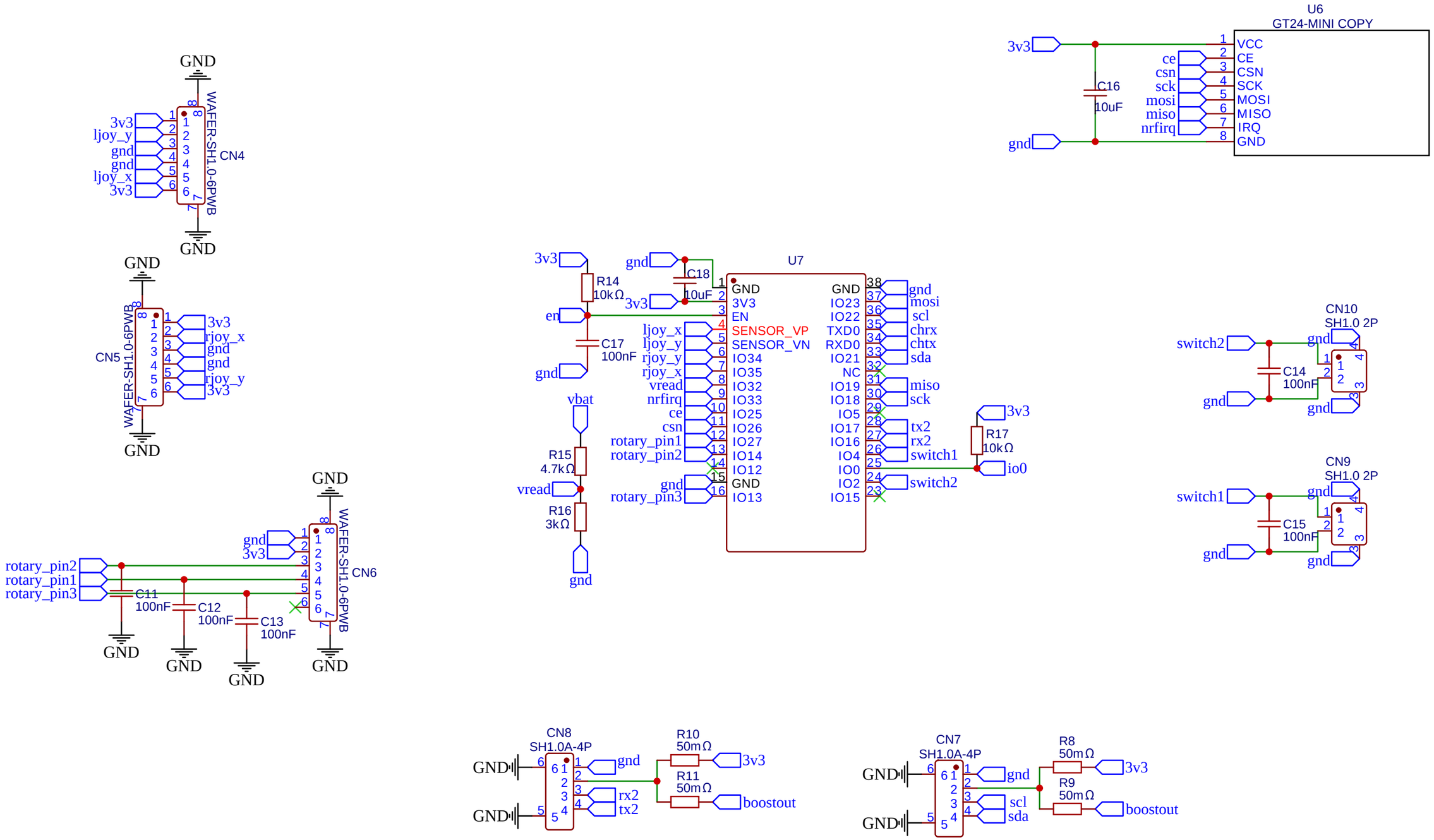

TITLE: Sheet_1		REV: 1.0
	Company: gtwhhh	Sheet: 1/2
	Date: 2023-03-05 Drawn By: gtwhhh	

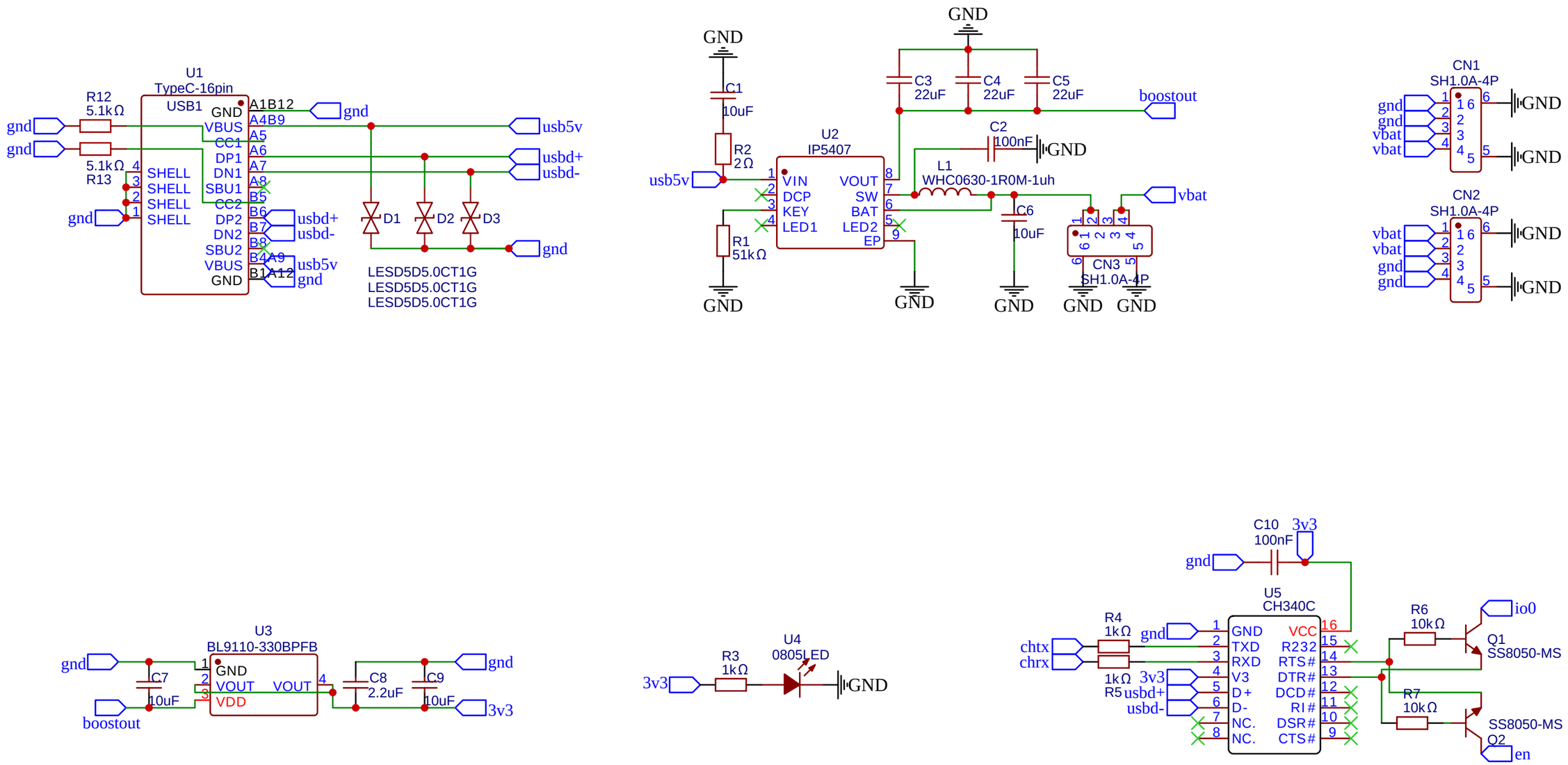

TITLE: Sheet_2	REV: 1.0
Company: gtwhhh	Sheet: 2/2
Date: 2023-03-05 Drawn By: gtwhhh	