FOURIER OPTICS

ARNAUD DUBOIS

September 2014

INTRODUCTION 2

Chapter 1: 5

REMINDER OF ELECTROMAGNETISM 5

1. ELECTROMAGNETIC THEORY 5

1.1 Maxwell's Equations in Free Space 5

1.2 The Wave Equation 5

1.3 Maxwell's Equations in a Medium 6

1.4 Intensity and Power 7

2. DIELECTRIC MEDIA 7

2.1 Linear, Homogeneous, and Isotropic Media 8

Chapter 2: INTRODUCTION TO WAVE OPTICS 10

1. POSTULATES OF WAVE OPTICS 10

2. MONOCHROMATIC WAVES 11

2.1 Complex Wavefunction 11

2.2 Complex Amplitude 11

2.3 The Helmholtz Equation 12

2.4 Optical Intensity 12

2.5 Wavefronts 12

3. ELEMENTARY WAVES 13

3.1 The Plane Wave 13

3.2 The Spherical Wave 14

3.4 Fresnel Approximation of the Spherical Wave; The Paraboloidal Wave 15

4. TRANSMISSION THROUGH OPTICAL COMPONENTS 17

4.1 Transparent Plate of constant thickness 17

4.2 Thin Transparent Plate of Varying Thickness 18

4.3 Thin Lens 18

Chapter 3: FOURIER OPTICS 22

1. INTRODUCTION 22

2. PROPAGATION OF LIGHT IN FREE SPACE 24

2.1 Correspondence Spatial Harmonic Function / Plane Wave 24

2.2 Transmission through optical components 25

2.3 Transfer function of free space 27

2.4 Impulse-response function of free space 30

2.5 Summary 31

3. OPTICAL FOURIER TRANSFORM 32

3.1 Amplitude in the far-field 32

3.2 Amplitude in the back focal plane of a lens 33

4. DIFFRACTION 36

4.1 Fresnel diffraction 36

4.2 Fraunhofer diffraction 38

5. SPATIAL FILTERING 40

6. Image formation 43

6.1 Impulse response function 44

6.2 Image formation with coherent illumination 45

6.3 Image formation with incoherent illumination 45

Chapter 4: COHERENCE .....**Erreur ! Signet non défini.**

1. Statistical properties of random light .....**Erreur ! Signet non défini.**

1.1 Optical intensity .....**Erreur ! Signet non défini.**

1.2 Temporal coherence and spectrum .....**Erreur ! Signet non défini.**

1.3 Spatial coherence .....**Erreur ! Signet non défini.**

1.4 Gain of spatial coherence by propagation: Zernike and Van Cittert theorem ..... **Erreur ! Signet non défini.**

2. Interference of partially coherent light .....**Erreur ! Signet non défini.**

2.1 Interference and temporal coherence .....**Erreur ! Signet non défini.**

2.2 Interference and spatial coherence.....**Erreur ! Signet non défini.**

References

1. **"**Fundamentals of Photonics**"** (Wiley Series in Pure and Applied Optics). Bahaa E. A. Saleh, Malvin Carl Teich. John Wiley & Sons, 1st edition (August 15, 1991)

2. "Introduction to Fourier Optics", J.W. Goodman (Stanford University). Second edition Mc Graw-Hill (1996)

3. "Principle of Optics", Born and Wolf (Pergamon Press 6th edition)

INTRODUCTION

Light is an electromagnetic wave phenomenon. Electromagnetic radiations are classified in different categories, depending on their frequency. Light occupies a limited region of the electromagnetic spectrum. The range of optical wavelengths contains three bands: ultraviolet (10 to 390 nm), visible (390 to 760 nm), and infrared (760 nm to 1 mm). The corresponding range of optical frequencies stretches from 3×10^{11} Hz to 3×10^{16} Hz.

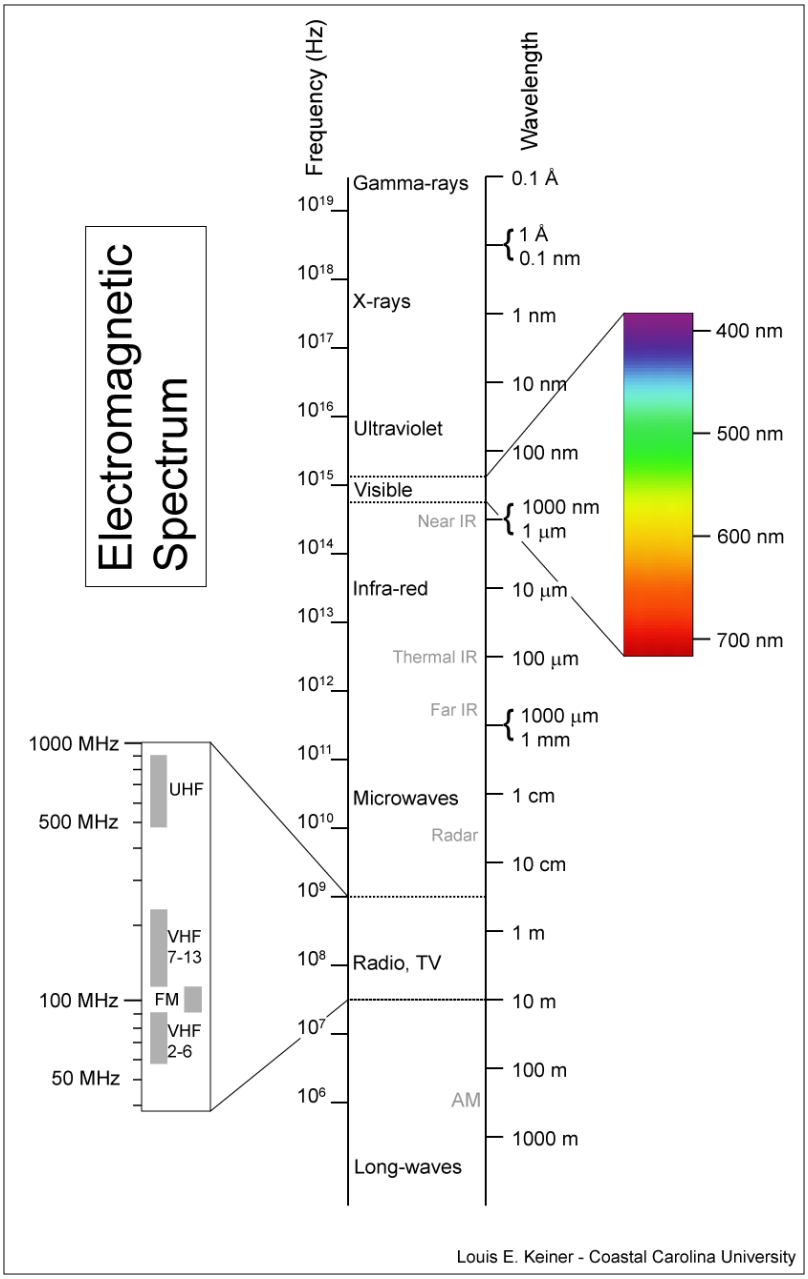

The spectrum of electromagnetic waves

Since light is an electromagnetic wave, light can be described by the same theoretical principles that govern all forms of electromagnetic radiation. Electromagnetic radiation propagates in the form of two coupled vector waves, an electric-field wave and a magnetic-field wave.

Although light is described by two wave vectors, it is possible to describe many optical phenomena using a scalar wave theory. In this theory, light is described by a single scalar wavefunction. This approximate way of treating light is called scalar wave optics, or simply wave optics.

When light waves propagate through and around objects whose dimensions are much greater than the wavelength, the wave nature of light is not discernable. In that case, the behaviour of light can be described by rays. This model of light, called ray optics, obeys a set of geometrical rules. Theoretically, ray optics is the limit of wave optics when the wavelength is zero. However, the wavelength needs not actually be equal to zero for the ray-optics theory to be useful. As long as the light waves propagate through and around objects whose dimensions are much greater than the wavelength, the ray theory suffices for describing most phenomena. Because the wavelength of visible light is much shorter than the dimensions of the visible objects encountered in our daily lives, manifestations of the wave nature of light are not apparent without careful observation.

Thus, the electromagnetic theory of light encompasses wave optics, which in turn, encompasses ray optics. Ray optics and wave optics provide approximate models of light which derive their validity from their successes in producing results that approximate those based on rigorous electromagnetic theory.

Although electromagnetic optics provides the most complete treatment of light within the confines of classical optics, there are certain optical phenomena that are characteristically quantum mechanical in nature and cannot be explained classically (spectrum of blackbody radiation, absorption and emission of light by matter at specific wavelengths, etc...). These phenomena are described by a quantum electromagnetic theory known as quantum electrodynamics. For optical phenomena, this theory is also referred to as quantum optics.

Historically, optical theory developed roughly in the following sequence: (1) ray optics; (2) wave optics; (3) electromagnetic optics; (4) quantum optics. Not surprisingly, these models are progressively more difficult and sophisticated, having being developed to provide explanations for the outcomes of successively more complex and precise optical experiments.

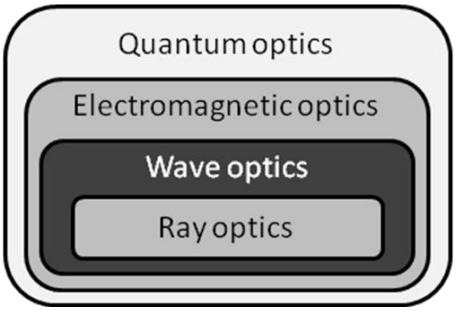

Theory of quantum optics provides an explanation of virtually all optical phenomena. The electromagnetic theory of light provides the most complete treatment of light within the confines of classical optics. Wave optics is a scalar approximation of electromagnetic optics. Ray optics is the limit of wave optics when the wavelength is very short.

Chapter 1:
REMINDER OF ELECTROMAGNETISM

An electromagnetic field is described by two vector fields: the electric field $\mathscr{E}(\mathbf{r},t)$ and the magnetic field $\mathscr{H}(\mathbf{r},t)$. These fields are vector functions of position and time. In general, six scalar functions of position and time are therefore required to describe light. Fortunately, these functions are related since they must satisfy a set of coupled partial differential equations known as Maxwell's equations.

1. ELECTROMAGNETIC THEORY

1.1 Maxwell's Equations in Free Space

The electric and magnetic fields in free space (vacuum) satisfy the following partial differential equations, known as Maxwell's equations:

$$\begin{cases} \nabla \times \mathscr{H} = \varepsilon_0 \dfrac{\partial \mathscr{E}}{\partial t} \\ \nabla \times \mathscr{E} = -\mu_0 \dfrac{\partial \mathscr{H}}{\partial t} \\ \nabla \cdot \mathscr{E} = 0 \\ \nabla \cdot \mathscr{H} = 0 \end{cases}$$

where the constants ε_0 = (1/36π) × 10^{-9} and μ_0 = 4π × 10^{-7} (MKS units) are the electric permittivity and the magnetic permeability of free space respectively. The symbols $\nabla\cdot$ and $\nabla\times$ represents the divergence and the curl operations.

1.2 The Wave Equation

From the Maxwell's equations, it is easy to establish that each component of $\mathscr{E}$ and $\mathscr{H}$ satisfies the wave equation*:

$$\nabla^2 u - \frac{1}{c_0^2}\frac{\partial^2 u}{\partial t^2} = 0,$$

where

* Apply the curl operation $\nabla\times$, using the vector identity $\nabla\times(\nabla\times\mathbf{A}) = \nabla(\nabla.\,\mathbf{A}) - \nabla^2\mathbf{A}$)

$$c_0 = \frac{1}{(\varepsilon_0 \mu_0)^{1/2}} \approx 3 \times 10^8 \text{ m/s}$$

is the speed of light. The speed of light is related to the electromagnetic constants ε_0 and μ_0. The scalar function u in the wave equation represents any of the three components ($\mathscr{E}_x$, $\mathscr{E}_y$, $\mathscr{E}_z$) of $\mathscr{E}$, or the three components ($\mathscr{H}_x$, $\mathscr{H}_y$, $\mathscr{H}_z$) of $\mathscr{H}$.

As will be seen in the next chapter, the wave equation is the basis of wave optics, which shows that wave optics is included in the structure of the electromagnetic theory.

1.3 Maxwell's Equations in a Medium

In a medium different from vacuum, in which there are no free electric charges or currents, two more vector fields need to be defined: the electric displacement, also called electric flux density $\mathscr{D}(\mathbf{r},t)$ and the magnetic flux density $\mathscr{B}(\mathbf{r},t)$. Maxwell's equations relate the four fields $\mathscr{E}$, $\mathscr{H}$, $\mathscr{D}$, and $\mathscr{B}$, by

$$\begin{cases} \nabla \times \mathscr{H} = \dfrac{\partial \mathscr{D}}{\partial t} \\ \nabla \times \mathscr{E} = -\dfrac{\partial \mathscr{B}}{\partial t} \\ \nabla \cdot \mathscr{D} = 0 \\ \nabla \cdot \mathscr{B} = 0 \end{cases}$$

The relation between the electric displacement $\mathscr{D}$ and the electric field $\mathscr{E}$ depends on the electric properties of the medium. Similarly, the relation between the magnetic flux density $\mathscr{B}$ and the magnetic field $\mathscr{H}$ depends on the magnetic properties of the medium. Two equations, called constitutive relations, help define these relations:

$$\begin{cases} \mathscr{D} = \varepsilon_0 \mathscr{E} + \mathscr{P} \\ \mathscr{B} = \mu_0 \mathscr{H} + \mu_0 \mathscr{M} \end{cases}$$

in which $\mathscr{P}$ is the polarization density and $\mathscr{M}$ is the magnetization density. In a dielectric medium, the polarization density is the macroscopic sum of the electric dipole moments that the electric field induces. The magnetization density is similarly defined.

The vector fields $\mathscr{P}$ and $\mathscr{M}$ are, in turn, related to the electric and magnetic fields $\mathscr{E}$ and $\mathscr{H}$ by relations that depend on the electric and magnetic properties of the medium, respectively. Once the medium is known, an equation relating $\mathscr{P}$ and $\mathscr{E}$, and another relating $\mathscr{M}$ and $\mathscr{H}$ are established. When substituted in Maxwell's equations, we are left with equations governing only the two vector fields $\mathscr{E}$ and $\mathscr{H}$.

In free space, $\mathscr{P} = \mathscr{M} = 0$, so that $\mathscr{D} = \varepsilon_0 \mathscr{E}$ and $\mathscr{B} = \mu_0 \mathscr{H}$; the free-space Maxwell's equations are then recovered.

In a nonmagnetic medium, $\mathscr{M}$ = 0. Throughout this course, unless otherwise stated, it is assumed that the medium is nonmagnetic ($\mathscr{M}$ = 0). We have then $\mathscr{B} = \mu_0 \mathscr{H}$.

In a dielectric medium, $\mathscr{M}$ = 0 but $\mathscr{P} \neq 0$.

1.4 Intensity and Power

The flow of electromagnetic power is governed by the **Poynting vector**, defined as

$$\Pi = \mathscr{E} \times \mathscr{H}$$

The direction of power flow is along the direction of the Poynting vector. It is orthogonal to both $\mathscr{E}$ and $\mathscr{H}$. The direction of the Poynting vector The optical intensity (power flow across a unit area normal to the vector Π) is the magnitude of the time-averaged Poynting vector.

The direction of the Poynting vector can be regarded as a ray of light, as used in the description of light by the ray optic theory.

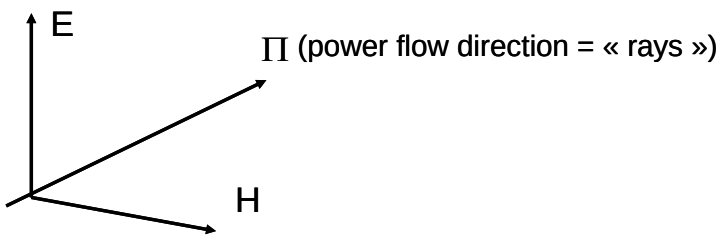

2. DIELECTRIC MEDIA

The media in which light propagates are usually dielectric media (glass, crystals, plastics, water, air...).

The nature of the dielectric medium is exhibited in the relation between the polarization density $\mathscr{P}$ and the electric field $\mathscr{E}$, called the medium equation.

<u>Definitions</u>

- A dielectric medium is said to be <u>linear</u> if the vector field $\mathscr{P}(\mathbf{r},t)$ is linearly related to the vector field $\mathscr{E}(\mathbf{r},t)$.

- A dielectric medium is said to be <u>homogeneous</u> if the relation between $\mathscr{P}$ and $\mathscr{E}$ is independent of the position $\mathbf{r}$.

- A dielectric medium is called <u>isotropic</u> if the relation between the vectors $\mathscr{P}$ and $\mathscr{E}$ is independent of the direction of the vector $\mathscr{E}$, so that the medium looks the same from all directions. The vectors $\mathscr{P}$ and $\mathscr{E}$ must then be parallel.

2.1 Linear, Homogeneous, and Isotropic Media

Let us consider the case of linear, homogeneous, and isotropic media (glass, water, air, but not crystals). The vectors $\mathscr{P}$ and $\mathscr{E}$ at any position and time are parallel and proportional, so that

$$\mathscr{P} = \varepsilon_0 \chi \mathscr{E}$$

where χ is a scalar constant called the electric susceptibility.

It follows that $\mathscr{D}$ and $\mathscr{E}$ are also parallel and proportional,

$$\mathscr{D} = \varepsilon \mathscr{E}$$

where

$$\varepsilon = \varepsilon_0 (1 + \chi)$$

is another scalar constant, the electric permittivity of the medium. The ratio $\varepsilon / \varepsilon_0$ is the dielectric constant.

Under these conditions, Maxwell's equations simplify to

$$\begin{cases} \nabla \times \mathscr{H} = \varepsilon \dfrac{\partial \mathscr{E}}{\partial t} \\ \nabla \times \mathscr{E} = -\mu_0 \dfrac{\partial \mathscr{H}}{\partial t} \\ \nabla \cdot \mathscr{E} = 0 \\ \nabla \cdot \mathscr{H} = 0 \end{cases}$$

We are now left with two related vector fields, $\mathscr{E}(\mathbf{r},t)$ and $\mathscr{H}(\mathbf{r},t)$ that satisfy equations identical to Maxwell's equations in free space with ε_0, replaced by ε. Each of the components of $\mathscr{E}$ and $\mathscr{H}$ therefore satisfies the wave equation

$$\nabla^2 u - \frac{1}{c^2} \frac{\partial^2 u}{\partial t^2} = 0 ,$$

with a speed $c = 1/(\varepsilon_0 \mu_0)^{1/2}$. The different components of the electric and magnetic fields propagate in the form of waves of speed

$$c = \frac{c_0}{n} ,$$

where

$$n = \left(\frac{\varepsilon}{\varepsilon_0} \right)^{1/2} = \left(1 + \chi\right)^{1/2} ,$$

and

$$c_0 = \frac{1}{\left(\varepsilon_0 \mu_0\right)^{1/2}}$$

is the speed of light in free space. The constant n is the ratio of the speed of light in free space to that in the medium. It represents the refractive index of the medium.

Chapter 2: INTRODUCTION TO WAVE OPTICS

Wave optics is a scalar approximation of electromagnetic optics. The vectorial nature of light is therefore ignored in the wave optics theory. Wave optics can be used for describing many optical phenomena that cannot be described by ray optics, including interference and diffraction. However, wave optics cannot describe optical phenomena that require a vector formulation, such as polarization effects. The wave optics theory is also not capable of providing a complete picture of reflection and refraction of light at the boundaries between dielectric materials.

1. POSTULATES OF WAVE OPTICS

The theory of wave optics can be built from a set of postulates. These postulates can be justified by the electromagnetic theory of light (see previous chapter):

- Light propagates in the form of waves.

- In free space, light waves travel with speed c_0.

- A homogeneous transparent medium (such as glass) is characterized by a single constant, its refractive index $n\ (\geq 1)$. In a medium of refractive index n, light waves travel with a reduced speed $c = c_0 / n$.

- An optical wave is described mathematically by a real function of position $\mathbf{r} = (x, y, z)$ and time t, denoted $u(\mathbf{r}, t)$ and known as the **wavefunction**. It satisfies the wave equation:

$$\nabla^2 u - \frac{1}{c^2}\frac{\partial^2 u}{\partial t^2} = 0$$

where ∇^2 is the Laplacian operator. It is a scalar differential operator. In Cartesian coordinates, it is defined as $\nabla^2 u = \frac{\partial^2 u}{\partial x^2} + \frac{\partial^2 u}{\partial y^2} + \frac{\partial^2 u}{\partial z^2}$.

Any function satisfying the wave equation represents a possible optical wave.

Because the wave equation is linear, the **principle of superposition** applies; i.e., if $u_1(\mathbf{r}, t)$ and $u_2(\mathbf{r}, t)$ represent optical waves, then $u(\mathbf{r}, t) = u_1(\mathbf{r}, t) + u_2(\mathbf{r}, t)$ also represents a possible optical wave.

The wave equation is approximately applicable to media with position-dependent refractive indices, provided that the variation is slow within distances of a wavelength. The medium is then said to be locally homogeneous. For such media, n and c are simply replaced by position-dependent functions $n(\mathbf{r})$ and $c(\mathbf{r})$, respectively.

2. MONOCHROMATIC WAVES

In the wave optics theory, a monochromatic wave is represented by a wavefunction with harmonic time dependence,

$$u(\mathbf{r},t) = a(\mathbf{r})\cos\left[2\pi\nu t + \varphi(\mathbf{r})\right],$$

where

$a(\mathbf{r})$ = amplitude $\qquad$ $\varphi(\mathbf{r})$ = phase

ν = frequency (cycles/s or Hz) $\qquad$ ω = $2\pi\nu$ = angular frequency (radians/s).

Both the amplitude and the phase are generally position dependent, but the wavefunction is a harmonic function of time with frequency ν at all positions. As seen in the introduction, the frequency of optical waves lies in the range 3×10^{11} to 3×10^{16} Hz.

2.1 Complex Wavefunction

It is usual and convenient to represent the real wavefunction $u(\mathbf{r},t)$ in terms of a complex function

$$U(\mathbf{r},t) = a(\mathbf{r})\exp\left[j\varphi(\mathbf{r})\right]\exp(j2\pi\nu t),$$

so that

$$u(\mathbf{r},t) = \mathrm{Re}\{U(\mathbf{r},t)\} = 1/2\left[U(\mathbf{r},t) + U^*(\mathbf{r},t)\right].$$

The function $U(\mathbf{r},t)$, known as the **complex wavefunction**, describes the wave completely; the wavefunction $u(\mathbf{r},t)$ is simply its real part. Like the wavefunction $u(\mathbf{r},t)$, the complex wavefunction $U(\mathbf{r},t)$ must also satisfy the wave equation

$$\nabla^2 U - \frac{1}{c^2}\frac{\partial^2 U}{\partial t^2} = 0.$$

2.2 Complex Amplitude

The complex wavefunction can be written in the form

$$U(\mathbf{r},t) = U(\mathbf{r})\exp(j2\pi\nu t),$$

where the time-independent factor $U(\mathbf{r}) = a(\mathbf{r})\exp\left[j\varphi(\mathbf{r})\right]$ is referred to as the **complex amplitude**. The wavefunction $u(\mathbf{r},t)$ is therefore related to the complex amplitude by

$$u(\mathbf{r},t) = \mathrm{Re}\left\{U(\mathbf{r})\exp(j2\pi\nu t)\right\}$$

At a given position $\mathbf{r}$, the complex amplitude $U(\mathbf{r})$ is a complex variable whose magnitude $|U(\mathbf{r})| = a(\mathbf{r})$ is the amplitude of the wave and whose argument $\arg\{U(\mathbf{r})\} = \varphi(\mathbf{r})$ is the phase.

2.3 The Helmholtz Equation

The monochromatic wave must satisfy the wave equation. Substituting $U(\mathbf{r},t) = U(\mathbf{r})\exp(j2\pi\nu t)$ into the wave equation, we obtain the differential equation

$$\left(\nabla^2 + k^2\right)U(\mathbf{r}) = 0$$

called the **Helmholtz equation**, where

$$k = 2\pi\nu / c = \omega / c$$

is referred to as the **wavenumber**.

2.4 Optical Intensity

The optical intensity of a monochromatic ware is defined as the absolute square of its complex amplitude

$$I(r) = |U(\mathbf{r})|^2$$

The intensity of a monochromatic wave does not vary with time.

2.5 Wavefronts

The wavefronts are the **surfaces of equal phase**, $\varphi(\mathbf{r})$ = constant. The constants are often taken to be multiples of 2π, $\varphi(\mathbf{r}) = 2\pi q$, where q is an integer.

Summary

• A monochromatic wave of frequency ν is described by a complex wavefunction $U(\mathbf{r},t) = U(\mathbf{r})\exp(j2\pi\nu t)$, which satisfies the wave equation.

• The complex amplitude $U(\mathbf{r})$ satisfies the Helmholtz equation; its magnitude $|U(\mathbf{r})|$ and argument $\arg\{U(\mathbf{r})\}$ are the amplitude and phase of the wave, respectively. The optical intensity is $I(r) = |U(\mathbf{r})|^2$. The wavefronts are the surfaces of constant phase, $\varphi(\mathbf{r}) = \arg\{U(\mathbf{r})\} = 2\pi q$ (q = integer).

• The wavefunction $u(\mathbf{r},t)$ is the real part of the complex wavefunction, $u(\mathbf{r},t) = \mathrm{Re}\{U(\mathbf{r},t)\}$. The wavefunction also satisfies the wave equation.

3. ELEMENTARY WAVES

We consider here two special monochromatic waves: the **plane wave** and the **spherical wave.** These waves are the simplest solutions to the Helmholtz equation in a homogeneous medium.

3.1 The Plane Wave

The plane wave has a complex amplitude

$$U(\mathbf{r}) = A\exp(-j\mathbf{k}.\mathbf{r}) = A\exp\left[-j\left(k_x x + k_y y + k_z z\right)\right],$$

where A is a constant called the **complex envelope,** and $\mathbf{k} = (k_x, k_y, k_z)$ is called the **wavevector**.

For the plane wave to satisfy the Helmholtz equation, $k_x^2 + k_y^2 + k_z^2 = k^2$, so that <u>the magnitude of the wavevector $\mathbf{k}$ is the wavenumber k.</u>

Since the phase $\arg\{U(\mathbf{r})\} = \arg\{A\} - \mathbf{k}\cdot\mathbf{r}$, the wavefronts obey $\mathbf{k}\cdot\mathbf{r} = k_x x + k_y y + k_z z = 2\pi q + \arg\{A\}$ (q = integer). This is the equation describing parallel planes perpendicular to the wavevector $\mathbf{k}$ (hence the name "plane wave"). These planes are separated by a distance $\lambda = 2\pi/k$, so that

$$\lambda = c/\nu$$

where λ is called the **wavelength**.

The plane wave has a constant intensity $I(r)=|A|^2$ everywhere in space so that it carries infinite power. This wave is clearly an idealization since it exists everywhere and at all times.

If the z axis is taken in the direction of the wavevector $\mathbf{k}$, then $U(r)=A\exp(-jkz)$ and the corresponding wavefunction is

$$u(\mathbf{r},t)=|A|\cos\left[2\pi\nu t-kz+\arg\{A\}\right]=|A|\cos\left[2\pi\nu(t-z/c)+\arg\{A\}\right]$$

The wavefunction is therefore periodic in time with period $1/\nu$, and periodic in space with period $2\pi/k$, which is equal to the wavelength λ. Since the phase of the complex wavefunction, $\arg\{U(\mathbf{r},t)\}=2\pi\nu(t-z/c)+\arg\{A\}$, varies with time and position as a function of the variable $(t-z/c)$ (see Fig), c is called the phase velocity of the wave. $u(z,t)$

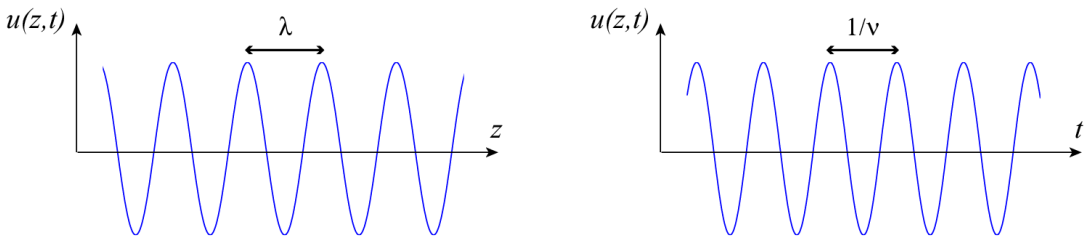

A plane wave travelling in the z direction is a periodic function of z with spatial period λ and a periodic function of t with temporal period 1/ν.

In a medium of refractive index n :

- the phase velocity is $c=c_0/n$
- the wavelength is $\lambda=c/\nu=c_0/n\nu$, so that $\lambda=\lambda_0/n$ where $\lambda_0=c_0/\nu$ is the wavelength in free space. For a given frequency ν, the wavelength in the medium is reduced relative to that in free space by the factor n.
- as a consequence, the wavenumber $k=2\pi/\lambda$ increases relative to that in free space ($k_0=2\pi/\lambda_0$) by the factor n.

In summary: as a monochromatic wave propagates through media of different refractive indices its frequency remains the same, but its velocity, wavelength, and wavenumber are modified.

3.2 The Spherical Wave

Another simple solution of the Helmholtz equation is the spherical wave. The complex amplitude of a spherical wave is

$$U(\mathbf{r})=(A/r)\exp(-jkr)$$

where *r* is the distance from the origin and $k = 2\pi\nu / c = \omega / c$ is the wavenumber.

The intensity of a spherical wave, $I(\mathbf{r}) = |A|^2 / r^2$, is inversely proportional to the square of the distance. Taking $\arg\{A\} = 0$ for simplicity, the wavefronts are the surfaces $kr = 2\pi q$ or $r = q\lambda$, where *q* is an integer. These are concentric spheres separated by a radial distance $\lambda = 2\pi / k$ that advance radially at the phase velocity *c* (see Figure).

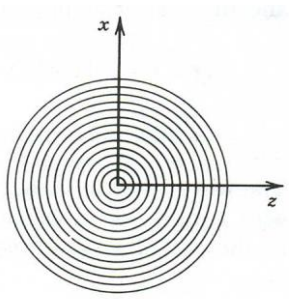

Cross section of the wavefronts of a spherical wave

A spherical wave originating at the position $\mathbf{r}_0$ has a complex amplitude $U(\mathbf{r}) = (A/|\mathbf{r} - \mathbf{r}_0|)\exp(-jk|\mathbf{r} - \mathbf{r}_0|)$. Its wavefronts are spheres centered about $\mathbf{r}_0$.

Note that a wave with complex amplitude $U(\mathbf{r}) = (A/r)\exp(+jkr)$ is a spherical wave traveling toward the origin instead of away from the origin.

3.4 Fresnel Approximation of the Spherical Wave; The Paraboloidal Wave

Let us consider a spherical wave at points $\mathbf{r} = (x, y, z)$ sufficiently close to the z axis but far from the origin, so that $(x^2 + y^2)^{1/2} \ll z$.

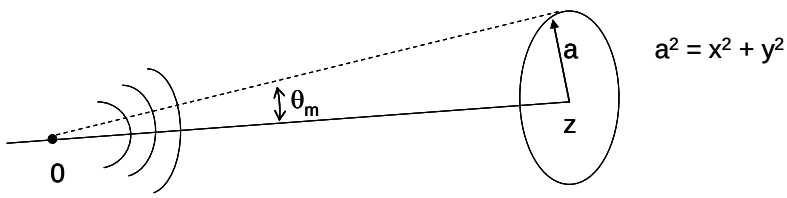

We note $\theta^2 = (x^2 + y^2)/z^2$. By using an approximation based on the Taylor series expansion:

$$r = (x^2 + y^2 + z^2)^{1/2} = z(1 + \theta^2)^{1/2}$$
$$= z\left(1 + \frac{\theta^2}{2} + \frac{\theta^4}{8} + \ldots\right) \approx z\left(1 + \frac{\theta^2}{2}\right) = z + \frac{x^2 + y^2}{2z}$$

Substituting $r = z + \dfrac{x^2 + y^2}{2z}$ into the phase, and $r = z$ into the magnitude of $U(r)$, we obtain

$$\boxed{U(r) \approx \frac{A}{z}\exp(-jkz)\exp\left(-jk\frac{x^2+y^2}{2z}\right)}$$

A more accurate value of *r* was used in the phase since the sensitivity to errors of the phase is greater.

This is called the **Fresnel approximation**. This approximation plays an important role in simplifying the theory of transmission of optical waves through apertures (theory of diffraction).

With the Fresnel approximation, the complex amplitude of a spherical wave may be viewed as representing a plane wave $A\exp(-jkz)$ modulated by the factor $\left(\frac{1}{z}\right)\exp\left(-jk\frac{x^2+y^2}{2z}\right)$, which involves a phase $k\left(\frac{x^2+y^2}{2z}\right)$. This phase factor serves to bend the planar wavefronts of the plane wave into paraboloidal surfaces (see Fig.), since the equation of a paraboloid of revolution is $\frac{x^2+y^2}{z}$ = constant. Thus the spherical wave is approximated by a **paraboloidal wave**. When *z* becomes very large, the phase approaches kz and the magnitude varies slowly with z, so that the spherical wave eventually resembles the plane wave $\exp(-jkz)$, as illustrated below.

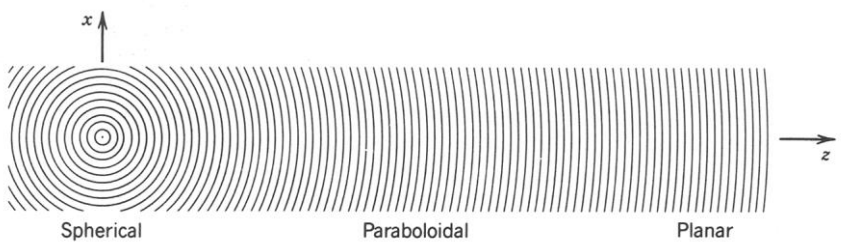

A spherical wave can be approximated at points near the z axis and sufficiently far from the origin by a paraboloidal wave. For very far points, the spherical wave approaches the plane wave.

The condition of validity of the Fresnel approximation is not simply that $\theta^2/2 \ll 1$. Although the third term of the series expansion, $\theta^4/8$ may be very small in comparison with the second and first terms, when multiplied by kz it may become comparable to π. The approximation is therefore valid when $kz\theta^4/8 \ll \pi$, or $\left(x^2+y^2\right)^2 \ll 4z^3\lambda$. For points (x,y) lying within a circle of radius a centered about the z axis, the validity condition is $a^4 \ll 4z^3\lambda$ or

$$\boxed{\frac{N_F\theta_m{}^2}{4} \ll 1}$$

where $\theta_m = a/z$ is the maximum angle and

$$\boxed{N_F = \frac{a^2}{\lambda z}}$$

is known as the **Fresnel number**.

EXERCISE 1: Validity of the Fresnel Approximation.

Determine the radius of a circle within which a spherical wave of wavelength λ = 633 nm, originating at a distance 1 m away, may be approximated by a paraboloidal wave. Determine the maximum angle θ_m and the Fresnel number N_F.

4. TRANSMISSION THROUGH OPTICAL COMPONENTS

We now proceed to examine the transmission of optical waves through transparent optical components such as **plates** and **lenses**. The effect of **reflection** at the surfaces of these components will be ignored, since it cannot be properly described using the scalar wave optics model of light. The effect of **absorption** in the material is also ignored. The main emphasis here is on the phase shift introduced by these components and on the associated wavefront bending.

4.1 Transparent Plate of constant thickness

Consider first the transmission of a plane wave through a transparent plate of refractive index *n* and thickness *d* surrounded by free space. The surfaces of the plate are the planes *z* = 0 and *z* = d and the incident wave travels in the *z* direction. Let $U(x,y,z)$ be the complex amplitude of the wave. Since external and internal reflections are ignored, $U(x,y,z)$ is assumed to be continuous at the boundaries. The ratio $t(x,y) = U(x,y,d)/U(x,y,0)$ therefore represents the **complex amplitude transmittance** of the plate. The incident plane wave continues to propagate inside the plate as a plane wave with wavenumber nk_0, so that $U(x,y,z)$ is proportional to $\exp(-jnk_0 d)$. Thus $U(x,y,d)/U(x,y,0) = \exp(-jnk_0 d)$, so that

$$t(x,y) = \exp(-jnk_0 d)$$

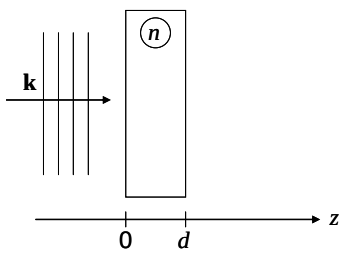

i.e., the plate introduces a phase shift $nk_0 d = 2\pi(d/\lambda)$.

4.2 Thin Transparent Plate of Varying Thickness

We consider now a thin transparent plate whose thickness $d(x,y)$ varies smoothly as a function of x and y. The incident wave is a paraxial wave. The plate lies between the planes $z = 0$ and $z = d_0$, which are regarded as the boundaries of the optical component.

The wave crosses a thin plate of width $d(x,y)$ surrounded by thin layers of air of total width $d_0 - d(x,y)$. The local transmittance is the product of the transmittances of a thin layer of air of thickness $d_0 - d(x,y)$ and a thin layer of material of thickness $d(x,y)$ so that $t(x,y) = \exp[-jnk_0 d(x,y)]\exp\{-jk_0[d_0 - d(x,y)]\}$, from which

$$\boxed{t(x,y) = h_0 \exp\left[-j(n-1)k_0 d(x,y)\right]}$$

where $h_0 = \exp[-jk_0 d_0]$ is a <u>constant</u> phase factor. This relation is valid in the paraxial approximation (all angles θ are small) and when the thickness d_0 is sufficiently small.

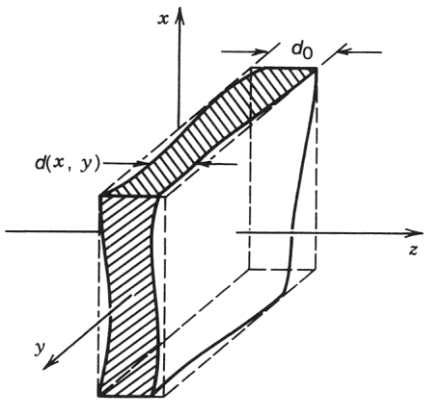

A transparent plate of varying thickness.

4.3 Thin Lens

The general expression for the complex amplitude transmittance of a thin transparent plate of variable thickness is now applied to the plano-convex thin lens.

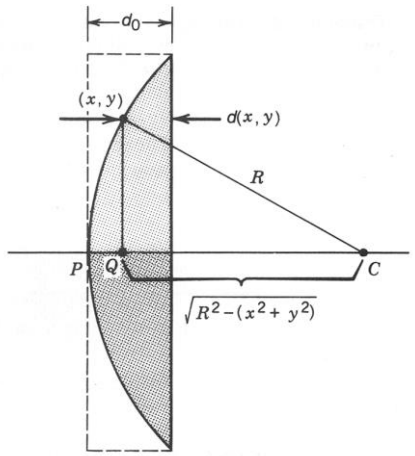

Since the lens is the cap of a sphere of radius *R*, the thickness at the point (x, y) is $d(x, y)$ = d_0 - PQ= d_0 - (R – QC) or

$$d(x,y) = d_0 - \left\{ R - \left[R^2 - \left(x^2 + y^2 \right) \right]^{1/2} \right\}$$

This expression can be simplified by considering only points for which *x* and *y* are sufficiently small in comparison with *R*, so that $x^2 + y^2 \ll R^2$. In that case

$$\left[R^2 - \left(x^2 + y^2 \right) \right]^{1/2} = R\left(1 - \frac{x^2 + y^2}{R^2} \right)^{1/2} \approx R\left(1 - \frac{x^2 + y^2}{2R^2} \right)$$

and

$$d(x,y) \approx d_0 - \frac{x^2 + y^2}{2R}$$

We obtain then

$$t(x,y) \approx h_0 \exp\left(jk_0 \frac{x^2 + y^2}{2f} \right)$$

where

$$f = \frac{R}{n-1}$$

is the <u>focal length</u> of the lens and $h_0 = \exp\left[-jnk_0 d_0 \right]$ is a <u>constant</u> phase factor that is usually of no significance.

The lens imparts to the incident wave a phase proportional to $x^2 + y^2$: it bends the planar wavefronts of a plane wave, transforming it into a <u>paraboloidal wave centered at a distance *f* from the lens.</u>

Double-Convex Lens: the complex amplitude transmittance of the double-convex lens is given by

$$t(x,y) \approx \exp\left(jk_0(n-1)\frac{x^2+y^2}{2R_1} \right) \times \exp\left(jk_0(n-1)\frac{x^2+y^2}{-2R_2} \right)$$

$$t(x,y) \approx h_0 \exp\left(jk_0 \frac{x^2+y^2}{2f} \right) \quad \text{with} \quad \frac{1}{f} = (n-1)\left(\frac{1}{R_1} - \frac{1}{R_2} \right)$$

Recall that, by convention, the radius of a convex/concave surface is positive/negative, i.e., R_1 is positive and R_2 is negative for the lens in Figure. The parameter f is recognized as the focal length of the lens.

General case: In the Fresnel approximation, the transmittance of a thin lens can be simply written:

$$\boxed{t(x,y) = \exp\left(jk_0 \frac{x^2+y^2}{2f} \right)}$$

where f is the focal length of the lens. A lens is therefore characterized by its focal length only, regardless of its geometrical shape.

EXERCISE 2: Focusing of a plane wave by a thin lens.

Show that when a plane wave is transmitted through a thin lens of focal length f in a direction parallel to the axis of the lens, it is converted into a paraboloidal wave (the Fresnel approximation of a spherical wave) centered about a point at a distance f from the lens.

EXERCISE 3: Imaging property of a Lens.

We consider a point source P_1 emitting a paraboloidal wave. What is the wave just after the lens of focal length f ? Where is the image point P_2 ? Check the Descartes's law of Ray Optics.

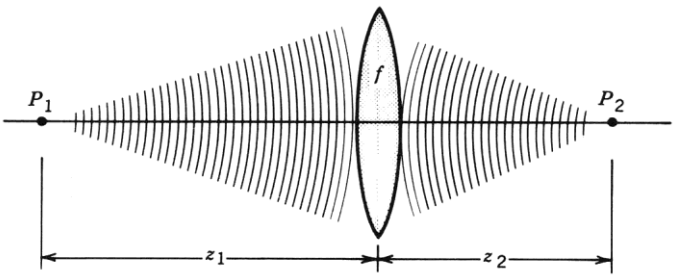

EXERCISE 4: Show that a thin plate of uniform thickness d_0 and quadratically graded refractive index $n(x,y) = n_0\left[1 - \frac{1}{2}\alpha^2\left(x^2 + y^2\right)\right]$, where $\alpha d_0 \ll 1$, acts as a converging lens. Express the focal length f.

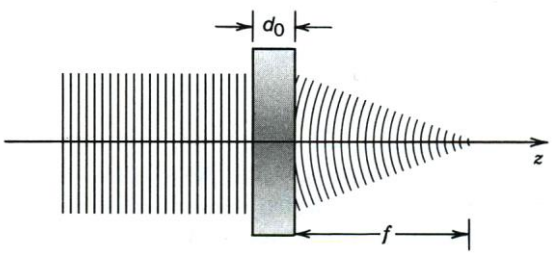

Chapter 3: FOURIER OPTICS

1. INTRODUCTION

Fourier optics provides a description of the propagation of light waves based on **harmonic analysis** and **linear systems**.

Harmonic analysis is based on the expansion of an arbitrary function of time as a sum of harmonic functions of time of different frequencies and different amplitudes:

$$f(t) = \int_{-\infty}^{+\infty} \tilde{f}(\nu) \exp(-j2\pi\nu t)\, d\nu$$

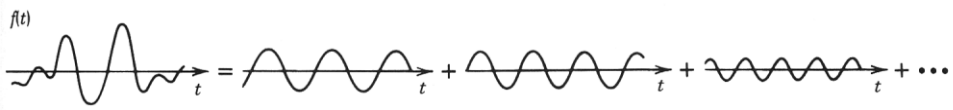

An arbitrary function $f(t)$ can be analyzed as a sum of harmonic functions of different frequencies and complex amplitudes.

The function $\tilde{f}(\nu)\exp(-j2\pi\nu t)$ is a harmonic function with frequency ν and complex amplitude $\tilde{f}(\nu)$.

The complex amplitude $\tilde{f}(\nu)$, as a function of frequency, is called the Fourier transform of $f(t)$:

$$\tilde{f}(\nu) = \int_{-\infty}^{+\infty} f(t) \exp(j2\pi\nu t)\, dt$$

This approach is useful for the description of **linear** systems. If the response of the system to each harmonic function is known, the response to an arbitrary input function can be determined (principle of superposition).

The response of a linear system can therefore be determined by the use of harmonic analysis at the input and superposition at the output.

Consider now an arbitrary function $f(x,y)$ of the two variables x and y. We suppose that x and y represent the spatial coordinates in a plane. $f(x,y)$ can also be written as a sum of harmonic functions of x and y:

$$f(x,y)=\iint \tilde{f}(\nu_x,\nu_y)\exp\left[-j2\pi\left(\nu_x x+\nu_y y\right)\right]d\nu_x d\nu_y$$

$\tilde{f}(\nu_x,\nu_y)$ is the complex amplitude of the harmonic functions, ν_x and ν_y are the spatial frequencies in the x and y directions, respectively.

The harmonic function $\tilde{f}(\nu_x,\nu_y)\exp\left[-j2\pi\left(\nu_x x+\nu_y y\right)\right]$ is the building block of the Fourier Optics theory. It can be used to generate an arbitrary function of two variables $f(x,y)$, as illustrated below. The weights $\tilde{f}(\nu_x,\nu_y)$ of the different harmonic functions are determined by use of the <u>two-dimensional Fourier transform</u>

$$\tilde{f}(\nu_x,\nu_y)=\iint f(x,y)\exp\left[j2\pi\left(\nu_x x+\nu_y y\right)\right]dxdy$$

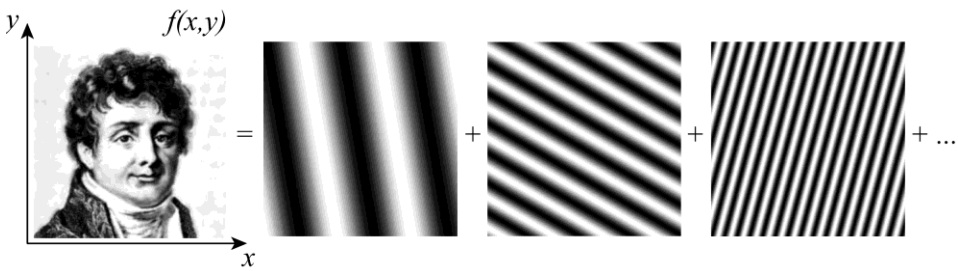

An arbitrary function $f(x,y)$ can be analyzed as a sum of harmonic functions of different frequencies and complex amplitudes.

Consider a plane wave $U(x,y,z)=A\exp\left[-j\left(k_x x+k_y y+k_z z\right)\right]$. In an arbitrary plane *z*, $U(x,y,z)$ is a harmonic function. In the *z* = 0 plane, for example, $U(x,y,0)$ is the harmonic function $A\exp\left[-j2\pi\left(\nu_x x+\nu_y y\right)\right]$ where $\nu_x=k_x/2\pi$ and $\nu_y=k_y/2\pi$ are the spatial frequencies.

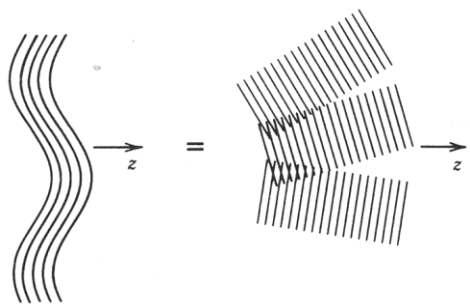

Principle of Fourier optics: an arbitrary wave can be analyzed as a superposition of planes waves.

Since an arbitrary function $f(x,y)$ can be analyzed as a sum of harmonic functions, **an arbitrary optical wave $U(x,y,z)$ may be analyzed as a sum of plane waves**.

If it is known how a linear optical system modifies plane waves, the principle of superposition can be used to determine the effect of the system on an arbitrary wave.

It is therefore useful to describe the propagation of light through linear optical components, including free space (free space is a linear system because the wave equation is linear). The complex amplitudes in two planes normal to the optic (*z*) axis are regarded as the input and output of the system.

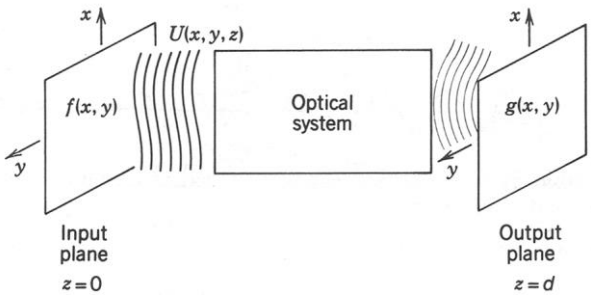

The transmission of an optical wave $U(x,y,z)$ through an optical system between an input plane *z* = 0 and an output plane *z* = *d*. This is regarded as a linear system whose input and output are the functions $f(x,y)=U(x,y,0)$ and $g(x,y)=U(x,y,d)$, respectively.

2. PROPAGATION OF LIGHT IN FREE SPACE

2.1 Correspondence Spatial Harmonic Function / Plane Wave

Consider a plane wave of complex amplitude $U(x,y,z)=A\exp\left[-j\left(k_x x+k_y y+k_z z\right)\right]$ with wavevector $\mathbf{k}=\left(k_x,k_y,k_z\right)$, wavelength λ, wavenumber $\mathbf{k}=\left(k_x^2+k_y^2+k_z^2\right)^{1/2}=2\pi/\lambda$, and complex envelope *A*. The vector $\mathbf{k}$ makes angles $\theta_x=\sin^{-1}\left(k_x/k\right)$ and $\theta_y=\sin^{-1}\left(k_y/k\right)$ with the *y*-*z* and *x*-*z* planes, respectively, as illustrated below.

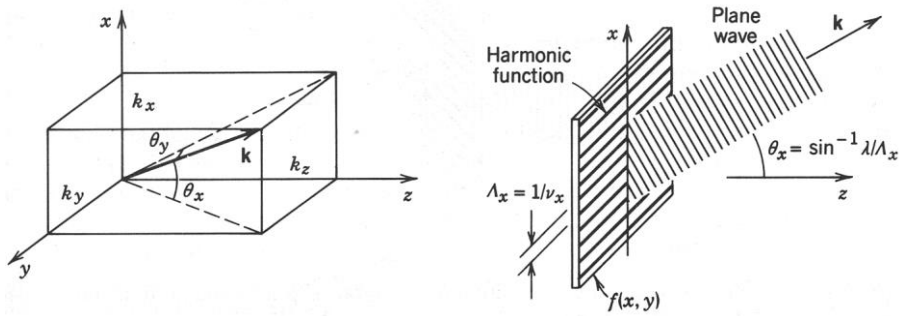

The complex amplitude in the $z = 0$ plane, $U(x,y,0)$, is a spatial harmonic function $f(x,y) = A\exp\left[-j2\pi\left(\nu_x x + \nu_y y\right)\right]$ with spatial frequencies $\nu_x = k_x/2\pi$ and $\nu_y = k_y/2\pi$ (cycles/mm). The angles of the wavevector are therefore related to the spatial frequencies of the harmonic function by

$$\theta_x = \sin^{-1}\lambda\nu_x$$
$$\theta_y = \sin^{-1}\lambda\nu_y$$

$\Lambda_x = 1/\nu_x$ and $\Lambda_y = 1/\nu_y$ are the periods of the harmonic function in the x and y directions. We see that the angles $\theta_x = \sin^{-1}\left(\lambda/\Lambda_x\right)$ and $\theta_y = \sin^{-1}\left(\lambda/\Lambda_y\right)$ are governed by the ratios of the wavelength of light to the period of the harmonic function in each direction. **The wavefronts of the wave match to the periodic pattern of the harmonic function in the *z* = 0 plane**.

If $k_x << k$ and $k_y << k$, so that the wavevector $\mathbf{k}$ is paraxial, the angles θ_x, and θ_y are small and

$$\theta_x \approx \lambda\nu_x$$
$$\theta_y \approx \lambda\nu_y$$

Thus the angles of inclination of the wavevector are directly proportional to the spatial frequencies of the corresponding harmonic function.

2.2 Transmission through optical components

Consider a thin optical element with complex amplitude transmittance $f(x,y) = \exp\left[-j2\pi\left(\nu_x x + \nu_y y\right)\right]$. When a plane wave of unity amplitude traveling in the z direction is transmitted through this optical element, the wave is modulated by the harmonic function, so that $U(x,y,0) = f(x,y)$. The incident wave is then converted into a plane wave with a wavevector at angles $\theta_x = \sin^{-1}\lambda\nu_x$, and $\theta_y = \sin^{-1}\lambda\nu_y$ (see Figure). The optical element is a <u>diffraction grating</u> which acts like a prism.

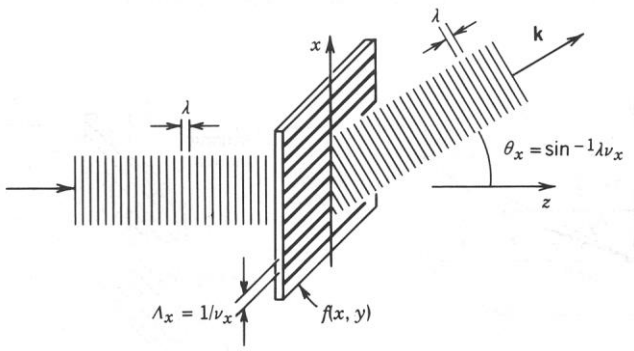

An arbitrary transmittance of an optical element $f(x,y)$ can be decomposed as a sum of several harmonic functions of different spatial frequencies. The transmitted optical wave is therefore also the sum of plane waves dispersed into different directions; each spatial frequency is mapped into a corresponding direction. The amplitude of each wave is proportional to the amplitude of the corresponding harmonic component of $f(x,y)$.

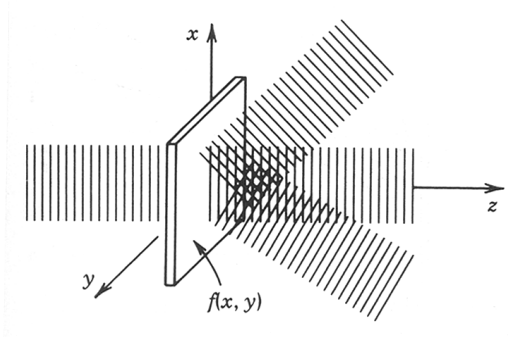

A thin optical element of amplitude transmittance $f(x, y)$ decomposes an incident plane wave into many plane waves. The plane wave traveling at the angles $\theta_x = \sin^{-1} \lambda\nu_x$ and $\theta_y = \sin^{-1} \lambda\nu_y$ has a complex envelope $F(\nu_x, \nu_y)$, the Fourier transform of $f(x, y)$.

More generally, if $f(x,y)$ is a superposition integral of harmonic functions,

$$f(x,y) = \iint F(\nu_x,\nu_y)\exp\left[-j2\pi\left(\nu_x x + \nu_y y\right)\right]d\nu_x d\nu_y$$

with frequencies (ν_x,ν_y) and amplitudes $F(\nu_x,\nu_y)$, the transmitted wave $U(x,y,z)$ is the superposition of plane waves,

$$U(x,y,z) = \iint F(\nu_x,\nu_y)\exp\left[-j2\pi\left(\nu_x x + \nu_y y\right)\right]\exp\left(-jk_z z\right)d\nu_x d\nu_y$$

with complex envelopes $F(\nu_x,\nu_y)$, where $k_z = \left(k^2 - k_x^{\ 2} - k_y^{\ 2}\right)^{1/2} = 2\pi\left(1/\lambda^2 - \nu_x^{\ 2} - \nu_y^{\ 2}\right)^{1/2}$. Note that $F(\nu_x,\nu_y)$ is the Fourier transform of $f(x,y)$.

Since an arbitrary function may be Fourier analyzed as a superposition integral, **the light transmitted through an optical element of arbitrary transmittance may be written as a superposition of plane waves, provided that** $\nu_x^{\ 2} + \nu_y^{\ 2} \le \dfrac{1}{\lambda^2}$.

EXERCICE 5: Diffraction grating

Consider a diffraction grating with a sinusoidal amplitude transmittance : $t(x,y) = \dfrac{1}{2}\left[1 + \cos\left(2\pi x/p\right)\right]$.

Show that an incident plane wave (normal incidence) of wavelength λ is converted into 3 plane waves. In which directions?

2.3 Transfer function of free space

As seen before, the complex amplitude of a plane wave can be written as

$$\begin{aligned} U(x,y,z) &= A\exp\left[-j\left(k_x x + k_y y + k_z z\right)\right] \\ &= A\exp\left[-j\left(k_x x + k_y y\right)\right]\exp\left[-jk_z z\right] \\ &= A\exp\left[-j2\pi\left(\nu_x x + \nu_y y\right)\right]\exp\left[-jk_z z\right] \end{aligned}$$

where

$$k_x = 2\pi\nu_x,\ k_y = 2\pi\nu_y.$$

A plane wave at $z = d$ is equal to this plane wave at $z = 0$ (harmonic function $A\exp\left[-j2\pi\left(\nu_x x + \nu_y y\right)\right]$) multiplied by the phase factor $\exp\left[-jk_z d\right]$.

Since $k^2 = k_x^{\ 2} + k_y^{\ 2} + k_z^{\ 2}$ (Helmholtz)

$$k_z = \pm\left(k^2 - k_x^{\ 2} - k_y^{\ 2}\right)^{1/2} = \pm 2\pi\left(1/\lambda^2 - \nu_x^{\ 2} - \nu_y^{\ 2}\right)^{1/2}$$

- If $\nu_x^{\ 2} + \nu_y^{\ 2} \le \dfrac{1}{\lambda^2}$,then k_z is real. The sign of k_z depends on the direction of propagation. Here we consider a propagation in the direction of increasing z (+ sign). We can then write

$$U(x,y,d) = U(x,y,0) \times H(\nu_x,\nu_y)$$

where

$$\boxed{H(\nu_x,\nu_y) = \exp\left[-j2\pi\left(\frac{1}{\lambda^2} - \nu_x^{\ 2} - \nu_y^{\ 2}\right)^{1/2} d\right]}$$

H is called the **transfer function of free space**.

The magnitude of the transfer function $\left|H(\nu_x,\nu_y)\right| = 1$. The intensity of a plane wave is not modified during propagation, but it undergoes a phase change.

- If $\nu_x^{\ 2} + \nu_y^{\ 2} > \dfrac{1}{\lambda^2}$,then $k_z = \pm j2\pi\left(\nu_x^{\ 2} + \nu_y^{\ 2} - 1/\lambda^2\right)^{1/2}$. The transfert function is now real: $H(\nu_x,\nu_y) = \exp\left[\pm 2\pi\left(\nu_x^{\ 2} + \nu_y^{\ 2} - \dfrac{1}{\lambda^2}\right)^{1/2} d\right]$. The + sign gives an exponentially growing function, which is physically unacceptable. We have therefore

$H(\nu_x,\nu_y)=\exp\left[-2\pi\left(\nu_x^{\,2}+\nu_y^{\,2}-\frac{1}{\lambda^2}\right)^{1/2}d\right]$, which represents an attenuation factor. The wave is then called an **evanescent wave**. We may therefore regard $1/\lambda$ as the cutoff frequency of the system. Features contained in spatial frequencies greater than $1/\lambda$ (details smaller than λ) cannot be transmitted by an optical wave over distances much greater than the wavelength λ. The spatial resolution of imaging system in the "far field" is limited by the wavelength. Near-filed optical imaging was demonstrated recently to achieve super-resolution (not limited by the wavelength).

Fresnel approximation

The expression for the transfer function may be simplified if the spatial frequencies are such that $\nu_x^{\,2}+\nu_y^{\,2} \ll 1/\lambda^2$.

$$\left(\frac{1}{\lambda^2}-\nu_x^{\,2}-\nu_y^{\,2}\right)^{1/2}=\frac{1}{\lambda}\left[1-\lambda^2\left(\nu_x^{\,2}+\nu_y^{\,2}\right)\right]^{1/2}$$

$$=\frac{1}{\lambda}\left[1-\frac{\lambda^2\left(\nu_x^{\,2}+\nu_y^{\,2}\right)}{2}+\frac{\lambda^4\left(\nu_x^{\,2}+\nu_y^{\,2}\right)^2}{8}-\ldots\right]$$

We can approximate the transfer function by

$$\boxed{H(\nu_x,\nu_y)\approx\exp(-jkd)\exp\left[j\pi\lambda d\left(\nu_x^{\,2}+\nu_y^{\,2}\right)\right]}$$

In this approximation, the phase is a quadratic function of the spatial frequencies. This approximation is known as the **Fresnel approximation**.

☞ The condition of validity of the Fresnel approximation is that $2\pi\left[\frac{\lambda^3}{8}\left(\nu_x^{\,2}+\nu_y^{\,2}\right)^2\right]^{1/2}d \ll \pi$. Noting $\theta^2=\theta_x^{\,2}+\theta_y^{\,2}\approx\lambda^2\left(\nu_x^{\,2}+\nu_y^{\,2}\right)$, the condition of validity can be rewritten as :

$$\frac{\theta^4 d}{4\lambda} \ll 1$$

If a is the largest radial distance in the output plane, the largest angle is $\theta_m \approx a/d$. The condition of validity of the Fresnel approximation may be written in the form

$$\boxed{\frac{N_F\theta_m^{\,2}}{4} \ll 1}$$

where $N_F=a^2/\lambda d$ is the Fresnel number.

Input-output relation

Given an arbitrary monochromatic wave with complex amplitude $U(x,y,z)$ at $z=0$. It can be decomposed into a sum of plane waves:

$$U(x,y,0)=\iint \tilde{U}(\nu_x,\nu_y,0)\exp\left[-j2\pi\left(\nu_x x+\nu_y y\right)\right]d\nu_x d\nu_y$$

$\tilde{U}(\nu_x,\nu_y,0)$ is the Fourier transform of $U(x,y,0)$. It represents the complex envelop of plane-wave components at $z=0$:

$$\tilde{U}(\nu_x,\nu_y,0)=FT\left[U(x,y)\right] \qquad \tilde{U}(\nu_x,\nu_y,0)=\iint U(x,y)\exp\left[j2\pi\left(\nu_x x+\nu_y y\right)\right]dxdy$$

The complex envelop of plane-wave components at $z=d$ is :

$$\tilde{U}(\nu_x,\nu_y,d)=\tilde{U}(\nu_x,\nu_y,0)\times H(\nu_x,\nu_y)$$

The complex amplitude of the wave $U(x,y,z)$ at $z=d$ is the sum of the contribution of these plane waves :

$$U(x,y,d)=\iint \tilde{U}(\nu_x,\nu_y,d)\exp\left[-j2\pi\left(\nu_x x+\nu_y y\right)\right]d\nu_x d\nu_y$$

$$U(d)=FT^{-1}\left\{FT\left[U(0)\right]\times H\right\}$$

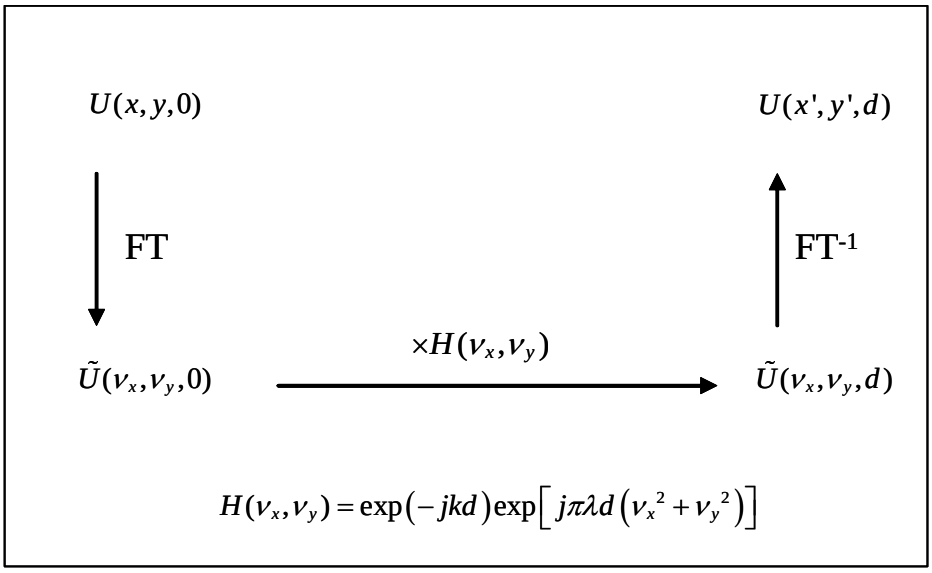

2.4 Impulse-response function of free space

From $U(d) = FT^{-1}\{FT[U(0)] \times H\}$, we see that $U(d) = U(0) * FT^{-1}(H)$ (convolution). The inverse Fourier transform of the Transfer function is called the impulse-response function[†]:

$$\boxed{h(x,y) = h_0 \exp\left(-jk\frac{x^2+y^2}{2d}\right) \quad with \quad h_0 = \left(\frac{j}{\lambda d}\right)\exp(-jkd)}$$

The impulse-response function of free space is proportional to the complex amplitude at $z = d$ of a paraboloidal wave centered about the origin (0, 0).

An alternative procedure for relating the complex amplitude of an arbitrary monochromatic wave between $z = 0$ and $z = d$ is to regard the wave at $z = 0$ as a superposition of points, each producing a paraboloidal wave. The wave originating at the point $(x', y', 0)$ has an amplitude $U(x', y', 0)$ and is centered about $(x', y', 0)$ so that it generates a wave with amplitude $U(x', y', 0) \times h(x - x', y - y')$. The sum of these contributions is the two-dimensional convolution

$$U(x,y,d) = \iint U(x',y',0)h(x-x',y-y')dx'dy'$$

$$\boxed{U(x,y,d) = h_0 \iint U(x',y',0)\exp\left[-j\pi\frac{(x-x')^2+(y-y')^2}{\lambda d}\right]dx'dy'}$$

This relation is also called the Fresnel integral. Note that it is possible to obtain this relation by simplifying the Rayleigh and Sommerfeld integral (using the Fresnel approximation), this integral being derived from the Helmholtz and Kirchhoff theorem based on the Helmholtz equation and the Green theorem (see appendix)

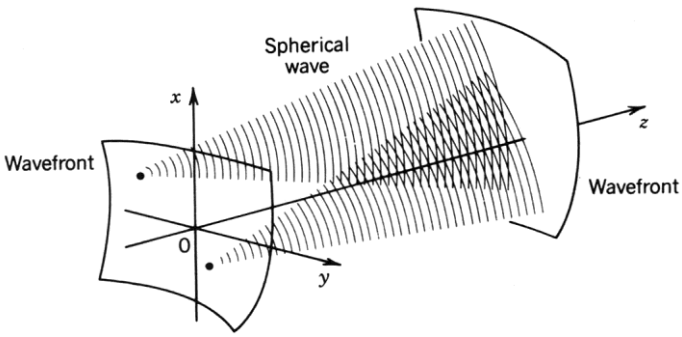

[†] Using the following Fourier transform relation: $\exp\left[-\pi a\left(\nu_x^2 + \nu_y^2\right)\right] \rightarrow \frac{1}{a}\exp\left[-\frac{\pi}{a}\left(x^2+y^2\right)\right]$

This result is consistent with the **Huygens-Fresnel principle** which states that each point on a wavefront generates an elementary spherical wave. The envelope of these elementary waves constitutes a new wavefront. Their superposition constitutes the wave in another plane. In the Fresnel approximation, a spherical wave centered at (0, 0) is approximated by the paraboloidal wave :

$$h(x,y) = \exp\left(-jk\frac{x^2+y^2}{2d}\right)$$

2.5 Summary

In summary, within the Fresnel approximation, there are two approaches to determining the complex amplitude of an arbitrary wave at $z = d$, given the amplitude at $z = 0$. In the **space domain approach**, in which the wave is expanded in terms of **paraboloidal elementary waves**, and in the **frequency-domain approach** in which the wave is expanded as a **sum of plane waves**. The procedure of calculation is described in the following table:

$$\begin{tikzcd}
U(x,y,0) \arrow[r, "*h(x,y)"] \arrow[d, "\mathrm{FT}"] & U(x',y',d) \\
\tilde{U}(\nu_x,\nu_y,0) \arrow[r, "\times H(\nu_x,\nu_y)"] & \tilde{U}(\nu_x,\nu_y,d) \arrow[u, "\mathrm{FT}^{-1}"']
\end{tikzcd}$$

$$h(x,y) = \frac{j\exp(-jkd)}{\lambda d}\exp\left[-j\pi\frac{(x^2+y^2)}{\lambda d}\right]$$

$$H(\nu_x,\nu_y) = \exp(-jkd)\exp\left[j\pi\lambda d\left(\nu_x{}^2+\nu_y{}^2\right)\right]$$

3. OPTICAL FOURIER TRANSFORM

3.1 Amplitude in the far-field

Consider the relation between $U(x,y,d)$ and $U(x',y',0)$ in the space-domain approach. We have

$$U(x,y,d) = h_0 \iint U(x',y',0) \exp\left[-j\pi \frac{(x-x')^2 + (y-y')^2}{\lambda d}\right] dx'dy'$$

The phase in the exponent is:

$$(\pi/\lambda d)\left[(x-x')^2 + (y-y')^2\right] = (\pi/\lambda d)\left[(x^2+y^2) + (x'^2+y'^2) - 2(xx'+yy')\right]$$

Suppose that $U(x',y',0)$ is confined to a circle of radius b, and that the distance *d* is sufficiently large so that the Fresnel number $N_F' = b^2/\lambda d \ll 1$.

$$(\pi/\lambda d)\left[(x-x')^2 + (y-y')^2\right] \approx (\pi/\lambda d)(x^2+y^2) - (2\pi/\lambda d)(xx'+yy')$$

We have then

$$U(x,y,d) = h_0 \exp\left[-j\pi \frac{x^2+y^2}{\lambda d}\right] \iint U(x',y',0) \exp\left[j2\pi \frac{xx'+yy'}{\lambda d}\right] dx'dy'$$

Suppose that $U(x,y,d)$ is confined to a circle of radius a, and that the distance *d* is sufficiently large so that the Fresnel number $N_F = a^2/\lambda d \ll 1$. We have then

$$U(x,y,d) \approx h_0 \iint U(x',y',0) \exp\left[j2\pi \frac{xx'+yy'}{\lambda d}\right] dx'dy'$$

We can recognize a Fourier transform:

$$\boxed{U(x,y,d) \propto \tilde{U}\left(\frac{x}{\lambda d}, \frac{y}{\lambda d}, 0\right)}$$

This approximation is called the Fraunhofer approximation. It is valid when the Fresnel numbers N_F and N_F' are small. The Fraunhofer approximation is more difficult to satisfy than the Fresnel approximation, which requires that $N_F \theta_m^2/4 \ll 1$. Since $\theta_m \ll 1$ in the paraxial approximation, it is possible to satisfy the Fresnel condition $N_F \theta_m^2/4 \ll 1$ for Fresnel numbers N_F not necessarily $\ll$ 1.

In the **Fraunhofer** approximation, the complex amplitude $U(x,y,d)$ of a monochromatic wave of wavelength λ, at $z=d$, is proportional to the Fourier transform of the complex amplitude $U(x,y,0)$ at $z=0$, evaluated at the spatial frequencies $\nu_x = x/\lambda d$ and $\nu_y = y/\lambda d$. The approximation is valid if $U(x,y,0)$ is confined to a circle of radius *b* satisfying $b^2/\lambda d \ll 1$ and if $U(x,y,d)$ is confined to a circle of radius *a* satisfying $a^2/\lambda d \ll 1$.

EXERCICE 6: Conditions of validity of the Fresnel and Fraunhofer approximations.

Demonstrate that the Fraunhofer approximation is more restrictive than the Fresnel approximation by taking λ = 0.5 µm; assuming that the objects points (*x*, *y*) lie within a circle of radius *a* = 1 cm, and determining the range of distances *d* for which the two approximations are applicable. The wave is observed on the axis *z*.

3.2 Amplitude in the back focal plane of a lens

An arbitrary wave can be decomposed into a sum of plane waves. The plane wave-components may be separated by use of a converging lens as illustrated in the Figure below. The spherical lens transforms each plane wave into a paraboloidal (spherical) wave focused in the back focal plane of the lens (see Exercice 2). If a plane wave arrives at small angles (θ_x, θ_y), it is transformed into a paraboloidal wave centered about the point $(x=\theta_x f, y=\theta_y f)$, where f is the focal length of the lens. The lens therefore maps each direction (θ_x, θ_y), determined by the spatial frequencies $(\nu_x = \theta_x/\lambda, \nu_y = \theta_y/\lambda)$ into a single point (x,y) in the focal plane and thus separates the different plane waves components.

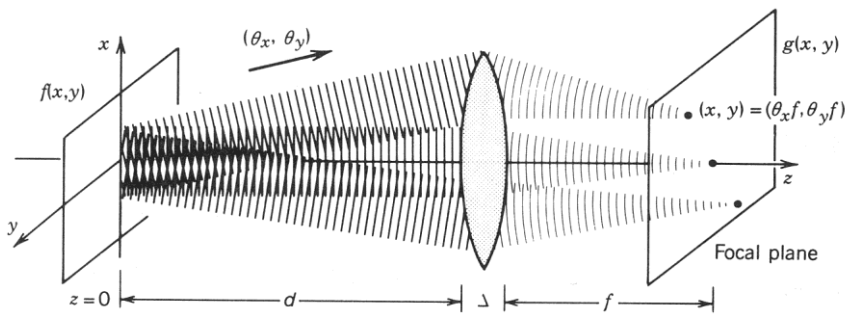

Reference : "Fundamentals of Photonics" (Wiley Series in Pure and Applied Optics). Bahaa E. A. Saleh, Malvin Carl Teich. John Wiley & Sons, 1st edition (August 15, 1991)

Let $f(x,y)$ be the complex amplitude of the optical wave in the plane z = 0, located at an arbitrary distance d from the lens. Light is decomposed into plane waves with complex amplitudes proportional to $\tilde{f}(\nu_x, \nu_y)$. The planes waves are focused in the focal plane at points (x,y) defined by $x=\theta_x f = \lambda \nu_x f$ and $y=\theta_y f = \lambda \nu_y f$. The complex amplitudes at points

(x,y) in the focal plane are therefore proportional to the Fourier transform of $f(x,y)$ evaluated at $\nu_x = x/\lambda f$, $\nu_y = y/\lambda f$.

$$\boxed{g(x,y) \propto \tilde{f}\left(\frac{x}{\lambda f},\frac{y}{\lambda f}\right)}$$

To determine the proportionality factor, we analyse the incident wave into its Fourier components (plane wave decomposition) and propagate them into the optical system. We then superimpose the contributions of these plane waves in the focal plane. We assume that the Fresnel approximation is valid.

In the plane $z=0$; the plane wave with angles (θ_x,θ_y) has a complex amplitude $U(x,y,0) = \tilde{f}(\nu_x,\nu_y)\exp\left[-j2\pi\left(\nu_x x+\nu_y y\right)\right]$. In the plane $z=d^-$ (just before crossing the lens), the amplitude of the plane wave is $U(x,y,d^-) = \tilde{f}(\nu_x,\nu_y)\exp\left[-j2\pi\left(\nu_x x+\nu_y y\right)\right]\times H_d\left(\nu_x,\nu_y\right)$, with $H_d\left(\nu_x,\nu_y\right) = \exp\left(-jkd\right)\exp\left[j\pi\lambda d\left(\nu_x^{\ 2}+\nu_y^{\ 2}\right)\right]$.

Upon crossing the lens, the complex amplitude is multiplied by the transmittance of the lens. We suppose that the lens is very thin (Δ = 0). Within the Fresnel approximation, the complex transmittance of the lens is

$$t(x,y) = \exp\left(jk_0\frac{x^2+y^2}{2f}\right) = \exp\left(j\pi\frac{x^2+y^2}{\lambda f}\right).$$

Upon crossing the lens, the amplitude of the plane wave is therefore

$$U(x,y,d^+) = \tilde{f}(\nu_x,\nu_y)\exp\left[-j2\pi\left(\nu_x x+\nu_y y\right)\right]\times H_d\left(\nu_x,\nu_y\right)\times t(x,y)$$

By noting

$$\begin{cases} -2\nu_x x + x^2/\lambda f = \left(x^2 - 2\nu_x\lambda f x\right)/\lambda f = \left[(x-x_0)^2 - x_0^{\ 2}\right]/\lambda f \\ -2\nu_y y + y^2/\lambda f = \left(y^2 - 2\nu_y\lambda f y\right)/\lambda f = \left[(y-y_0)^2 - y_0^{\ 2}\right]/\lambda f \end{cases}$$

with $x_0 = \lambda\nu_x f$ and $y_0 = \lambda\nu_y f$,

the amplitude of the wave can be rewritten

$$U(x,y,d^+) = A\left(\nu_x,\nu_y\right)\exp\left[j\pi\frac{\left(x-x_0\right)^2+\left(y-y_0\right)^2}{\lambda f}\right]$$

where

$$A\left(\nu_x,\nu_y\right) = \exp\left(-jkd\right)\exp\left[j\pi\lambda\left(d-f\right)\left(\nu_x^{\ 2}+\nu_y^{\ 2}\right)\right]\tilde{f}(\nu_x,\nu_y)$$

We recognize here the complex amplitude of a paraboloidal wave (spherical wave) converging toward the point (x_0, y_0) in the lens focal plane.

We now have to examine the propagation in free space between the lens and its focal plane. By using the Fresnel integral, we obtain finally

$$U(x,y,d+f) = h_0(\lambda f)^2 A(\nu_x,\nu_y)\delta(x-x_0)\delta(y-y_0)$$

where

$$h_0 = \left(\frac{j}{\lambda f}\right)\exp(-jkf)$$

The plane wave is focused into a single point at $x_0 = \lambda \nu_x f$, $y_0 = \lambda \nu_y f$.

The last step is to integrate over all the plane waves (all values of ν_x and ν_y). We finally obtain

$$g(x,y) = h_0 A(x/\lambda f, y/\lambda f)$$

or

$$\boxed{g(x,y) = h_l \exp\left[j\pi \frac{(x^2+y^2)(d-f)}{\lambda f^2}\right]\tilde{f}\left(\frac{x}{\lambda f},\frac{y}{\lambda f}\right)}$$

where

$$h_l = \exp(-jkd)\exp\left[j\pi\lambda(d-f)\left(\nu_x^{\,2}+\nu_y^{\,2}\right)\right]\tilde{f}(\nu_x,\nu_y)$$

The intensity in the lens focal plane is

$$\boxed{I(x,y) = \frac{1}{(\lambda f)^2}\left|\tilde{f}\left(\frac{x}{\lambda f},\frac{y}{\lambda f}\right)\right|^2}$$

<u>The intensity of light in the back focal plane of the lens is proportional to the squared absolute value of the Fourier Transform of the amplitude of the wave at the input plane, regardless of the distance d .</u>

If $d = f$ (front focal plane of the lens), we have then

$$\boxed{g(x,y) = h_l \tilde{f}\left(\frac{x}{\lambda f},\frac{y}{\lambda f}\right)}$$

where

$$h_l = (j/\lambda f)\exp(-j2kf).$$

The complex amplitude of light at a point (x, y) in the back focal plane of a lens of focal length f is proportional to the **Fourier transform** of the complex amplitude of the complex amplitude in the front focal plane evaluated at the spatial frequencies $\nu_x = x/\lambda f$ and $\nu_y = y/\lambda f$. This relation is valid in the Fresnel approximation. That is why the back focal plane of a lens is called the Fourier plane. Without lens, the Fourier transformation is obtained only in the Fraunhofer approximation, which is more restrictive.

4. DIFFRACTION

When an optical wave is transmitted through an aperture and travel some distances in free space, its intensity is called the diffraction pattern. If light were treated as rays, the diffraction pattern would be a shadow of the aperture. Because of the wave nature of light, however, the diffraction pattern may deviate from the aperture shadow, depending on the distance between the aperture and the observation plane, the wavelength, and dimensions of the aperture.

The aperture is characterized by a transmittance, or aperture function:

$$p(x, y) = \begin{cases} 1 & \text{inside the aperture} \\ 0 & \text{outside the aperture} \end{cases}$$

The incident wave is multiplied by the aperture function and then propagates in free space. The diffraction pattern is the intensity distribution of the light at a distance *d* from the aperture. The diffraction pattern is known as the **Fresnel diffraction** or **Fraunhofer diffraction**, depending on whether free space propagation is described using the Fresnel approximation or the Fraunhofer diffraction, respectively.

4.1 Fresnel diffraction

The theory of Fresnel diffraction is based on the assumption that the incident wave is multiplied by the aperture function $p(x, y)$ and propagates in free space in accordance with the Fresnel approximation **(valid at any distance)**.

Explicit analytical expression of Fresnel diffraction patterns are often difficult to establish (it was however easy for a Gaussian wave, see exercise). Numerical simulation are generally performed (see examples)

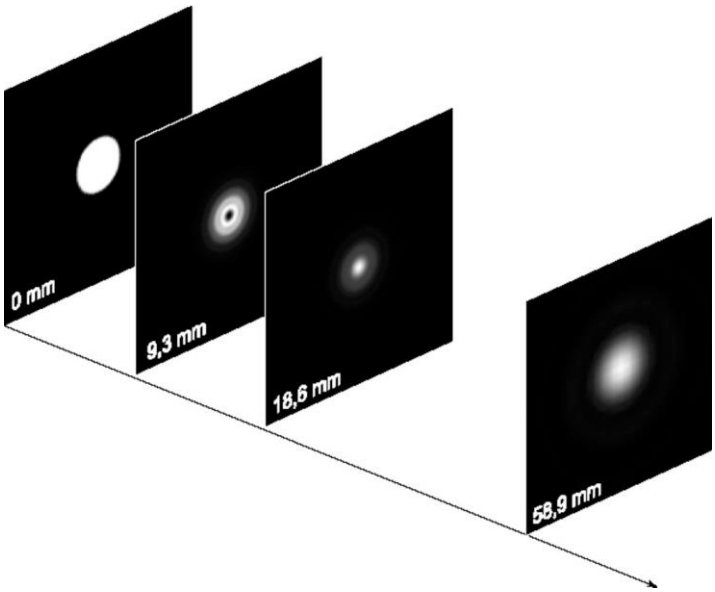

Numerical simulations of Fresnel diffraction patterns resulting from diffraction by a circular aperture (diameter = 218 µm) illuminated with a plane wave at λ = 632.8 nm. The plane z = 0 mm corresponds to the plane of the aperture.

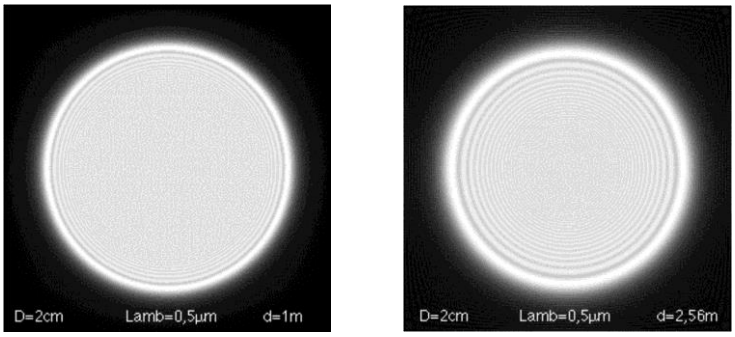

Numerical simulations of Fresnel diffraction patterns resulting from diffraction by a circular aperture (diameter = 2 cm) illuminated with a plane wave at λ = 500 nm. The propagation distance is 1 m (left) and 2 m (right).

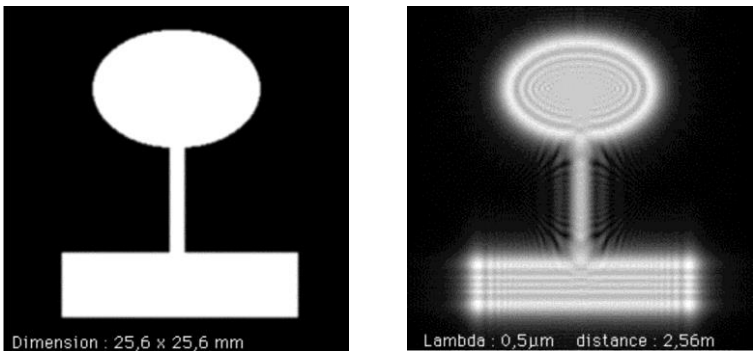

Numerical simulations of Fresnel diffraction. The aperture (left) is illuminated with a plane wave at λ = 500 nm. The diffraction pattern (right) is calculated after propagation over a distance of 2.56 m.

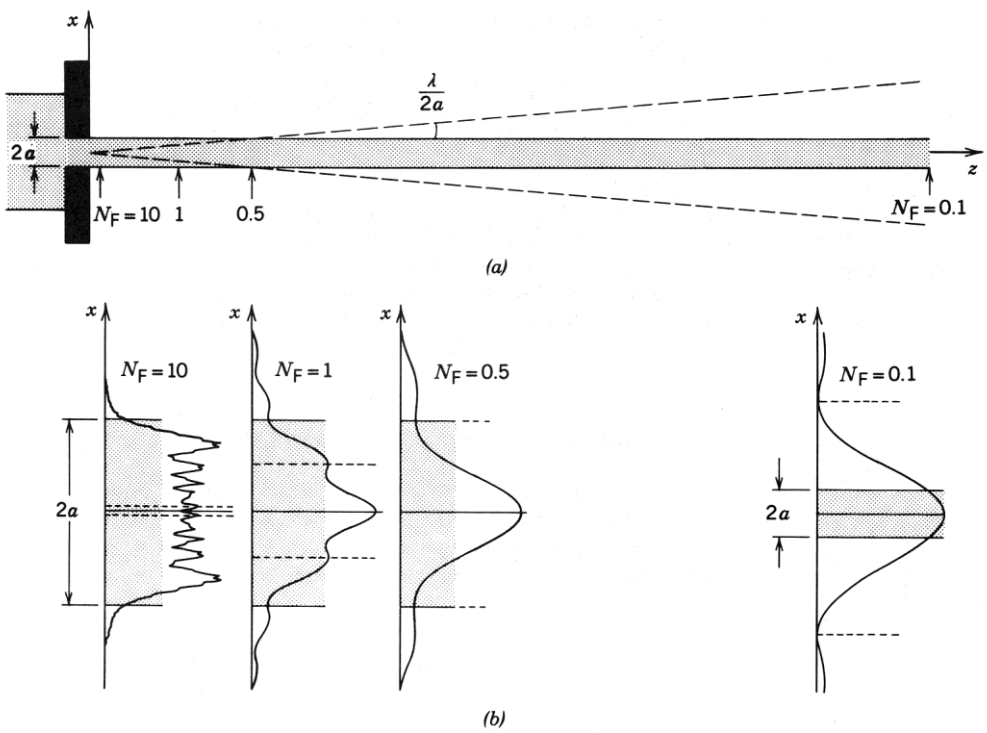

Fresnel diffraction from a slit of width $D = 2a$. (a) Shaded area is the geometrical shadow of the aperture. The dashed line is the width of the Fraunhofer diffracted beam. (b) Diffraction pattern at four axial positions marked by the arrows in (a) and corresponding to the Fresnel numbers $N_F = 10, 1, 0.5$, and 0.1. The shaded area represents the geometrical shadow of the slit. The dashed lines at $|x| = (\lambda/D)d$ represent the width of the Fraunhofer pattern in the far field. Where the dashed lines coincide with the edges of the geometrical shadow, the Fresnel number $N_F = a^2/\lambda d = 0.5$.

Reference : "Fundamentals of Photonics" (Wiley Series in Pure and Applied Optics). Bahaa E. A. Saleh, Malvin Carl Teich. John Wiley & Sons, 1st edition (August 15, 1991)

4.2 Fraunhofer diffraction

The theory of Fraunhoffer diffraction is based on the assumption that the incident wave is multiplied by the aperture function $p(x,y)$ and propagates in free space in accordance with the Fraunhoffer approximation **(valid only in far-field).**

Assuming that the incident wave is a plane wave of intensity I_0 travelling in the z direction, the complex amplitude in the plane of the aperture is $\sqrt{I_0}\,p(x,y)$. As seen earlier, the complex amplitude in the far field is $U(x,y,d) = \sqrt{I_0}h_0\,\tilde{p}(\frac{x}{\lambda d},\frac{y}{\lambda d})$ with $h_0 = \left(\frac{j}{\lambda d}\right)\exp(-jkd)$.

The diffraction pattern is therefore:

$$\boxed{I(x,y) \propto I_0\left|\tilde{p}\left(\frac{x}{\lambda d},\frac{y}{\lambda d}\right)\right|^2}$$

The Fraunhofer diffraction pattern at the point (x, y) is proportional to the squared magnitude of the Fourier transform of the aperture function $p(x,y)$ evaluated at the spatial frequencies $\nu_x = x/\lambda d$ and $\nu_y = y/\lambda d$.

The Fraunhofer approximation is valid for distances d that are usually extremely large. They are satisfied in applications of long-distance free-space optical communication such as laser radar (lidar) and satellite communication. However, if a lens of focal length f is used to focus the diffracted light, the intensity pattern in the focal plane is proportional to the squared magnitude of the Fourier transform of $p(x,y)$ evaluated at $\nu_x = x/\lambda f$ and $\nu_y = y/\lambda f$:

$$\boxed{I(x,y) \propto I_0 \left| \tilde{p}\left(\frac{x}{\lambda f}, \frac{y}{\lambda f} \right) \right|^2}$$

<u>Diffraction from a rectangular aperture</u>: The Frauhofer diffraction pattern from a rectangular aperture, of height and width D_x and D_y, observed at a distance d is:

$$\boxed{I(x,y) = I_0 \operatorname{sinc}^2\left(\frac{\pi D_x x}{\lambda d} \right) \operatorname{sinc}^2\left(\frac{\pi D_y y}{\lambda d} \right)}$$

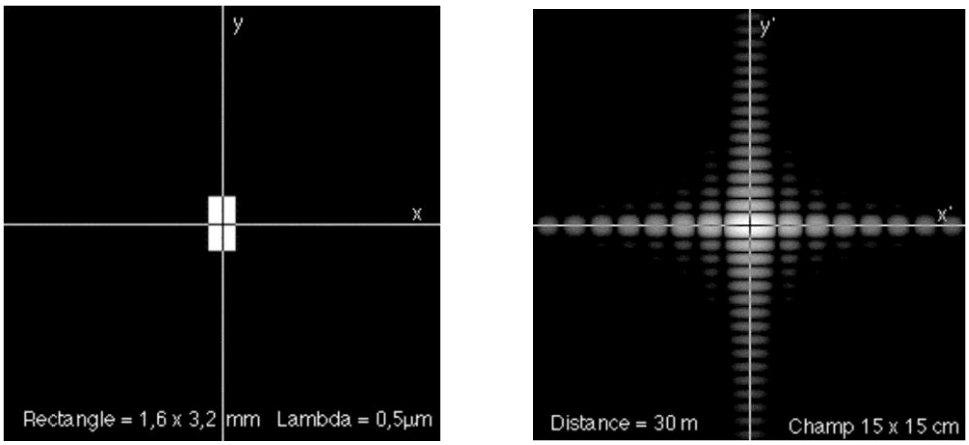

Fraunhofer diffraction from a rectangular aperture (1.6 × 3.2 mm) (left), illuminated with a plane wave at λ = 500 nm. The diffraction pattern (right) is calculated at a distance of 30 m.

Diffraction from a circular aperture: the Frauhofer diffraction pattern from a circular aperture of diameter *D* is:

$$\boxed{I(x,y) = I_0\left[\frac{2J_1(\pi Dr/\lambda d)}{\pi Dr/\lambda d}\right]^2 \quad \text{with} \quad r = \left(x^2+y^2\right)^{1/2}}$$

The diffraction pattern consists of a central disk surrounded by rings. It is known as the Airy pattern. The radius of the central disk is

$$\begin{cases} r_0 = 1.22\lambda d/D \\ \theta_0 = 1.22\lambda/D \end{cases}$$

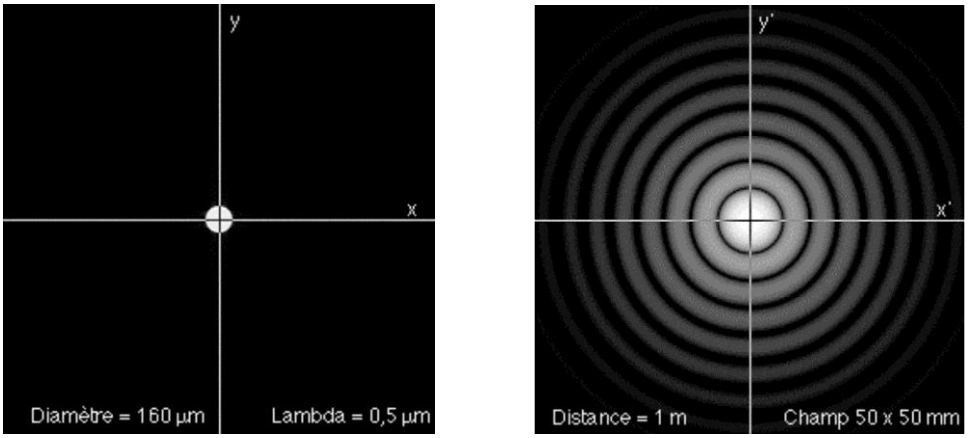

Fraunhofer diffraction from a circular aperture (diameter = 160 µm) (left), illuminated with a plane wave at λ = 500 nm. The diffraction pattern (right) is calculated at a distance of 1 m.

5. SPATIAL FILTERING

Consider a two-lens imaging system as the one illustrated below:

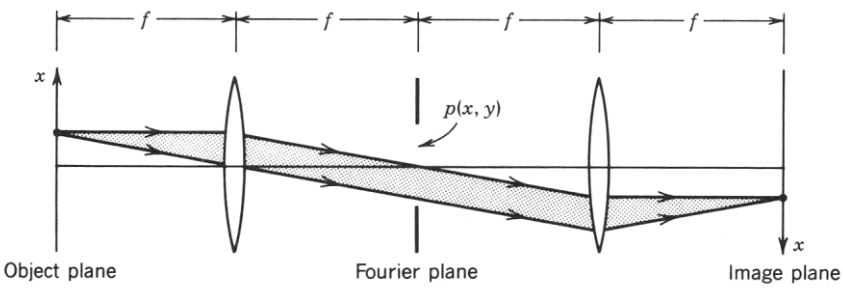

This system, called 4-*f* imaging system, has a magnification of -1.

This optical system can be recognized as an association of two Fourier-transforming subsystems. The first subsystem performs a Fourier Transform, and the second another Fourier transform. As a result, in the absence of an aperture the image is the perfect replica of the object (with a magnification -1).

Let $f(x,y)$ be the complex amplitude in the object plane and *g*(*x*, *y*) the complex amplitude in the image plane. The first lens analyzes $f(x,y)$ into its spatial Fourier transform and separates its Fourier components so that <u>each point in the Fourier plane corresponds to a single spatial frequency</u>. These components are then recombined by the second lens system and the object distribution is perfectly reconstructed.

The 4-f imaging system can be used as a spatial filter in which the image *g*(*x*, *y*) is a filtered version of the object $f(x,y)$. Since the Fourier components of $f(x,y)$ are available in the Fourier plane, a mask may be used to adjust them selectively, blocking some components and transmitting others, as illustrated.

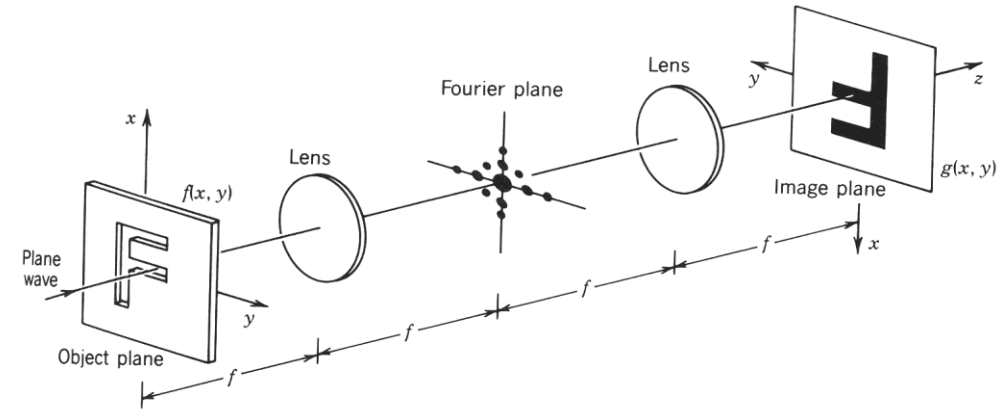

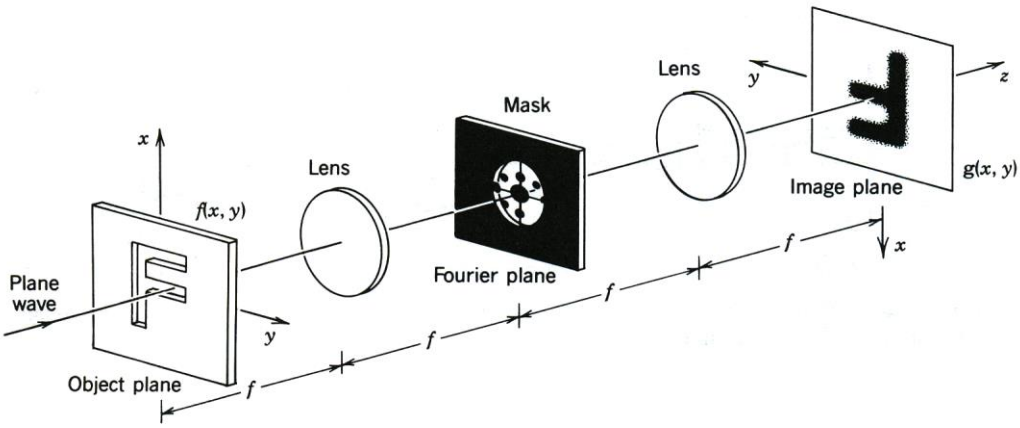

Reference : "Fundamentals of Photonics" (Wiley Series in Pure and Applied Optics). Bahaa E. A. Saleh, Malvin Carl Teich. John Wiley & Sons, 1st edition (August 15, 1991)

Examples of spatial filters

The ideal low-pass filter has a transmittance represented by the "Disk" function. For example, if the radius of the disk is r_0 and the optical wavelength λ, the filter eliminates the spatial frequencies greater than $\nu_c = r_0 / \lambda f$.

• The high-pass filter is the complement of the low-pass filter. It blocks low frequencies and transmits high frequencies. The mask is a clear transparency with an opaque central disk. The filter output is high at regions of large rate of change and small at regions of smooth or slow variation of the object. This filter is therefore useful for edge enhancement in image-processing applications.

• The vertical-pass filter blocks horizontal frequencies and transmits vertical frequencies. Only variations in the *x* direction are transmitted. If the mask is a vertical slit of width *D*, the highest transmitted frequency is $\nu_y = (D/2)/\lambda f$.

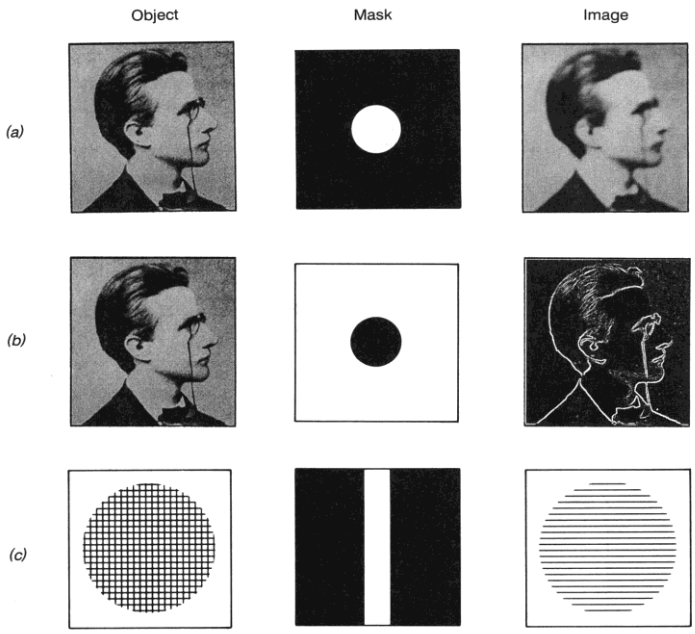

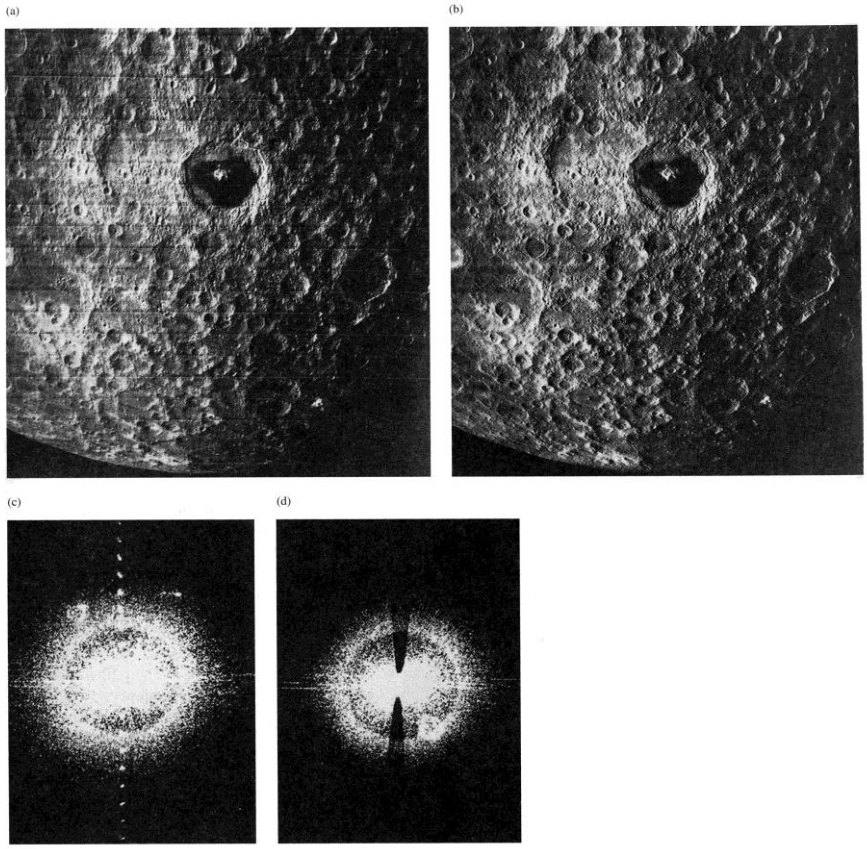

Composit photo of the moon (a). Filtered photo without horizontal lines (b). Fourier transform (c). Filtered Fourier transform (d).

Reference : "Fundamentals of Photonics" (Wiley Series in Pure and Applied Optics). Bahaa E. A. Saleh, Malvin Carl Teich. John Wiley & Sons, 1st edition (August 15, 1991)

6. Image formation

We consider image formation using the single lens imaging system shown below:

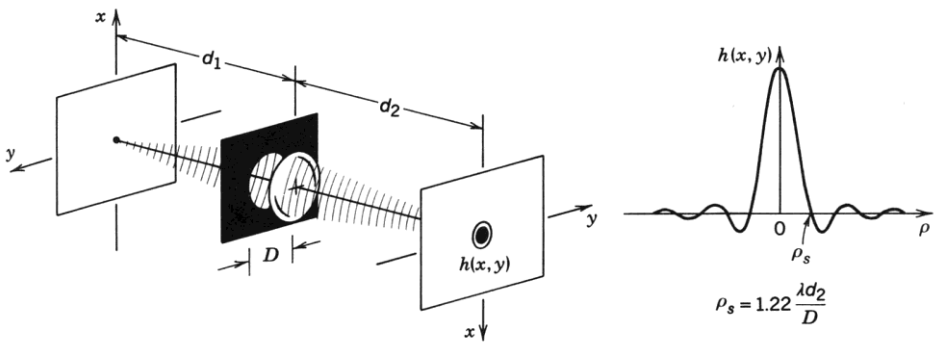

Reference : "Fundamentals of Photonics" (Wiley Series in Pure and Applied Optics). Bahaa E. A. Saleh, Malvin Carl Teich. John Wiley & Sons, 1st edition (August 15, 1991)

6.1 Impulse response function

By definition, the impulse response is the complex amplitude in the image plane of the wave emitted by the point (an impulse) on the optical axis in the object plane. This point emits a spherical wave, whose complex amplitude in the aperture plane (just before the lens) is

$$U(x,y) = h_1 \exp\left(-jk\frac{x^2+y^2}{2d_1}\right) \qquad \text{where} \quad h_1 = \left(\frac{j}{\lambda d_1}\right)\exp(-jkd_1)$$

Upon crossing the aperture and the lens, the complex amplitude becomes

$$U_1(x,y) = U(x,y)\exp\left(jk\frac{x^2+y^2}{2f}\right)p(x,y)$$

The resultant field $U_1(x,y)$ then propagates in free space a distance d_2. The complex amplitude in the image plane is then obtained by a convolution, according to

$$h(x,y) = h_2 \iint U_1(x',y')\exp\left[-j\pi\frac{(x-x')^2+(y-y')^2}{\lambda d_2}\right]dx'dy' \quad \text{where} \quad h_2 = \left(\frac{j}{\lambda d_2}\right)\exp(-jkd_2)$$

We have finally:

$$h(x,y) = h_1 h_2 \exp\left[-j\pi\frac{x^2+y^2}{\lambda d_2}\right]\tilde{p}_1\left(\frac{x}{\lambda d_2},\frac{y}{\lambda d_2}\right),$$

where $\tilde{p}_1$ is the Fourier transform of the function $p_1(x,y) = p(x,y)\exp\left[-j\pi\varepsilon\frac{x^2+y^2}{\lambda}\right]$, and $\varepsilon = \frac{1}{d_2}+\frac{1}{d_1}-\frac{1}{f}$.

If the system is focused ($\varepsilon = 0$), $p_1 = p$. We have then

$$h(x,y) = h_0 \exp\left[-j\pi\frac{x^2+y^2}{\lambda d_2}\right]\tilde{p}\left(\frac{x}{\lambda d_2},\frac{y}{\lambda d_2}\right)$$

where $h_0 = h_1 h_2$.

The function $h(x,y)$ is called the impulse response function of the imaging system.

If the phase factor $\pi\frac{x^2+y^2}{\lambda d_2}$ is much smaller than 1, it can be neglected, so that

$$h(x,y) = h_0 \tilde{p}\left(\frac{x}{\lambda d_2},\frac{y}{\lambda d_2}\right)$$

The system's impulse response is proportional to the Fourier transform of the pupil function *p*.

6.2 Image formation with coherent illumination

In the ray optics theory, each point *A* of the object, located at (x_0, y_0), has an image which is a point *A'* located at (x_0', y_0'). In the wave optics theory, the image of the point *A* is proportional to the impulse response function centered on *A'* : $h(x'-x_0', y'-y_0')$. The complex amplitude $U_{image(wave\,optics)}$ in the image plane is therefore:

$$U_{image(wave\,optics)}(x', y') = \iint U_{image(ray\,optics)}(x_0', y_0')h(x'-x_0', y'-y_0')dx_0'dy_0'$$

where $U_{image(ray\,optics)}$ is the image obtained by ray tracing. This result can be written in a condensed manner as using the convolution operator:

$$U_{image(wave\,optics)} = U_{image(ray\,optics)} * h$$

The image in amplitude is the perfect image (in amplitude, according to the ray optics theory) convoluted by the impulse response function.

The spatial frequencies of the wave in the image plane are given by

$$\tilde{U}_{image(wave\,optics)} = \tilde{U}_{image(ray\,optics)} \times H$$

where $H(\nu_x, \nu_y)$ is the transfert function of the imaging system, defined as the Fourier transform of the impulse response function.

$$H(\nu_x, \nu_y) = p(\lambda d_2 \nu_x, \lambda d_2 \nu_y)$$

where $p(x, y)$ is the pupil function.

The image in intensity (which is what we can observe on a screen or a camera) is then:

$$\left|U_{image(wave\,optics)}\right|^2 = \left|U_{image(ray\,optics)} * h\right|^2$$

The description of image formation considered here is valid if we consider coherent light.
The concept of coherence will be presented in the next chapter

6.3 Image formation with incoherent illumination

In the previous studies, the light was supposed to be spatially **coherent**. This means that when several optical waves are superimposed, the amplitude of the resulting wave is the sum of the amplitude of each wave. If the light is supposed to be spatially **incoherent**, this result is not true. The superposition of several incoherent waves gives a wave whose intensity (and not amplitude) is the sum of the intensity (and not amplitude) of each wave.

The image of a point given by an optical system (the impulse response) has an intensity $\left|h\left(x'-x_0',y'-y_0'\right)\right|^2$. The image formation with incoherent illumination is therefore given by

$$I_{image(wave\ optics)}(x',y')=\iint I_{image(ray\ optics)}(x_0',y_0')h_{inc}\left(x'-x_0',y'-y_0'\right)dx_0'dy_0',$$

$$\text{with } h_{inc}\left(x',y'\right)=\left|h\left(x',y'\right)\right|^2$$

Using condensed notation, we write :

$$I_{image(wave\,optics)}=I_{image(ray\,optics)}*h_{inc}\ .$$

By taking the Fourier transform of the previous relation, we have

$$\tilde{I}_{image(wave\,optics)}=\tilde{I}_{image(ray\,optics)}\times H_{inc}\ ,$$

where $H_{inc}=\tilde{h}_{inc}$ is referred to as the <u>incoherent transfer function of the optical system.</u>

The <u>modulation transfert function</u> is defined as $\left|H_{inc}\right|$.

Summary

Image given by an optical system

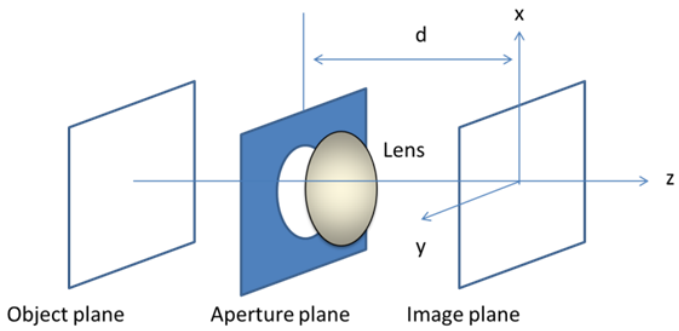

Coherent illumination

amplitude $U_{(wave\,optics)} = U_{(ray\,optics)} * h$ $\qquad h(x,y) \approx \tilde{p}\left(\frac{x}{\lambda d}, \frac{y}{\lambda d}\right)$

intensity $I_{(wave\,optics)} = \left|U_{(ray\,optics)} * h_{inc}\right|^2$

$\tilde{U}_{(wave\,optics)} = \tilde{U}_{(ray\,optics)} \times H$ $\qquad H(\nu_x, \nu_y) = p(\lambda d \nu_x, \lambda d \nu_y)$

Incoherent illumination

intensity $I_{(wave\,optics)} = I_{(ray\,optics)} * h_{inc}$ $\qquad h_{inc} = |h|^2$

$\tilde{I}_{(wave\,optics)} = \tilde{I}_{(ray\,optics)} \times H_{inc}$ $\qquad H_{inc} = \tilde{h}_{inc}$

p = pupil function (unity within the aperture, zero elsewhere)
h = impulse response function in amplitude
H = transfer function (with coherent illumination)
h_{inc} = incoherent impulse response function, point spread function (PSF)
H_{inc} = incoherent transfer function
$|H_{inc}|$ = modulation transfer function
d = distance from the optical system to the image plane

<u>Example</u>: Imaging system with a circular aperture

If the pupil is a circle of radius a, the pupil function $p(x,y)=1$ for points inside the circle and zero elsewhere. The pupil function is described by $p(x,y)=dis\left(\frac{r}{a}\right)$ where $r=\sqrt{x^2+y^2}$.

The coherent impulse response function of the imaging system is then

$$h(x,y)\propto\frac{J_1(2\pi\nu_s r)}{2\pi\nu_s r} \text{ where } \nu_s=\frac{a}{\lambda d}$$

The incoherent impulse response function is

$$h_{inc}(x,y)=\left|h(x,y)\right|^2\propto\left[\frac{J_1(2\pi\nu_s r)}{2\pi\nu_s r}\right]^2 \quad \text{(Airy function)}$$

The first zeros of h and h_{inc} are located at $r_s \square 1{,}22\frac{\lambda d}{a}$.

With incoherent illumination, each point in the object plane has an image that is proportional to h_{inc}. When two points of the object plane are close enough so that their images are distant of the quantity r_s, then it becomes impossible to resolve them. The quantity $r_s=1{,}22\frac{\lambda d}{a}$ is a <u>measure of the resolution of the imaging system.</u>

In the case of <u>coherent</u> illumination, the coherent transfert function of the imaging system is

$$H(\nu_x,\nu_y)=dis\left(\frac{\nu}{\nu_s}\right) \text{ where } \nu=\sqrt{\nu_x^{\,2}+\nu_y^{\,2}}$$

In the case of <u>incoherent</u> illumination, the incoherent transfert function of the imaging system is

$$H_{inc}(\nu_x,\nu_y)=\begin{cases}\frac{2}{\pi}\left\{\cos^{-1}\frac{\nu}{2\nu_s}-\frac{\nu}{2\nu_s}\left[1-\left(\frac{\nu}{2\nu_s}\right)^2\right]^{1/2}\right\} & \text{if } \nu<2\nu_s\\ 0 \quad \text{otherwise}\end{cases}$$

The cutoff frequency is $\nu_c=\begin{cases}\frac{a}{\lambda d} & \text{with coherent illumination}\\ \frac{2a}{\lambda d} & \text{with incoherent illumination}\end{cases}$

The impulse response functions and tranfert functions with coherent or incoherent illumination are shown below:

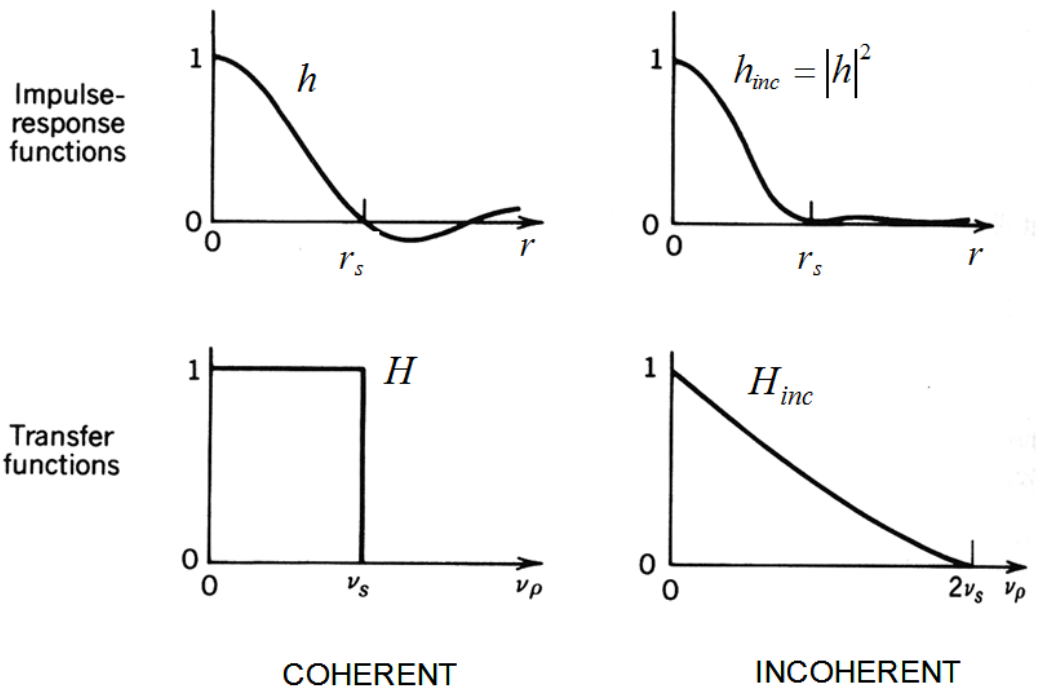

Impulse-response functions and transfer functions of a diffraction-limited single lens under coherent (a) and incoherent (b) illumination. The pupil is supposed to be a circle of radius a.

Appendix 1

I. Elément de la théorie scalaire de la diffraction

I.1. Position du problème.

On considère un volume homogène[1] limité par une surface fermée $\sum_V$. Cette surface $\sum_V$ possède une ouverture **S** plane par laquelle peut pénétrer des ondes électromagnétiques créées par des sources extérieures au volume.

Le problème consiste à déterminer le champ (scalaire) U(P') en n'importe quel point P' de ce volume V connaissant la valeur du champ U(P) en tous points P du plan $\sum$.

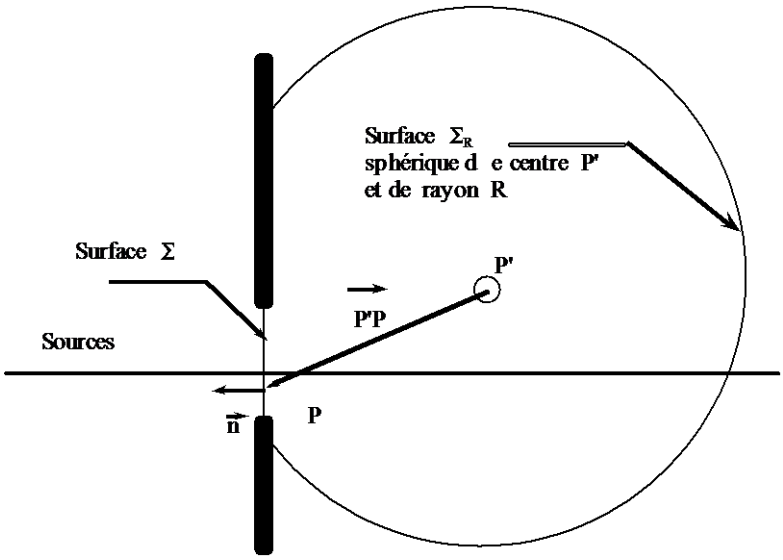

Le modèle décrit dans la suite est celui de **Rayleigh et Sommerfeld**. Il permet d'estimer la valeur scalaire du champ au point P' connaissant le champ en tout point P de la surface S par la relation suivante :

$$\boxed{U(P') = -\frac{i}{\lambda}\iint_{\Sigma} U(P)\frac{e^{ik\cdot PP'}}{PP'}\cos\left(\vec{n},\overrightarrow{P'P}\right)ds}$$

Cette relation nécessite quelques commentaires afin d'en bien connaître ses limites. On donnera donc par la suite quelques éléments du raisonnement sans entrer dans les démonstrations mathématiques que l'on pourra trouver dans la référence citées en bas de page [2].

---

1) Volume homogène signifie : i) les permittivités relatives ε et μ sont constantes (ε=1 et μ=1)
ii) ρ et $\vec{j}$ charges et courants sont nuls.

2 "Introduction à l'Optique de Fourier et à l'holographie", **Goodman,** (Masson)

I.2. Le théorème intégral d'Helmholtz et Kirchhoff

Le modèle de la diffraction d'une onde scalaire est basé sur les 2 relations suivantes :

a) l'équation de Helmholtz qui régit la propagation des ondes : $\Delta U + k^2 U = 0$

b) le théorème de Green : $\iiint_V \left(\Delta U \cdot G - U \cdot \Delta G \right) dv = \iint_{\Sigma_V} \left(\frac{\partial U}{\partial n} G - U \frac{\partial G}{\partial n} \right) ds$ où

U et G sont deux fonctions complexes de l'espace et

V, un volume délimité par une surface fermée $\Sigma_V = \{\Sigma \cup \Sigma_R\}$

Les dérivées partielles des fonctions U et G dans la direction de la normale extérieure à $\sum_V$ sont données par :

$$\frac{\partial G}{\partial n} = \vec{\nabla} G \cdot \vec{n} \quad \text{et} \quad \frac{\partial U}{\partial n} = \vec{\nabla} U \cdot \vec{n}$$

Des expressions (a) et (b), il a été démontré le théorème intégral de Helmholtz et Kirchhoff[3]. Dans cette démonstration, Kirchhoff utilise une fonction de Green *G* qui n'est autre que l'expression mathématique d'une onde scalaire et monochromatique, sphérique et divergente émise par le point P'.

$$G(P) = \frac{e^{ikPP'}}{PP'}$$

Cette onde vérifie l'équation de Helmholtz : $\Delta G + k^2 G = 0$.

En substituant dans l'expression du théorème de Green les laplaciens de G et U par leurs valeurs :

$$\Delta G = -k^2 G \quad \text{et} \quad \Delta U = -k^2 U$$

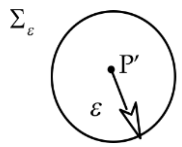

et en supposant que le point P' est entouré d'une surface sphérique de rayon ε que l'on fait tendre vers 0 pour s'affranchir de la singularité au point P', on montre que l'intégrale de volume est nulle d'où :

$$\iint_{\Sigma} \left(\frac{\partial U}{\partial n} G - U \frac{\partial G}{\partial n} \right) ds + \iint_{\Sigma_R} \left(\frac{\partial U}{\partial n} G - U \frac{\partial G}{\partial n} \right) ds + \iint_{\Sigma_\varepsilon} \left(\frac{\partial U}{\partial n} G - U \frac{\partial G}{\partial n} \right) ds = 0$$

Le calcul de l'intégrale sur la petite surface de rayon ε ayant pour valeur limite -4πU(P')
on obtient finalement :

$$\boxed{U(P') = \frac{1}{4\pi} \iint_{\Sigma} \left(\frac{\partial U}{\partial n} G - U \frac{\partial G}{\partial n} \right) ds}$$

Cette dernière équation est connue sous le nom de **théorème intégral d'Helmholtz et Kirchhoff** où Σ_V représente l'union des surfaces Σ et Σ_R .

---

[3] Voir Goodman J.W. : "Introduction à l'Optique de Fourier et à l'holographie " (Masson) page 33.

Le théorème intégral a été utilisé Helmholtz en acoustique et Kirchhoff l'a étendu au problème de la diffraction d'une onde électromagnétique par une ouverture pratiquée dans une surface plane.

I.3. Le modèle de Kirchhoff.

Une portion de la surface Σ_V contient une région plane Σ (Fig. I-1) dans laquelle se situe la région diffractante S.

Pour résoudre le problème posé et dans le but de simplifier l'expression du théorème intégral de Helmholtz et Kirchhoff, on impose au point P' d'être suffisamment éloigné de la surface diffractante S

$$PP' >> \lambda \qquad \text{Condition (1)}$$

ce qui permet de simplifier l'expression du gradient normal de la fonction G :

$$\frac{\partial G}{\partial n} = \vec{\nabla} G \cdot \vec{n} = \left(ik - \frac{1}{PP'} \right) \frac{e^{ikPP'}}{PP'} \cos\left(\vec{n} \cdot \overrightarrow{P'P} \right)$$

sous la forme suivante :

$$\frac{\partial G}{\partial n} \approx ik \cdot G \cdot \cos\left(\vec{n} \cdot \overrightarrow{P'P} \right)$$

Avec cette première condition, l'expression du théorème intégral d'Helmholtz et Kirchhoff s'écrit :

$$U(P') \cong \frac{1}{4\pi} \iint_{\Sigma} G \left(\frac{\partial U}{\partial n} - ikU \cos\left(\vec{n} \cdot \overrightarrow{P'P} \right) \right) ds$$

Pour restreindre le calcul de l'intégrale à la région de la surface diffractante intéressante S, on utilise la condition de rayonnement de Sommerfeld pour montrer que l'intégrale sur $\sum_R$ est nulle.

$$\lim_{R \to \infty} R \left(\frac{\partial U}{\partial n} - ikU \right) = 0 \qquad \text{Condition (2)}$$

Cette deuxième condition exprime le fait que le champ U doit s'annuler à l'infini au moins aussi vite qu'une onde sphérique divergente, hypothèse physiquement tout à fait acceptable. On peut par conséquent, affirmer que la contribution à l'intégrale de la surface Σ_R centrée sur le point P' est nulle et restreindre ainsi l'intégration à la surface plane Σ contenant la région diffractante S.

$$\boxed{U(P') \cong \frac{1}{4\pi} \iint_{\Sigma} \frac{e^{ikPP'}}{PP'} \left(\frac{\partial U}{\partial n} - ikU \cos\left(\vec{n} \cdot \overrightarrow{P'P} \right) \right) ds}$$

L'inconvénient majeur de ce modèle réside dans le fait qu'il est nécessaire de connaître U sur la surface diffractante mais aussi ses dérivées pour calculer U(P'). Pour résoudre cette intégrale, on utilise classiquement l'approximation qui consiste à négliger l'influence de l'ouverture diffractante sur le champ U au point P ce qui revient à identifier le champ U(P) au champ incident $U_i(P)$ évalué au point P en l'absence de toute structure matérielle diffractante.

Application.
Dans le cas uniquement où le champ incident est une onde sphérique issue d'un point source P_O tel que :

$$U(P) \cong U_i(P) = \frac{e^{ik \cdot P_o P}}{P_o P}$$

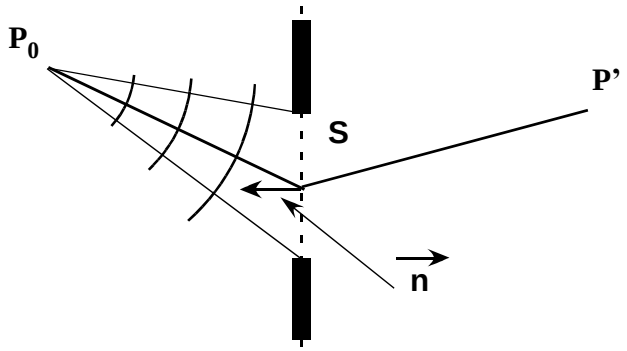

et suffisamment éloigné de S pour que :

$$\frac{\partial U}{\partial n} \approx -ik \cdot U \cdot \cos\left(\vec{n} \cdot \vec{PP_o}\right)$$

on obtient la formule de diffraction dite de **Fresnel-Kirchhoff** :

$$\boxed{U(P') \cong -\frac{i}{\lambda} \iint_{\Sigma} \frac{e^{ik(P_o P)}}{P_o P} \frac{e^{ik(PP')}}{PP'} \left(\frac{\cos\left(\vec{n} \cdot \overrightarrow{P'P}\right) + \cos\left(\vec{n} \cdot \overrightarrow{PP_o}\right)}{2} \right) ds}$$

I.4. Le modèle de Rayleigh et Sommerfeld

I.4.1. La fonction de Green de Sommerfeld.

Pour lever certaines ambiguïtés mathématiques et tout particulièrement celle qui veut que si le champ U et ses dérivées sont nuls sur une portion de $\sum_V$ alors le champ U doit être nul partout dans le demi espace de droite, Sommerfeld a proposé d'utiliser une autre fonction de Green qui a l'avantage d'être nulle sur S et son prolongement à l'infini $\sum_0$

$$G(P) = \frac{e^{ikPP'}}{PP'} - \frac{e^{ikPP''}}{PP''}$$

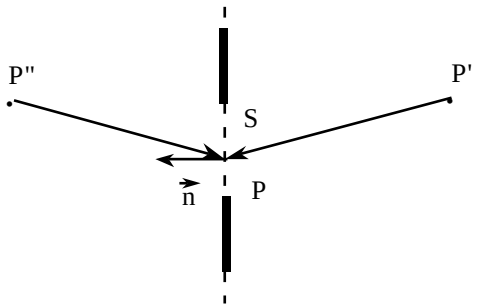

Cette fonction de Green correspond à la différence de deux ondes sphériques divergentes centrées respectivement au point P' et au point P'' symétrique de P' par rapport au plan passant par S.

Cette fonction de Green n'impose plus à la dérivée normale du champ d'être nulle en même temps que U en dehors de S.

Grâce à cette nouvelle fonction de Green, l'expression du théorème intégral d'Helmholtz et Kirchhoff se simplifie :

$$U(P') \approx \frac{1}{4\pi}\iint_{\Sigma_V}\left(G\frac{\partial U}{\partial n} - U\frac{\partial G}{\partial n}\right)ds \;=\; -\frac{1}{4\pi}\iint_{\Sigma_V} U\frac{\partial G}{\partial n}ds$$

Σ_V représente l'union des surfaces Σ et Σ_R .
Dans cette expression, seule l'expression de U intervient au point P quelque soit la valeur prise par sa dérivée en ce point.

I.4.2. La formule de diffraction de Rayleigh et Sommerfeld.

Connaissant l'expression donnant la valeur de la dérivée normale de G par rapport à la normale à la surface Σ :

$$\frac{\partial G}{\partial n} = \vec{\nabla} G \cdot \vec{n} = \left(ik - \frac{1}{PP'}\right)\frac{e^{ikPP'}}{PP'}2\cos\left(\vec{n}, \overrightarrow{P'P}\right)$$

et en supposant que le point P' est assez loin de la surface diffractante pour utiliser la condition PP' >> λ, la dérivée normale de G s'écrit :

$$\frac{\partial G}{\partial n} \cong ik\frac{e^{ikPP'}}{PP'}2\cos\left(\vec{n}, \overrightarrow{P'P}\right)$$

L'utilisation de la condition de rayonnement de Sommerfeld permet là encore de restreindre le calcul de l'intégrale sur Σ_V à Σ. Cette intégrale donnant la valeur du champ au point P' prend alors la forme suivante qui ne dépend plus que de la valeur du champ au point P :

$$\boxed{U(P') \approx -\frac{i}{\lambda}\iint_{\Sigma} U(P)\frac{e^{ikPP'}}{PP'}\cos\left(\vec{n}, \overrightarrow{P'P}\right)ds}$$

Cette formule établie par **Rayleigh et Sommerfeld** est à la base de l'optique de Fourier.

On appelle $\mathbf{h_0(P, P')}$, la fonction de pondération qui intervient dans cette intégrale. Elle est définie comme suit :

$$\boxed{h_o(P, P') = -\frac{i}{\lambda}\frac{e^{ikPP'}}{PP'}\cos\left(\vec{n}, \overrightarrow{P'P}\right)}$$

Le calcul du champ au point P' est une intégrale de superposition que l'on peut encore écrire sous la forme :

$$\boxed{U(P') = \iint_{\Sigma} U(P)\cdot h_0(P', P)\,ds}$$

Ce modèle décrit correctement la plupart des expériences de diffraction lorsque les dimensions de S sont grandes devant λ. Elle a pu être vérifiée tout particulièrement dans le cas des micro-ondes (λ = qq. cm).

Facteur d'obliquité

Lorsque l'approximation scalaire est justifiée, *ce que l'on admettra par la suite*, l'angle d'ouverture θ' du cône d'auscultation est faible pour pouvoir considérer θ comme constant en première approximation autour d'une valeur θ_0 uniquement fonction de la position du point **P'**. Avec cette condition, le terme en $\cos(\theta)$ qui dépend de cette inclinaison, peut être sorti de l'intégrale de Rayleigh et Sommerfeld.

On appelle **facteur d'obliquité** le terme $\cos(\theta_0)$ fonction de l'angle de champ θ_0.

$$\boxed{U(P') = \frac{i}{\lambda} \cdot \cos(\theta_0) \iint_{\Sigma} U(P) \cdot \frac{e^{ikPP'}}{PP'} \cdot dS}$$

Dans le cas de l'optique paraxiale, l'angle de champ θ_0 peut être considéré comme suffisamment petit pour que son cosinus soit pris égal à 1. L'approximation faite revient à surestimer l'importance de la contribution du champ U(P) au point P' lorsque l'angle θ devient important. Une erreur relative de l'ordre de 5% est faite quand l'angle θ atteint 18°.

Remarque : Dans le cas où la structure diffractante (réseau de diffraction) entraîne une forte déviation des faisceaux, la valeur réelle de θ_0 est très différente de 0 et est fonction de l'ordre de diffraction. Par conséquent, il faut vérifier que l'état de la polarisation des faisceaux électromagnétiques diffractés est encore compatible avec l'approximation scalaire des ondes ce qui est vrai en mode TE mais à vérifier en mode TM et que le cône d'auscultation est suffisamment étroit pour sortir de l'intégrale le facteur d'obliquité.

I.5. La transformée de Fresnel.

I.5.1. Introduction

L'intégrale de Rayleigh et Sommerfeld est une intégrale difficile à calculer d'une façon générale. Cependant, lorsque certaines hypothèses sont introduites, limitant bien sûr la généralité du modèle, l'intégrale prend une forme plus simple permettant de nombreux calculs analytiques car l'opération à effectuer revient soit à calculer une convolution, soit à calculer une transformée de Fourier.

I.5.2. Système de coordonnées utilisées et notations

La figure suivante donne la description du système de coordonnées qui sera utilisé par la suite. L'axe des z est en général orienté dans le sens de propagation de la lumière sauf indication contraire.

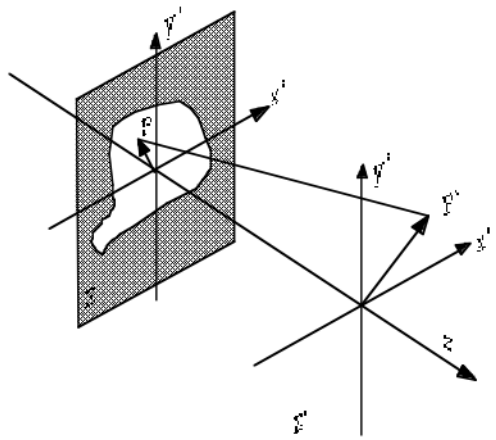

Notation relative à la transformée de Fourier :

$$\tilde{t}(\vec{\sigma}) = \iint_{\Re^2} t(\vec{r}) e^{-i2\pi\vec{r}\vec{\sigma}} d^2 r \quad \Leftrightarrow \quad \tilde{t}(\vec{r}) = \iint_{\Re^2} t(\vec{\sigma}) e^{+i2\pi\vec{r}\vec{\sigma}} d^2 \sigma$$

$$\vec{\sigma} \left| \begin{array}{l} \sigma_x \\ \sigma_y \end{array} \right. \qquad [\sigma] = [L]^{-1}$$

I.5.3. L'approximation de Fresnel

Dans l'approximation scalaire des ondes électromagnétiques et dans le cadre de l'optique paraxiale le cosinus de l'angle θ_0 peut être considéré voisin de 1. Par ailleurs, comme l'angle d'ouverture θ' est faible, la distance PP' varie peu lorsque P décrit S. La quantité PP' peut donc être sortie de l'intégrale et considérée en première approximation égale à la distance d séparant les deux plans Σ et Σ'. Compte tenu des notations utilisées, l'intégrale prend alors la forme suivante :

$$U(\vec{r}') = -\frac{i}{\lambda d} \cdot \iint_{\Sigma} U(\vec{r}) \cdot e^{ikPP'} \cdot d^2 r$$

De même, comme la phase de l'exponentielle est proportionnelle à la quantité PP', cette dernière quantité peut être remplacée par un développement limité.

$$PP' = \sqrt{d^2 + (\vec{r}' - \vec{r})^2} = d\sqrt{1 + \frac{(\vec{r}' - \vec{r})^2}{d^2}} = d\sqrt{1 + \tan^2(\theta)}$$

$$PP' = d \cdot \left(1 + \frac{1}{2}\tan^2(\theta) - \frac{1}{8}\tan^4(\theta) + \cdots\cdots + \varepsilon\left(\tan^2(\theta)\right)\right)$$

L'approximation de Fresnel consiste à ne garder du développement de PP' que le terme du premier ordre en $\tan^2(\theta)$: $\quad PP' \approx d \cdot \left(1 + \frac{1}{2}\tan^2(\theta)\right)$

ce qui conduit à une évaluation simplifiée de la phase φ = kPP' :

$$\varphi \approx kd\left(1 + \frac{1}{2}\tan^2(\theta)\right) = kd + \pi\frac{(\vec{r} - \vec{r}')^2}{\lambda d}$$

L'erreur de phase $\Delta\varphi$ qui est introduite dans l'évaluation de la phase φ, peut être évaluée par la valeur du terme du deuxième ordre dans le développement de PP' en $\tan^2(\theta)$:

$$\Delta\varphi \approx -2\pi\frac{d}{\lambda}\left(\frac{1}{8}\tan^4(\theta)\right)$$

Cette erreur de phase doit être petite pour que l'approximation de Fresnel soit valable. On considère que cette erreur de phase est négligeable lorsque $\Delta\varphi$ est inférieure à π/2. (Pour une discussion plus approfondie du rôle de la région ou la phase est stationnaire, on pourra se reporter à l'appendice III du Born et Wolf)

Dans la figure suivante, l'erreur de phase est calculée pour un rapport d/λ égal à 1000. La courbe en trait plein donne la différence de phase entre l'expression exacte et sa valeur développée au premier ordre ; la courbe en pointillé donne la valeur du premier terme négligé dans le développement de $\Delta\varphi$. Dans cet exemple, on constate que pour un angle θ supérieur à 12°, l'erreur de phase dépasse $\pi/2$.

Par ailleurs, l'évaluation de l'erreur par le terme du second ordre en $\tan^2$ est suffisante.

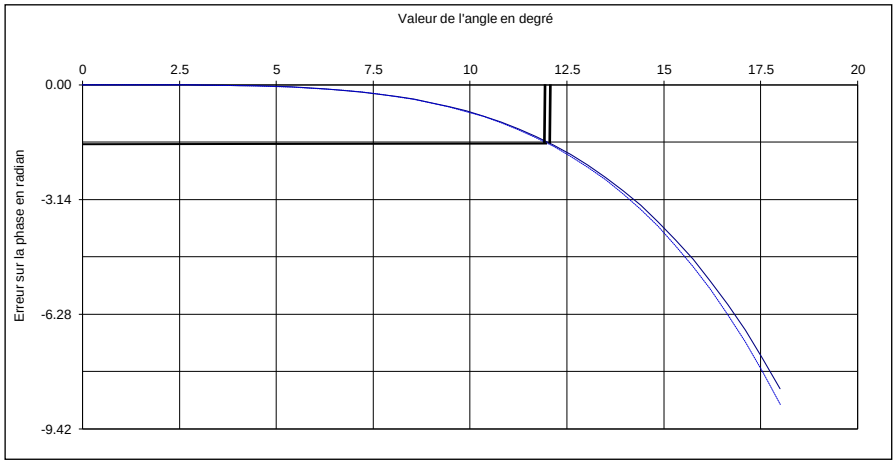

I.5.4. L'intégrale de Fresnel

Expression de l'intégrale

Dans ces conditions, l'intégrale de Rayleigh et Sommerfeld s'écrit sous la forme suivante, appelée **intégrale de Fresnel** :

$$U(\vec{r}\,', z+d) = -\frac{i}{\lambda d}\cdot e^{ikd}\cdot \iint_{\Re^2} U(\vec{r}, z)\cdot e^{i\pi\frac{(\vec{r}-\vec{r}\,')^2}{\lambda d}}\cdot d^2 r$$

Intégrale de Fresnel ou transformée de Fresnel

Cette intégrale de superposition revient à calculer la convolution de deux fonctions :

- la première exprime la valeur du champ au point P de la surface diffractante
- la seconde correspond au développement au premier ordre d'une onde sphérique divergente centrée sur le point P. On retrouve ainsi l'expression du principe d'Huygens Fresnel.

L'approximation de Fresnel consiste donc à assimiler la surface de l'onde sphérique à une portion de front d'onde parabolique. Cette approximation est valable lorsque la contribution de U dans la direction θ devient négligeable pour un écart de phase $\Delta\varphi$ non négligeable entre la sphère et la parabole.

La propagation de l'onde dans l'espace libre séparant les plans $\sum$ et $\sum'$ peut alors s'écrire sous la forme plus condensée suivante :

$$U(\vec{r}', z+d) = \left[U(\vec{r}, z) * h(\vec{r})\right]_{(\vec{r}')} \quad \text{avec} \quad h(\vec{r}) = -\frac{i}{\lambda d}\cdot e^{ikd}\cdot e^{i\cdot\pi\cdot\frac{r^2}{\lambda d}}$$

Cette intégrale peut encore s'écrire sous la forme d'une transformée de Fourier :

$$U(\vec{r}\,', z+d) = -\frac{i}{\lambda d}\cdot e^{ikd}\cdot e^{i\pi\frac{(\vec{r}\,')^2}{\lambda d}}\cdot \iint_{\Re^2}\left(U(\vec{r}, z)\cdot e^{i\pi\frac{(\vec{r})^2}{\lambda d}}\right)\cdot e^{-i2\pi\frac{\vec{r}\cdot\vec{r}'}{\lambda d}}\cdot d^2 r$$

Annexe 2

Rappels d'analyse de Fourier

I. Préliminaire

Notation de la transformée de Fourier :

$$\tilde{f}(\sigma_x) = \int_{-\infty}^{+\infty} f(x)\exp(+i2\pi x\sigma_x)dx \qquad f(x) = \int_{-\infty}^{+\infty} \tilde{f}(\sigma_x)\exp(-i2\pi x\sigma_x)d\sigma_x$$

I.1. Variables de l'espace réel et de l'espace réciproque

Transformée de Fourier d'une fonction complexe à 2 variables réelles :

$$f(x,y) = \int_{-\infty}^{+\infty}\iiint \tilde{f}(\sigma_x,\sigma_y)\exp\left(-i2\pi\left(x\sigma_x + y\sigma_y\right)\right)d\sigma_x d\sigma_y$$

I.2. Fonction rectangle

Définition	Expression de sa transformée
$\mathrm{rect}\left(\frac{x}{\ell}\right)\left\vert\begin{matrix}1\ si\ \lvert x\rvert < \frac{\ell}{2}\\ 0\ si\ \lvert x\rvert > \frac{\ell}{2}\end{matrix}\right.$ Sans dimension	$\ell\cdot\mathrm{sinc}(\ell\sigma_x) = \ell\cdot\frac{\sin(\pi\ell\sigma_x)}{\pi\ell\sigma_x}$ Homogène à [x]
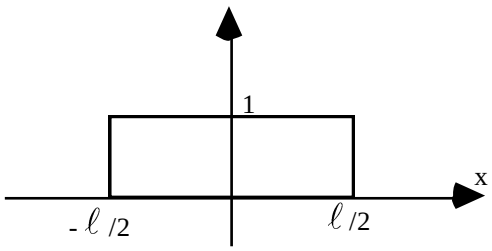	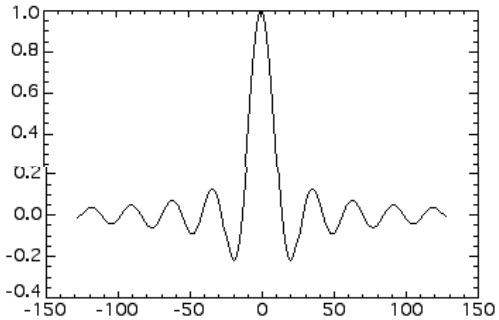 Premier zéro pour : $\pi\ell\sigma_x = \pi$

I.3. Fonction disque

Définition	Expression de sa transformée
$\mathrm{Dis}\left(\frac{\vec{r}}{r_0}\right) = \begin{vmatrix} 1\, si\ r < r_0 \\ 0\, si\ r > r_0 \end{vmatrix} \qquad r = \sqrt{\left(x^2 + y^2\right)}$ Sans dimension	$\pi r_0^2 \cdot \frac{2J_1\left(2\pi\, r_0 \sigma\right)}{\left(2\pi\, r_0 \sigma\right)} \qquad \sigma = \sqrt{\left(\sigma_x^2 + \sigma_y^2\right)}$ Homogène à $[r]^2$
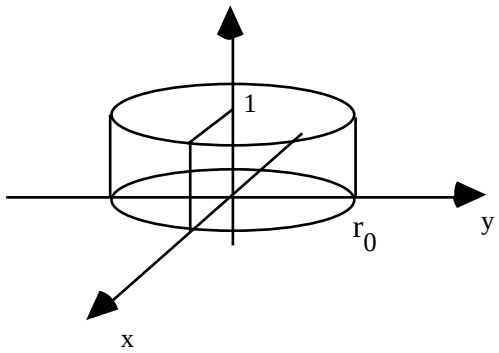	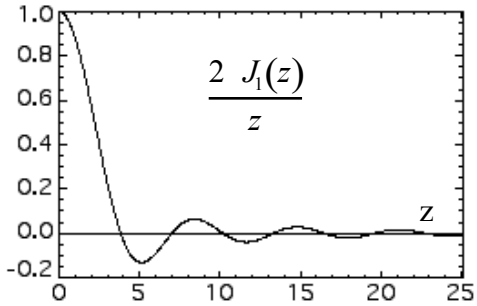 Premier zéro pour : $1.22\pi = 2\pi r_0 \sigma$

I.4. Distribution de Dirac

Définition	Expression de sa transformée
$\delta(x)$ $\delta(x - x_0)$ Homogène à $[x]^{-1}$	1 $\exp\left(-i2\pi\, x_0\, \sigma_x\right)$ Sans dimension
$\delta(ax) = \frac{1}{a}\delta(x)$ Homogène à $[a]^{-1}[x]^{-1}$	$\frac{1}{a}$ Homogène à $[a]^{-1}$
$\int f(x)\delta(x - x_0)dx = f(x - x_0)$ Homogène à [f]	$\tilde{f}(\sigma_x) \cdot \exp\left(-i2\pi\, x_0\, \sigma_x\right)$ Homogène à [f][x]

I.5. Fonction trigonométrique

Définition	Expression de sa transformée
$\cos(2\pi\sigma_0 x)$	1 $\frac{1}{2}\left[\delta(\sigma_x+\sigma_0)+\delta(\sigma_x-\sigma_0)\right]$

I.6. Peigne de Dirac

Définition	Expression de sa transformée
$\frac{1}{p}\text{Ш}\left(\frac{x}{p}\right)=\sum_n \frac{1}{p}\delta\left(\frac{x}{p}-n\right)$ $=\sum_n \delta(x-np)$ Homogène à $[x]^{-1}$	$\text{Ш}(p\sigma_x)=\sum_n \delta(p\sigma_x-n)$ $=\sum_n \frac{1}{p}\delta\left(\sigma_x-\frac{n}{p}\right)$ Sans dimension

I.7. Fonction f périodisée au pas p

Définition	Expression de sa transformée
$\left[f(x)*\frac{1}{p}\text{Ш}\left(\frac{x}{p}\right)\right]=\sum_n f(x-np)$ Homogène à [f]	$\tilde{f}(\sigma_x)\text{Ш}(p\sigma_x)=\tilde{f}(\sigma_x)\sum_n\left(\frac{1}{p}\delta\left(\sigma_x-\frac{n}{p}\right)\right)$ $=\sum_n\left(\tilde{f}\left(\frac{n}{p}\right)\frac{1}{p}\delta\left(\sigma_x-\frac{n}{p}\right)\right)$ Homogène à [f][x]

I.8. Fonction f échantillonnée au pas p

Fonction f échantillonnée au pas p

Définition	Expression de sa transformée
$f(x)\frac{1}{p}\text{Ш}\left(\frac{x}{p}\right)=f(x)\sum_n\delta(x-np)$ $=\sum_n f(np)\delta(x-np)$ Homogène à $[f][x]^{-1}$	$\tilde{f}(\sigma_x)*\text{Ш}(p\sigma_x)=\tilde{f}(\sigma_x)*\sum_n\delta(p\sigma_x-n)$ $=\sum_n\frac{1}{p}\tilde{f}\left(\sigma_x-\frac{n}{p}\right)$ Homogène à [f]

I.9. Fonction gaussienne

I.9.1. Gaussienne réelle

A une dimension

Définition	Expression de sa transformée de Fourier
$\exp\left(-\pi\left(\frac{t}{\tau}\right)^2\right)$ Sans dimension	$\tau\cdot\exp\left(-\pi\tau^2\nu^2\right)$ Homogène à [t]

A deux dimensions

Définition	Expression de sa transformée de Fourier
$\exp\left(-\pi\left(\frac{r}{r_0}\right)^2\right)=\exp\left(-\pi\frac{x^2+y^2}{r_0^2}\right)$ Sans dimension	$r_0^2e^{-\pi r_0^2\sigma^2}=r_0^2\exp\left(-\pi r_0^2\left(\sigma_x^2+\sigma_y^2\right)\right)$ Homogène à [x]2

I.9.2. Gaussienne complexe

A une dimension

Définition	Expression de sa transformée de Fourier
$e^{-i\pi\left(\frac{x}{x_0}\right)^2}=\exp\left(-\pi\left(\frac{x}{x_0\cdot e^{-i\frac{\pi}{4}}}\right)^2\right)$ Sans dimension	$x_0\cdot e^{-i\frac{\pi}{4}}\cdot e^{i\pi x_0^2\sigma_x^2}$ Homogène à [x]

A deux dimensions

Définition	Expression de sa transformée de Fourier
$e^{-i\pi\left(\frac{r}{r_0}\right)^2}=\exp\left(-\pi\frac{x^2+y^2}{\left(r_0\cdot e^{-i\frac{\pi}{4}}\right)^2}\right)$ Sans dimension	$r_0^2e^{-i\frac{\pi}{2}}\exp\left(i\pi r_0^2\sigma^2\right)=-ir_0^2e^{i\pi r_0^2\left(\sigma_x^2+\sigma_y^2\right)}$ Homogène à $[x]^2$

I.10. Fonction Heavyside

Définition	Expression de sa transformée
$Hea(x)=\left\vert\begin{matrix}+1 & x>0\\ 0 & x<0\end{matrix}\right.$ sans dimension	$\frac{1}{2}\delta(\sigma_x)-\frac{i}{2\pi\sigma_x}$ Homogène à [x]

I.11. Fonction lorentzienne

Définition	Expression de sa transformée
$f(x)=\left\vert\begin{matrix}e^{-\frac{x}{a}} & x\geq 0\\ 0 & x<0\end{matrix}\right.$ sans dimension	$\tilde{f}(\sigma_x)=\frac{a}{1+i2\pi\, a\sigma_x}$ $Lor(\sigma_x)=\left\vert\frac{a}{1+i2\pi\, a\sigma_x}\right\vert^2=\frac{a^2}{1+(2\pi\, a\sigma_x)^2}$ Homogène à [x]
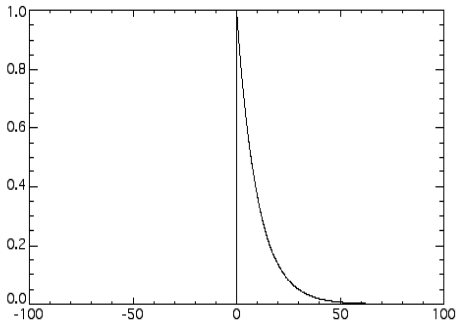	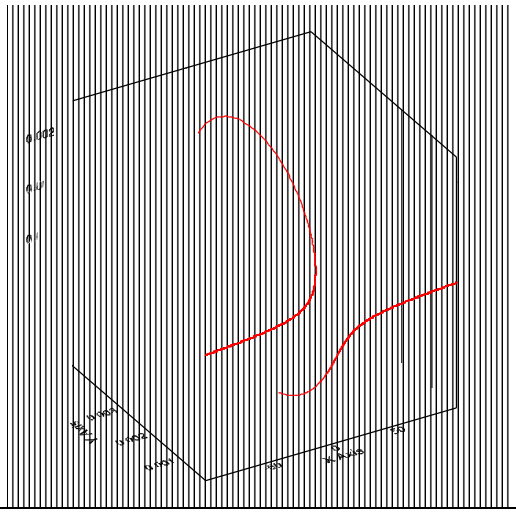

Rappel : Soient f et g deux fonctions complexes à variables réelles.

<u>Convolution</u> : $$f(x) * g(x) = \int_R f(x_1)\, g(x - x_1)\, dx_1$$

$$TF\left\{ f(x) * g(x) \right\} = \tilde{f}(\sigma_x).\tilde{g}(\sigma_x)$$

<u>Corrélation</u> : $$f(x) \otimes g(x) = \int_R f(x_1)\, g^*(x_1 - x)\, dx_1$$

$$TF\left\{ f(x) \otimes g(x) \right\} = \tilde{f}(\sigma_x)\, \tilde{g}^*(\sigma_x)$$

Exercices d’Optique de Fourier

TD1 : Propagation d'un faisceau Gaussien

On considère une onde monochromatique se propageant selon l'axe z. L'amplitude complexe de l'onde dans le plan $z = 0$ est :

$U(r,0) = e^{-\left(\frac{r}{w_0}\right)^2}$, où w_0 est le rayon du faisceau.

- Montrer que dans le plan $z = d$, l'amplitude complexe de l'onde s'écrit

$$U(r,d) = \frac{\pi w_0^2 e^{-jkd}}{\left(\pi w_0^2 - j\lambda d\right)} e^{-\left(\frac{r}{w}\right)^2} e^{-j\pi\frac{r^2}{\lambda R}}$$

avec

$$w^2 = w_0^2\left[1+\left(\frac{\lambda d}{\pi w_0^2}\right)^2\right],$$ w étant le rayon du faisceau

$$R = d\left[1+\left(\frac{\pi w_0^2}{\lambda d}\right)^2\right],$$ R étant le rayon de courbure du front d'onde

- Montrer que le rayon de courbure R du front d'onde a une valeur minimale à la distance $d = d_r$ (distance de Rayleigh). Tracer l'évolution de R au cours de la propagation de l'onde.

- Quelle est la valeur de R pour $d = d_r$?

- Quelle est la puissance totale transportée par l'onde ?

- Que vaut cette puissance si on limite la taille du faisceau à un disque de rayon w ?

- Tracer l'évolution de la taille du faisceau w au cours de la propagation

- Etablir l'expression de la divergence du faisceau pour $d >> d_r$

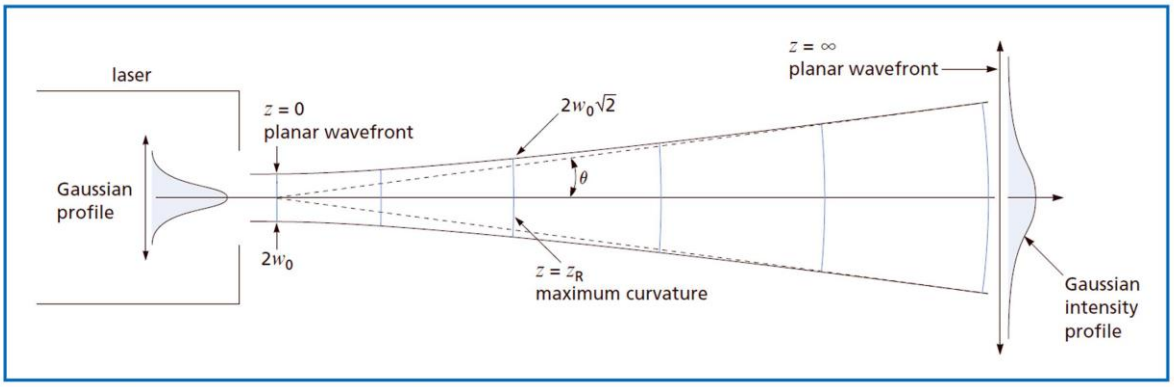

Changes in wavefront radius with propagation distance

Référence : https://cvimellesgriot.com/Products/Documents/TechnicalGuide/Gaussian-Beam-Optics.pdf

On note $Z = d$, $Z_R = \dfrac{\pi w_0^{\,2}}{\lambda}$.

Le rayon complexe de l'onde Gaussienne est defini comme : $\dfrac{1}{q} = \dfrac{1}{R} - j\dfrac{\lambda}{\pi w^2}$.

- Montrer que l'amplitude complexe $U(r,d)$ de l'onde peut s'écrire comme :

$$U(r,Z) = \frac{Z_R}{Z_R - jZ}\exp(-jkZ)\exp\left(-j\pi\frac{r^2}{\lambda q}\right)$$
$$= \frac{\exp\left(j\arctan\left(\dfrac{Z}{Z_R}\right)\right)}{\sqrt{1+\dfrac{Z^2}{Z_R^{\,2}}}}\exp(-jkZ)\exp\left(-j\pi\frac{r^2}{\lambda q}\right)$$

- Comparer la phase de l'onde Gaussienne à la phase d'une onde plane de même longueur d'onde se propageant selon l'axe z.

- Comment varie la phase de l'onde Gaussienne entre $z = -Z_R$ and $z = +Z_R$?

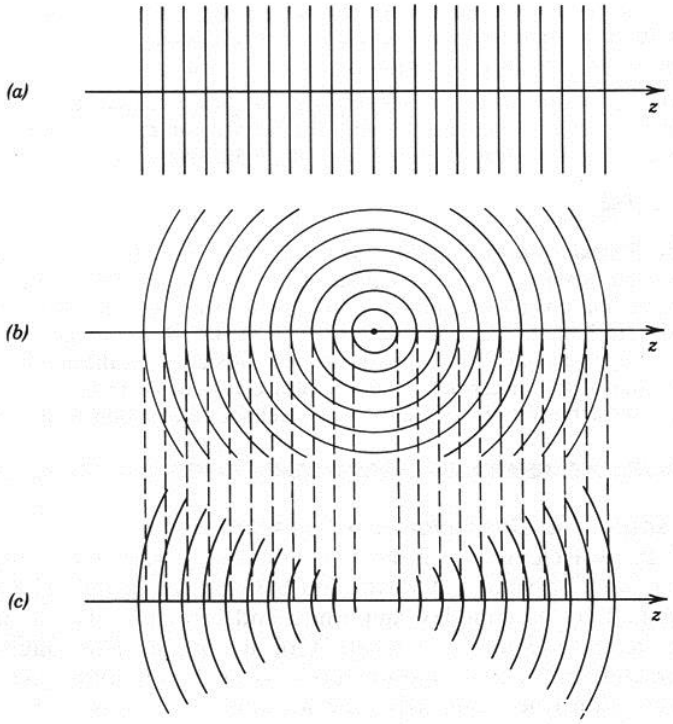

Wavefronts of (*a*) a uniform plane wave; (*b*) a spherical wave; (*c*) a Gaussian beam. At points near the beam center, the Gaussian beam resembles a plane wave. At large z the beam behaves like a spherical wave except that the phase is retarded by 90° (shown in this diagram by a quarter of the distance between two adjacent wavefronts).

Référence : Fundamentals of Fhotonics", B.E.A. Saleh &M.C. Teich, Wiley Series in Pure and Applied Optics, J.W. Goodman Editor, Wiley-Interscience publication (1991)

TD 2 : Diffraction par une ouverture circulaire

Une étoile est observée avec un télescope constitué d'une lentille ayant une focale de 1 m (f' = 1 m) et une ouverture de diamètre $2r_0$ = 45 mm. La lumière émise par l'étoile comporte 3 longueurs d'onde :

$$\lambda_r = 620 \text{ nm} \quad \lambda_v = 540 \text{ nm} \quad \lambda_b = 465 \text{ nm}$$

La lentille du telescope est supposée mince et dénuée de toute aberration.

On considère que la pupille du telescope se situe dans le plan de la lentille en z = 0. Cette pupille circulaire, centrée sur l'axe optique, est décrite par :

$$p(x,y) = Disc\left(\frac{\vec{r}}{r_0}\right) \quad \text{with} \quad \|\vec{r}\| = \sqrt{x^2+y^2}$$

Amplitude dans le plan focal

L'amplitude complexe de l'onde optique émise par l'étoile s'écrit, dans le plan de la pupille :

$$U(x,y,z=0) = U_0 \exp\left[-j\left(k_x x + k_y y\right)\right]$$

avec

$$k_x = \frac{2\pi}{\lambda}\sin\theta\cos\phi \quad \text{and} \quad k_y = \frac{2\pi}{\lambda}\sin\theta\sin\phi$$

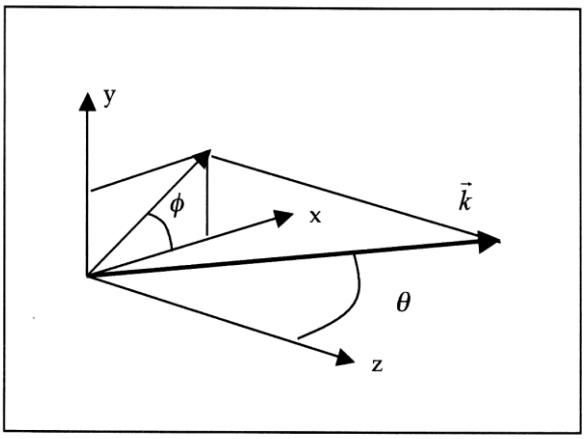

- Donner l'expression de l'amplitude $U(x', y', z)$ dans un plan quelconque situé à $z = d$ derrière la lentille.
- Quels sont l'amplitude et l'éclairement dans le plan focal de la lentille (en $z = f'$)? Calculer les coordonnées du centre de l'image.

Amplitude suivant l'axe optique

On suppose maintenant que l'angle θ est nul. On note $z = f' + \varepsilon$, avec $\varepsilon << f'$.

- Calculer l'amplitude et l'éclairement le long de l'axe optique z en fonction de la quantité :

$$B = \frac{1}{\lambda}\left(\frac{1}{f'} - \frac{1}{f'+\varepsilon}\right) \approx \frac{\varepsilon}{\lambda f'^2}$$

- Montrer que l'amplitude de l'onde s'annule en deux points situés de part et d'autre du foyer.
- Déduire l'expression de la profondeur de champ du télescope en fonction de la longueur d'onde. Calculer la profondeur de champ pour les 3 longueurs d'onde λ_r, λ_g, λ_b
- Est-il possible que l'amplitude de l'onde s'annule le long de l'axe optique dans le cas où l'étoile observée émet une lumière de spectre large ?

TD 3 : DIFFRACTION – FILTRAGE SPATIAL

L'image d'un réseau de phase est observée sur un écran au moyen du dispositif experimental représenté ci-dessous.

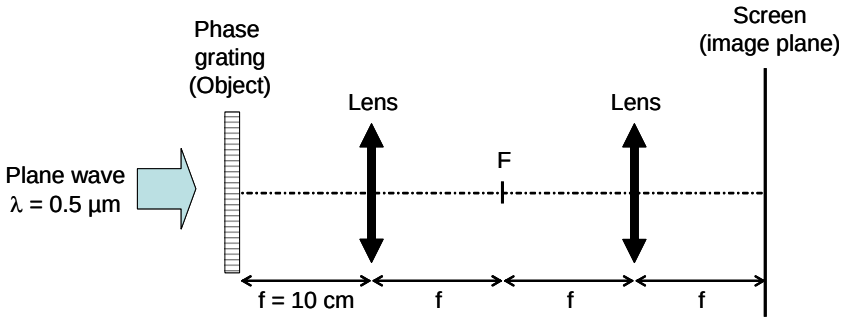

La transmittance du réseau de phase peut s'écrire comme :

$t(x) = \exp\left[i\varphi(x)\right]$ où $\varphi(x) = \varphi_0 \cos(2\pi x / p)$ [p = 10 µm , φ_0 = 0.01]

1. Donner l'expression de l'amplitude complexe de l'onde optique dans le plan de Fourier, en considérant que $\varphi_0 \ll 1$.
2. Donner les caractéristiques principales de l'image (éclairement, contraste, fréquences spatiales) observée sur l'écran lorsqu'on place dans le plan de Fourier et centré sur l'axe optique :
   - Une fente de largeur 1,5 cm
   - Une fente de largeur 1 mm
   - Une fente de largeur 1,5 cm + un disque opaque de diamètre 1 mm
   - Une fente de largeur 1,5 cm + une lame quart d'onde absorbante de diamètre 1 mm et dont le module de la transmittance vaut t = 0.01

TD 4 : IMAGERIE EN ÉCLAIRAGE INCOHÉRENT

Un réseau de diffraction sinusoidal de périod p_0 est observé au moyen d'un objectif de focal f = 50 mm situé à 1,05 m du réseau. L'objectif, assimilé à une lentille mince, est supposé exempt de toute aberration. L'ouverture de l'objectif est supposée égale à f/10 et la longueur d'onde λ = 0,5 µm. L'éclairage est supposé <u>incohérent spatialement</u>.
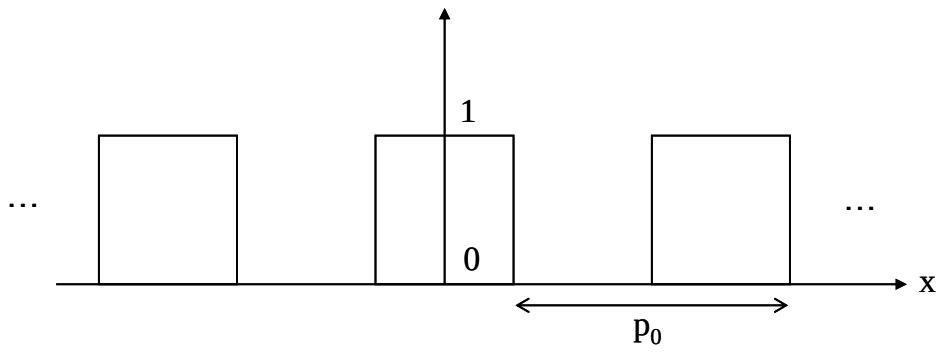
1. Quelle est l'image parfaite (image géométrique) du réseau ? Où se situe-t-elle ?
2. Donner l'expression de la réponse percussionnelle (h_{inc}) de l'objectif. *Pour simplifier, on traitera le problème en ne considérant qu'une seule dimension transverse (x).*
3. Donner l'expression de la fonction de transfert (H_{inc}) de l'objectif.
4. Ecrire la répartition d'éclairement dans le plan image.
5. Quel est le contraste de l'image du réseau quand p_0 = 400µm, 200µm, 20µm ?
6. Calculer la répartition d'éclairement dans le plan de l'image dans le cas d'un réseau de transmittance binaire (transmittance représentée ci-dessous, avec p_0 = 200µm)