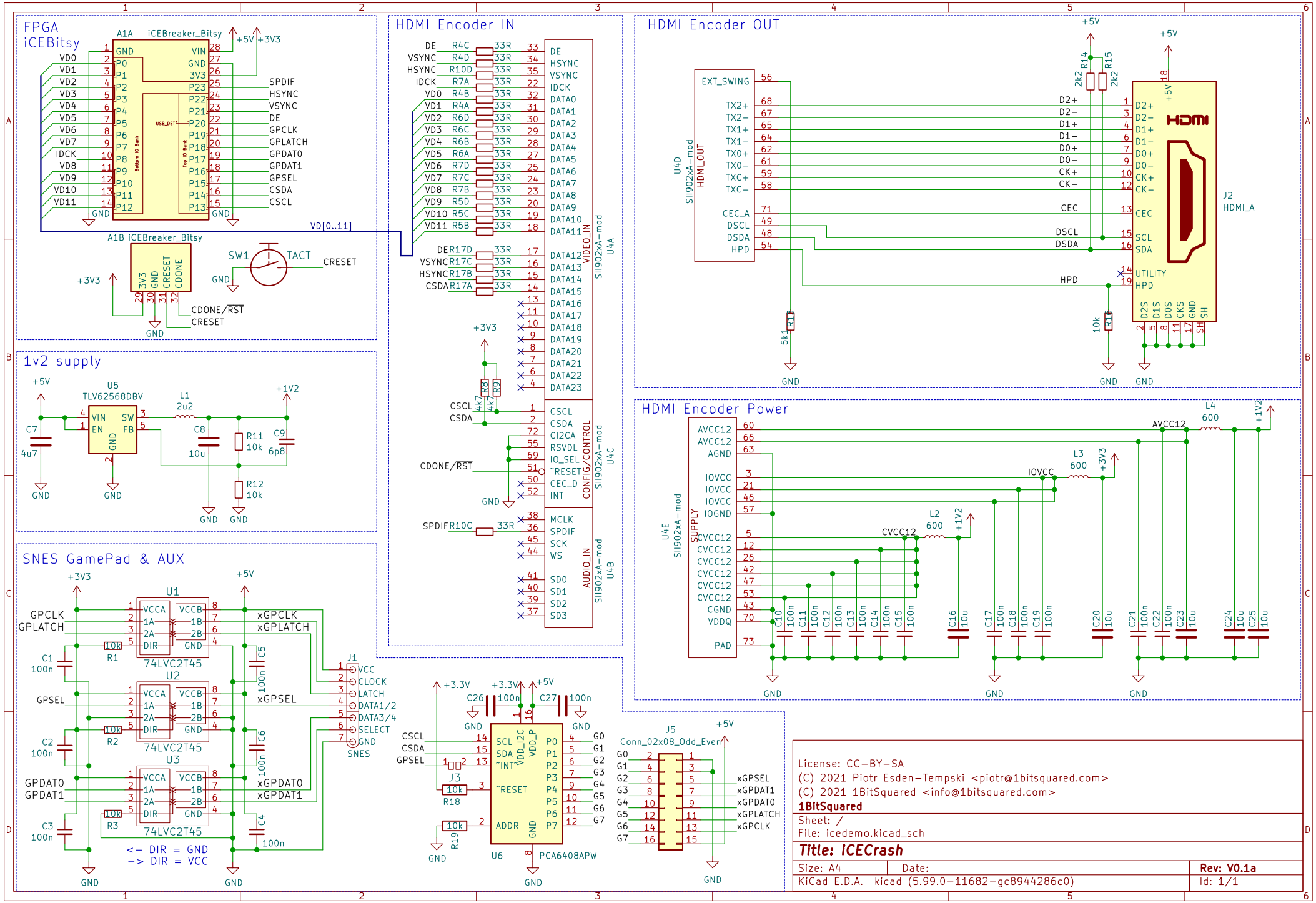
FPGA iCEBitsy
A1A iCEBreaker_Bitsy
A1B iCEBreaker_Bitsy
VD[0..11]
SPDIF
HSYNC
VSYNC
DE
GPCLK
GPLATCH
GPDAT0
GPDAT1
GPSEL
CSDA
CSCL
CDONE/RST
CRESET
SW1
TACT
1v2 supply
U5
TLV62568DBV
L1
2u2
+1V2
SNES GamePad & AUX
U1
U2
U3
74LVC2T45
xGPCLK
xGPLATCH
xGPSEL
xGPDAT0
xGPDAT1
J1
VCC
CLOCK
LATCH
DATA1/2
DATA3/4
SELECT
GND
SNES
<- DIR = GND
-> DIR = VCC
HDMI Encoder IN
U4A
U4C
U4B
VIDEO_IN
CONFIG/CONTROL
AUDIO_IN
SII902xA-mod
J3
U6
PCA6408APW
J5
Conn_02x08_Odd_Even
HDMI Encoder OUT
U4D
HDMI_OUT
EXT_SWING
CEC_A
J2
HDMI_A
HDMI Encoder Power
U4E
SUPPLY
AVCC12
IOVCC
CVCC12
L3
600
L4
600
L2
600
License: CC-BY-SA
(C) 2021 Piotr Esden-Tempski <piotr@1bitsquared.com>
(C) 2021 1BitSquared <info@1bitsquared.com>
1BitSquared
Sheet: /
File: icedemo.kicad_sch
Title: iCECrash
Size: A4
Date:
Rev: V0.1a
KiCad E.D.A. kicad (5.99.0-11682-gc8944286c0)
Id: 1/1