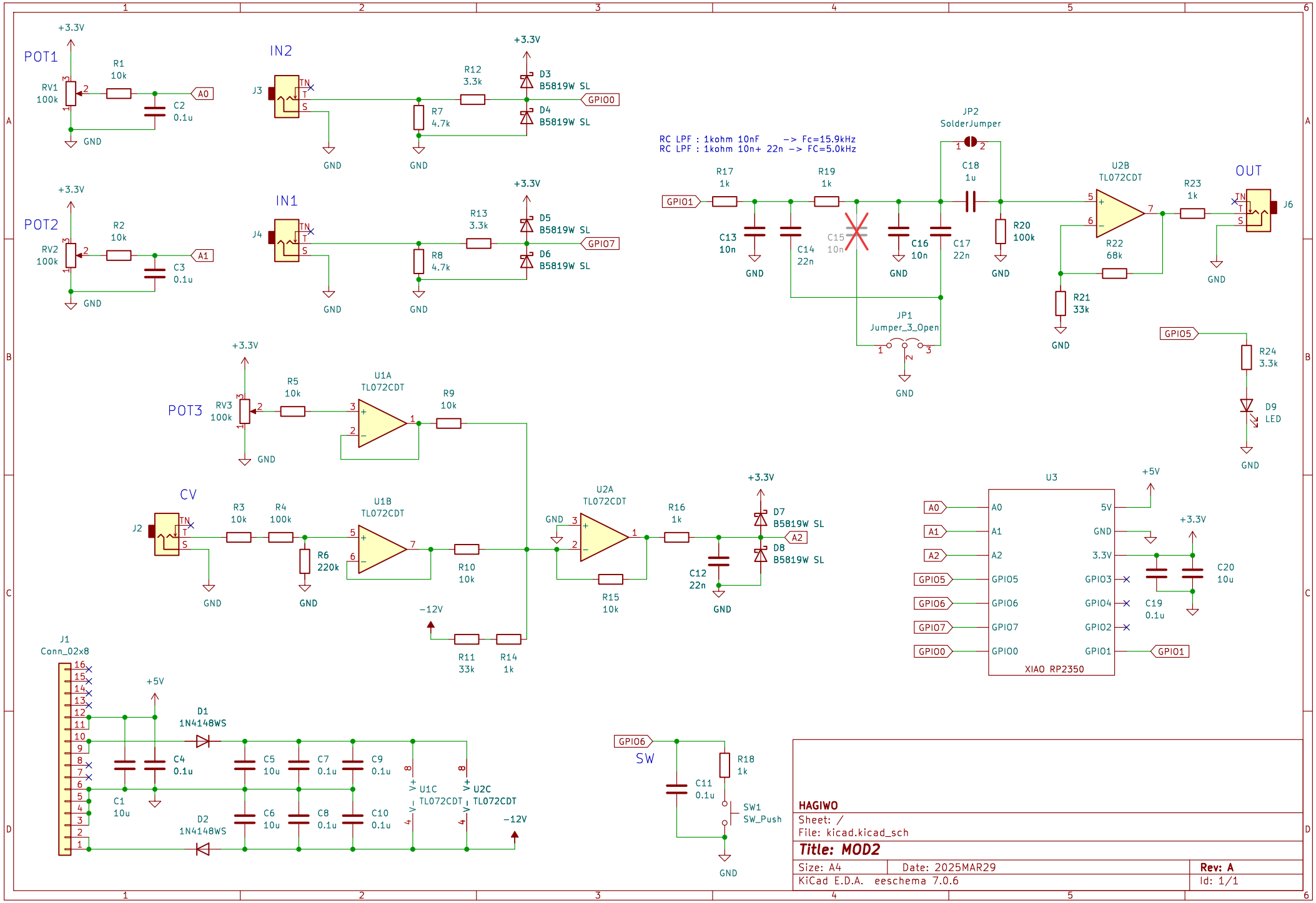
POT1
+3.3V
RV1 100k
R1 10k
C2 0.1u
A0
GND
IN2
J3
R7 4.7k
R12 3.3k
D3 B5819W SL
D4 B5819W SL
GPIO0
POT2
RV2 100k
R2 10k
C3 0.1u
A1
IN1
J4
R8 4.7k
R13 3.3k
D5 B5819W SL
D6 B5819W SL
GPIO7
RC LPF : 1kohm 10nF -> Fc=15.9kHz
RC LPF : 1kohm 10n+ 22n -> FC=5.0kHz
GPIO1
R17 1k
R19 1k
C13 10n
C14 22n
C15 10n
C16 10n
C17 22n
C18 1u
JP2 SolderJumper
R20 100k
JP1 Jumper_3_Open
U2B TL072CDT
R22 68k
R21 33k
R23 1k
OUT
J6
GPIO5
R24 3.3k
D9 LED
POT3
RV3 100k
R5 10k
U1A TL072CDT
R9 10k
CV
J2
R3 10k
R4 100k
R6 220k
U1B TL072CDT
R10 10k
-12V
R11 33k
R14 1k
U2A TL072CDT
R15 10k
R16 1k
C12 22n
D7 B5819W SL
D8 B5819W SL
A2
U3
XIAO RP2350
A0
A1
A2
GPIO5
GPIO6
GPIO7
GPIO0
5V
GND
3.3V
GPIO3
GPIO4
GPIO2
GPIO1
+5V
C19 0.1u
C20 10u
J1 Conn_02x8
D1 1N4148WS
D2 1N4148WS
C1 10u
C4 0.1u
C5 10u
C6 10u
C7 0.1u
C8 0.1u
C9 0.1u
C10 0.1u
U1C TL072CDT
U2C TL072CDT
SW
C11 0.1u
R18 1k
SW1 SW_Push
HAGIWO
Sheet: /
File: kicad.kicad_sch
Title: MOD2
Size: A4
Date: 2025MAR29
Rev: A
KiCad E.D.A. eeschema 7.0.6
Id: 1/1