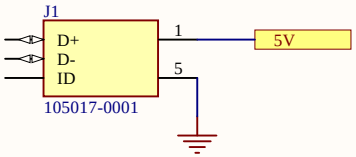

Title		
Size: A4	Number	Revision
Date: 23/05/2025		Sheet of
File: C:\Users\..\alimentation.SchDoc		Drawn By:

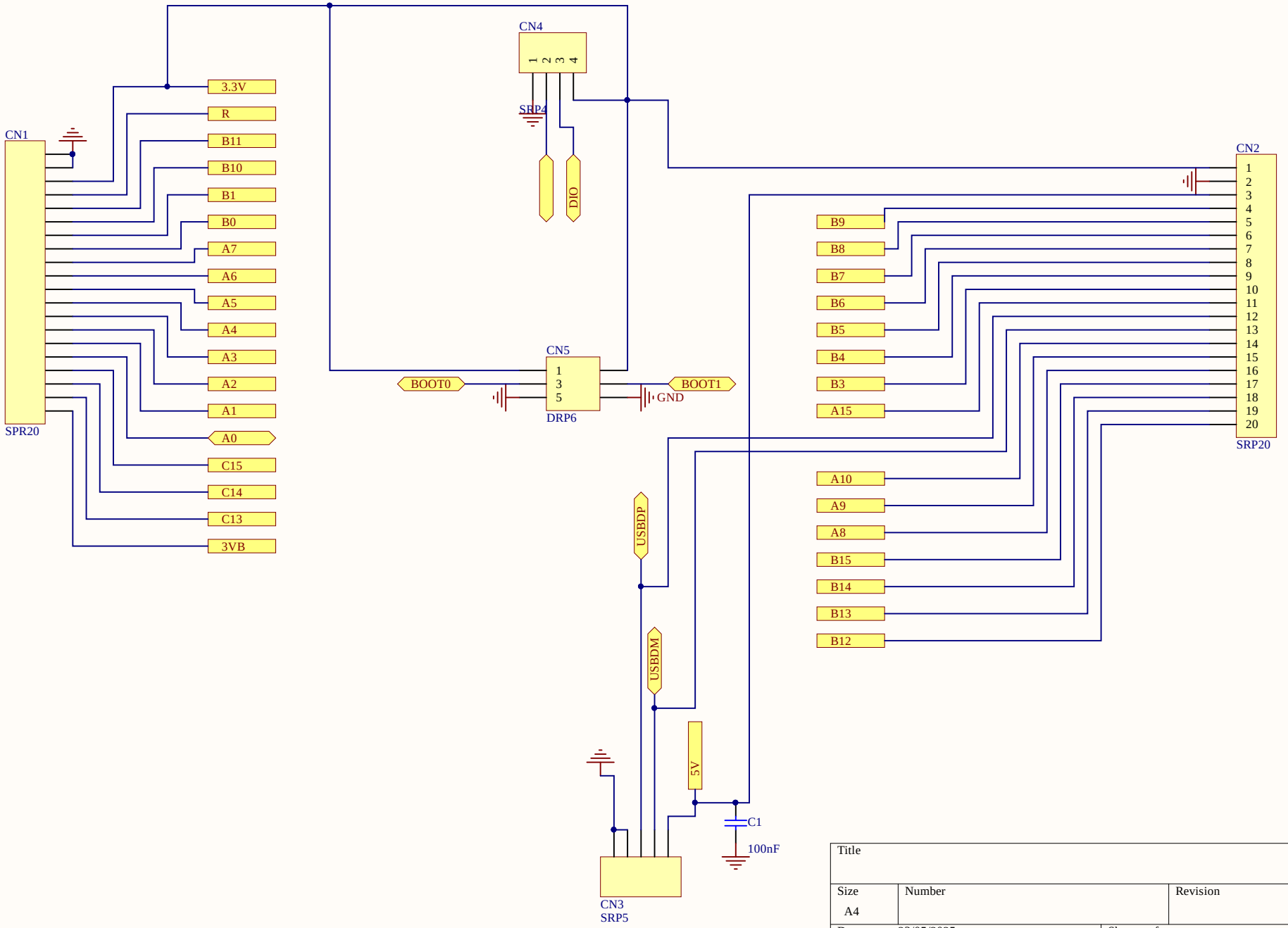
CN1
SPR20
3.3V
R
B11
B10
B1
B0
A7
A6
A5
A4
A3
A2
A1
A0
C15
C14
C13
3VB
CN4
SRP4
1
2
3
4
DIO
CN5
DRP6
1
3
5
BOOT0
BOOT1
GND
CN2
SRP20
1
2
3
4
5
6
7
8
9
10
11
12
13
14
15
16
17
18
19
20
B9
B8
B7
B6
B5
B4
B3
A15
A10
A9
A8
B15
B14
B13
B12
USBDP
USBDM
5V
C1
100nF
CN3
SRP5
Title
Size
A4
Number
Revision
Date:
23/05/2025
Sheet of
File:
C:\Users\..\connectors.SchDoc
Drawn By:

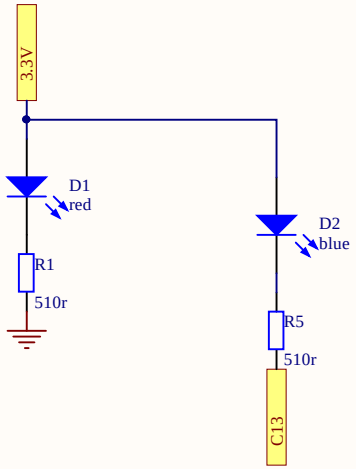

Title		
Size: A4	Number	Revision
Date: 23/05/2025		Sheet of
File: C:\Users\..\LEDs.SchDoc		Drawn By:

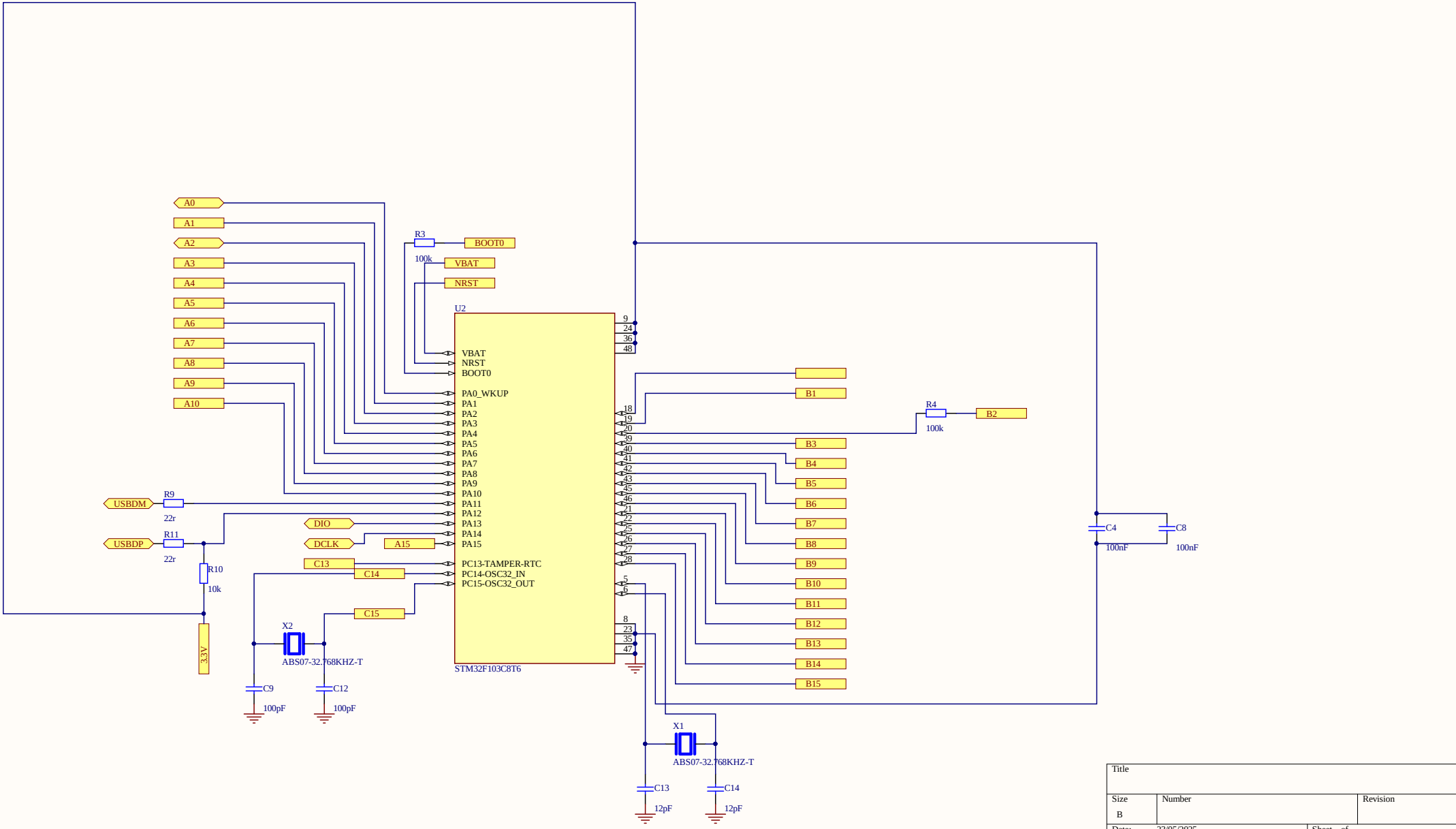
A0
A1
A2
A3
A4
A5
A6
A7
A8
A9
A10
R3
100k
BOOT0
VBAT
NRST
U2
VBAT
NRST
BOOT0
PA0_WKUP
PA1
PA2
PA3
PA4
PA5
PA6
PA7
PA8
PA9
PA10
PA11
PA12
PA13
PA14
PA15
PC13-TAMPER-RTC
PC14-OSC32_IN
PC15-OSC32_OUT
STM32F103C8T6
B1
B2
B3
B4
B5
B6
B7
B8
B9
B10
B11
B12
B13
B14
B15
R4
100k
C4
100nF
C8
100nF
USBDM
R9
22r
USBDP
R11
22r
R10
10k
3.3V
DIO
DCLK
A15
C13
C14
C15
X2
ABS07-32.768KHZ-T
C9
100pF
C12
100pF
X1
ABS07-32.768KHZ-T
C13
12pF
C14
12pF
Title
Size
B
Number
Revision
Date:
23/05/2025
Sheet of
File:
C:\Users\..\MPU.SchDoc
Drawn By:

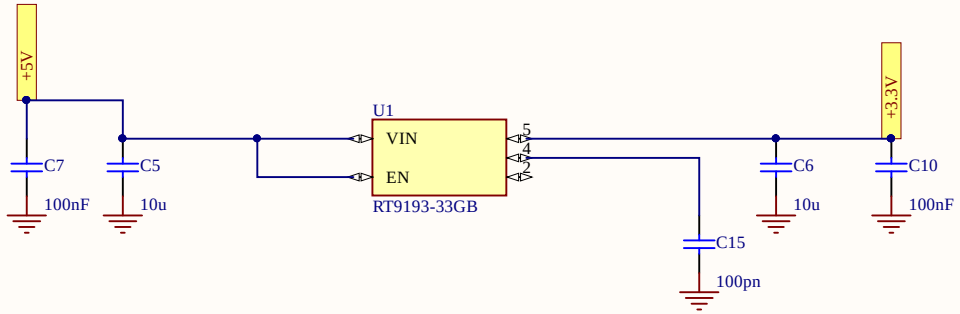

Title		
Size: A4	Number	Revision
Date: 23/05/2025		Sheet of
File: C:\Users\..\Power supply.SchDoc		Drawn By:

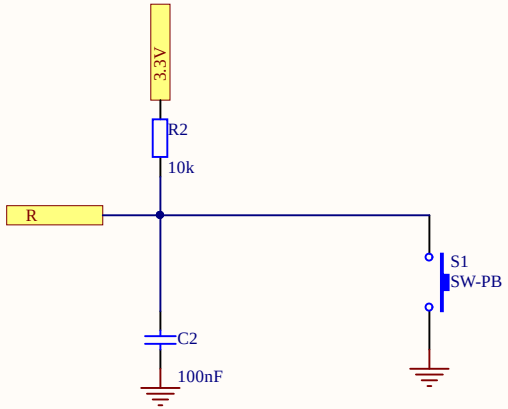

Title		
Size: A4	Number	Revision
Date: 23/05/2025		Sheet of
File: C:\Users\..\Reset.SchDoc		Drawn By:

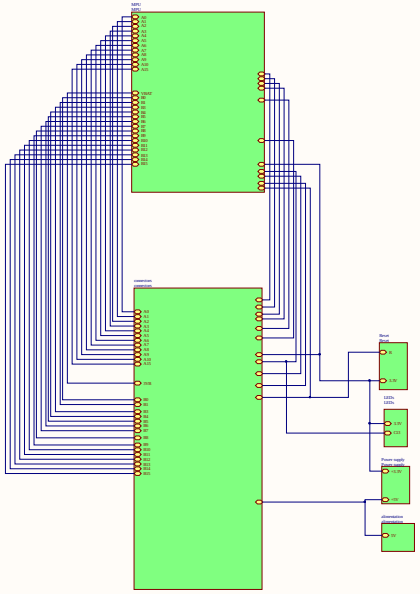

Title		
Size: Cloud-S	Number	Revision
Date: 2020-10-05		Sheet of
File: C:\Users\...\Sheet1.SCHDOC		Drawn By:

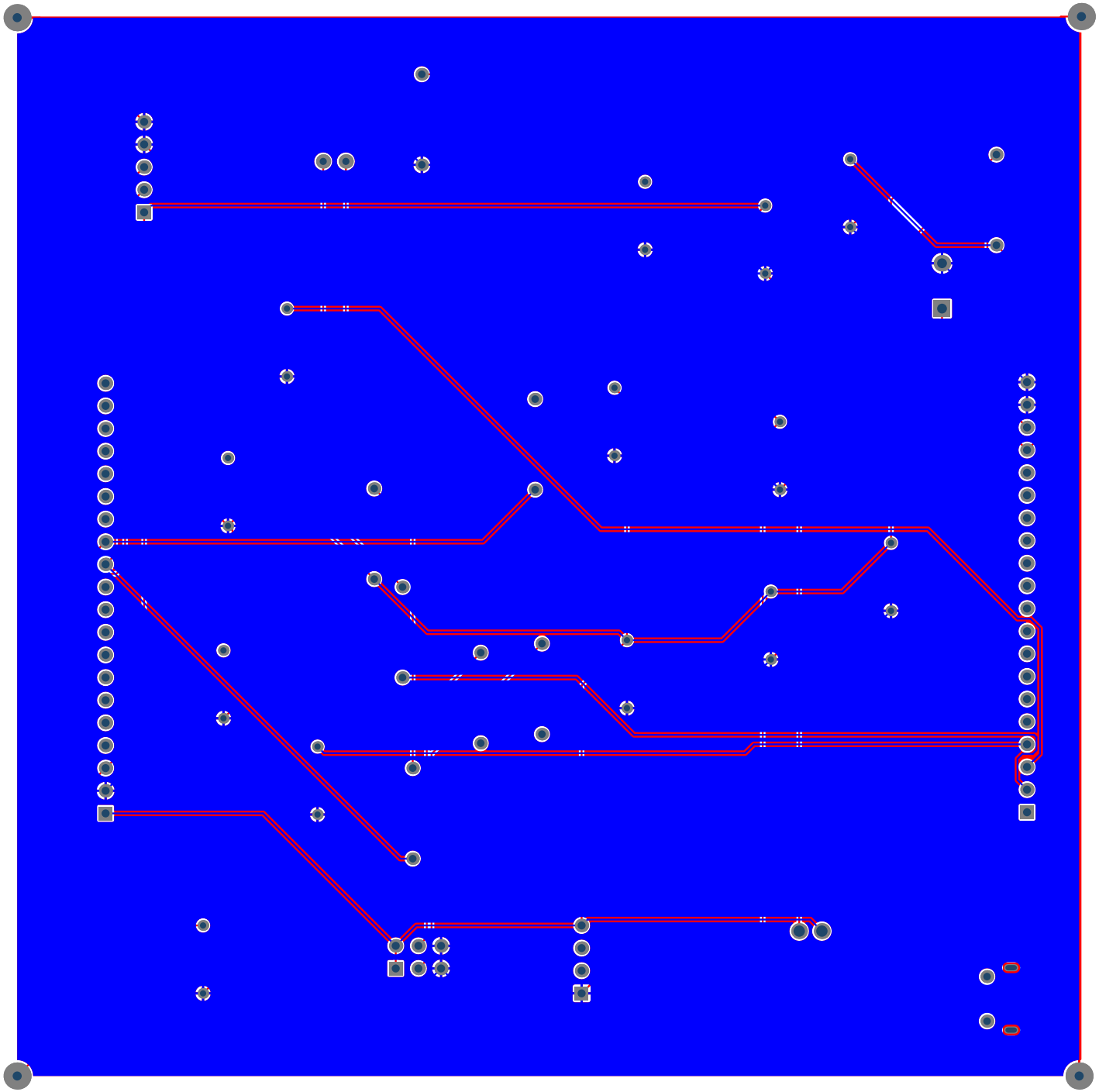

Item #	umn Name Error:Manufac	#Column Name Error:Manufacturer No	Quantity	#Column Name Error:Note	Designator	Description	Footprint	Comment	LibRef
1			13		C1, C2, C4, C5, C6, C7, C8, C9, C10, C12, C13, C14, C15	Capacitor	RAD-0.3		Cap
2			1		CN1	Header, 20-Pin	HDR1X20	SPR20	Header 20
3			1		CN2	Header, 20-Pin	HDR1X20	SRP20	Header 20
4			1		CN3	Header, 5-Pin	HDR1X5	SRP5	Header 5
5			1		CN4	Header, 4-Pin, Right Angle	HDR1X4H	SRP4	Header 4H
6			1		CN5	Header, 3-Pin, Dual row, Right Angle	HDR2X3H	DRP6	Header 3X2H
7			1		D1	Typical INFRARED GaAs LED	LED-0	red	LED0
8			1		D2	Typical RED GaAs LED	LED-1	blue	LED1
9			1		J1	ÐŸÐ¾Ð´Ð°Ð».; Ð¿ÐµÑ€ÐµÐ´Ð°Ñ‡Ð° Ð´Ð°Ð½Ð½Ñ‹Ñ…; USB; Ð¿Ñ€Ð¸ÐµÐ¼; Micro; Ñ‚Ð¸Ð¿ B; Ð½Ð¸Ð¶Ð½ÐµÐµ Ð°Ñ€ÐµÐ¿Ð»ÐµÐ½Ð¸Ðµ, SMT, Ñ Ð¿Ñ€Ð¸Ð¿Ð¾ÐµÐ¼, Ð±ÐµÐ· ÑÐ²Ð¸Ð½Ñ†Ð° : Molex Incorporated 105017-0001	MOLEX_105017-0001	105017-0001	105017-0001
10			8		R1, R2, R3, R4, R5, R9, R10, R11	Resistor	AXIAL-0.4		Res2
11			1		S1	Switch	SPST-2	SW-PB	SW-PB
12			1		U1	Linear Voltage Regulator IC Positive Fixed 1 Output 300mA SOT-23-5	SOT23-5_TEXAS_INSTRUMETNS	RT9193-33GB	RT9193-33GB
13			1		U2	ARM® Cortex®-M3 STM32F1 Microcontroller IC 32-Bit 72MHz 64KB (64K x 8) FLASH 48-LQFP (7x7)	QFP50P900X900X160-48N	STM32F103C8T6	STM32F103C8T6
14			2		X1, X2	32.768 kHz Â±20ppm Crystal 12.5pF 70 kOhms 2-SMD, No Lead	XTAL_ABS07-32.768KHZ-T	ABS07-32.768KHZ-T	ABS07-32.768KHZ-T