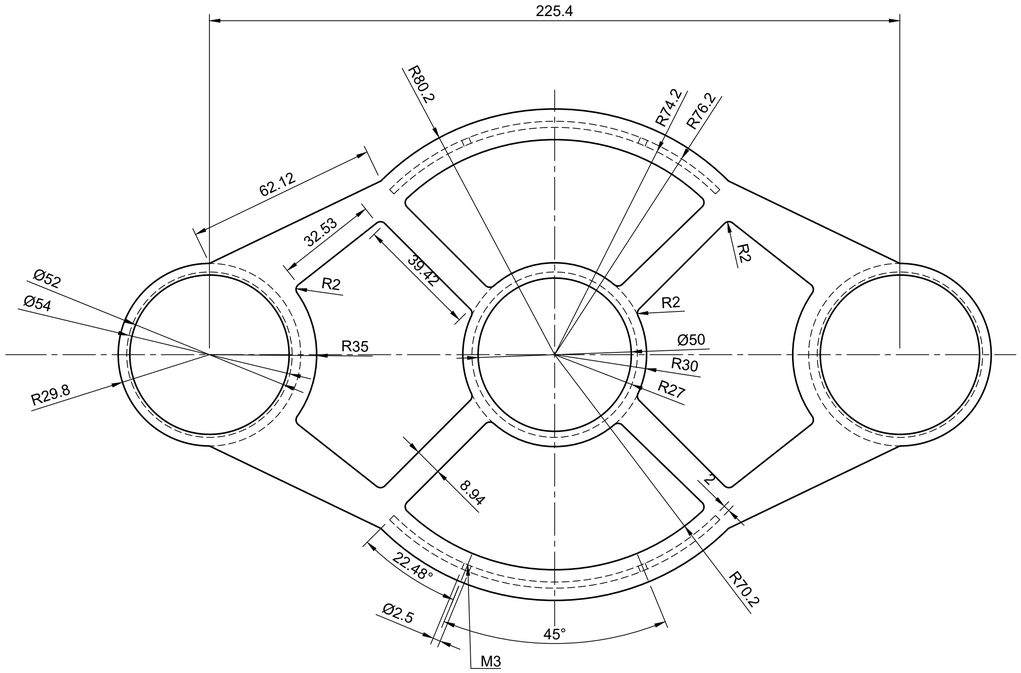

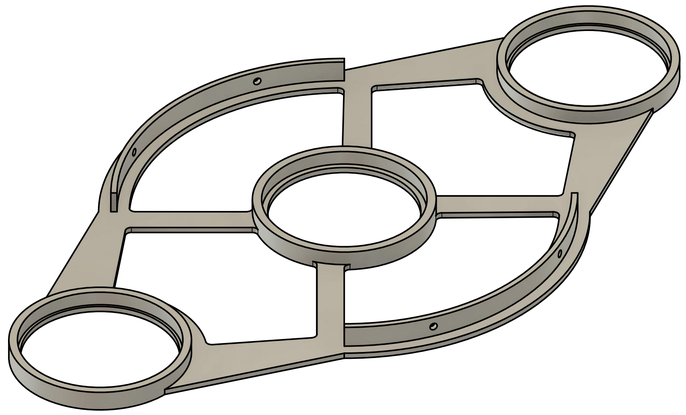

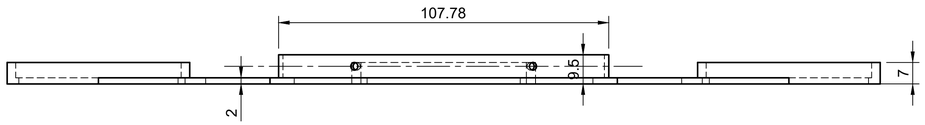

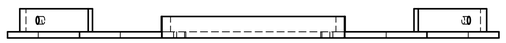

Dept.	Technical reference	Created by Yichen You 2022/7/12	Approved by
		Document type	Document status
		Title Engine stopper	DWG No.
			Rev. / Date of issue / Sheet 1/1